Google

Acerca de este libro

Esta es una copia digital de un libro que, durante generaciones, se ha conservado en las estanterías de una biblioteca, hasta que Google ha decidido escanearlo como parte de un proyecto que pretende que sea posible descubrir en línea libros de todo el mundo.

Ha sobrevivido tantos años como para que los derechos de autor hayan expirado y el libro pase a ser de dominio público. El que un libro sea de dominio público significa que nunca ha estado protegido por derechos de autor, o bien que el período legal de estos derechos ya ha expirado. Es posible que una misma obra sea de dominio público en unos países y, sin embargo, no lo sea en otros. Los libros de dominio público son nuestras puertas hacia el pasado, suponen un patrimonio histórico, cultural y de conocimientos que, a menudo, resulta difícil de descubrir.

Todas las anotaciones, marcas y otras señales en los márgenes que estén presentes en el volumen original aparecerán también en este archivo como testimonio del largo viaje que el libro ha recorrido desde el editor hasta la biblioteca y, finalmente, hasta usted.

Normas de uso

Google se enorgullece de poder colaborar con distintas bibliotecas para digitalizar los materiales de dominio público a fin de hacerlos accesibles a todo el mundo. Los libros de dominio público son patrimonio de todos, nosotros somos sus humildes guardianes. No obstante, se trata de un trabajo caro. Por este motivo, y para poder ofrecer este recurso, hemos tomado medidas para evitar que se produzca un abuso por parte de terceros con fines comerciales, y hemos incluido restricciones técnicas sobre las solicitudes automatizadas.

Asimismo, le pedimos que:

+ *Haga un uso exclusivamente no comercial de estos archivos* Hemos diseñado la Búsqueda de libros de Google para el uso de particulares; como tal, le pedimos que utilice estos archivos con fines personales, y no comerciales.
+ *No envíe solicitudes automatizadas* Por favor, no envíe solicitudes automatizadas de ningún tipo al sistema de Google. Si está llevando a cabo una investigación sobre traducción automática, reconocimiento óptico de caracteres u otros campos para los que resulte útil disfrutar de acceso a una gran cantidad de texto, por favor, envíenos un mensaje. Fomentamos el uso de materiales de dominio público con estos propósitos y seguro que podremos ayudarle.
+ *Conserve la atribución* La filigrana de Google que verá en todos los archivos es fundamental para informar a los usuarios sobre este proyecto y ayudarles a encontrar materiales adicionales en la Búsqueda de libros de Google. Por favor, no la elimine.
+ *Manténgase siempre dentro de la legalidad* Sea cual sea el uso que haga de estos materiales, recuerde que es responsable de asegurarse de que todo lo que hace es legal. No dé por sentado que, por el hecho de que una obra se considere de dominio público para los usuarios de los Estados Unidos, lo será también para los usuarios de otros países. La legislación sobre derechos de autor varía de un país a otro, y no podemos facilitar información sobre si está permitido un uso específico de algún libro. Por favor, no suponga que la aparición de un libro en nuestro programa significa que se puede utilizar de igual manera en todo el mundo. La responsabilidad ante la infracción de los derechos de autor puede ser muy grave.

Acerca de la Búsqueda de libros de Google

El objetivo de Google consiste en organizar información procedente de todo el mundo y hacerla accesible y útil de forma universal. El programa de Búsqueda de libros de Google ayuda a los lectores a descubrir los libros de todo el mundo a la vez que ayuda a autores y editores a llegar a nuevas audiencias. Podrá realizar búsquedas en el texto completo de este libro en la web, en la página `http://books.google.com`

This is a digital copy of a book that was preserved for generations on library shelves before it was carefully scanned by Google as part of a project to make the world's books discoverable online.

It has survived long enough for the copyright to expire and the book to enter the public domain. A public domain book is one that was never subject to copyright or whose legal copyright term has expired. Whether a book is in the public domain may vary country to country. Public domain books are our gateways to the past, representing a wealth of history, culture and knowledge that's often difficult to discover.

Marks, notations and other marginalia present in the original volume will appear in this file - a reminder of this book's long journey from the publisher to a library and finally to you.

Usage guidelines

Google is proud to partner with libraries to digitize public domain materials and make them widely accessible. Public domain books belong to the public and we are merely their custodians. Nevertheless, this work is expensive, so in order to keep providing this resource, we have taken steps to prevent abuse by commercial parties, including placing technical restrictions on automated querying.

We also ask that you:

+ *Make non-commercial use of the files* We designed Google Book Search for use by individuals, and we request that you use these files for personal, non-commercial purposes.

+ *Refrain from automated querying* Do not send automated queries of any sort to Google's system: If you are conducting research on machine translation, optical character recognition or other areas where access to a large amount of text is helpful, please contact us. We encourage the use of public domain materials for these purposes and may be able to help.

+ *Maintain attribution* The Google "watermark" you see on each file is essential for informing people about this project and helping them find additional materials through Google Book Search. Please do not remove it.

+ *Keep it legal* Whatever your use, remember that you are responsible for ensuring that what you are doing is legal. Do not assume that just because we believe a book is in the public domain for users in the United States, that the work is also in the public domain for users in other countries. Whether a book is still in copyright varies from country to country, and we can't offer guidance on whether any specific use of any specific book is allowed. Please do not assume that a book's appearance in Google Book Search means it can be used in any manner anywhere in the world. Copyright infringement liability can be quite severe.

About Google Book Search

Google's mission is to organize the world's information and to make it universally accessible and useful. Google Book Search helps readers discover the world's books while helping authors and publishers reach new audiences. You can search through the full text of this book on the web at `http://books.google.com/`

Stanford University Libraries
36105010180789

Digitized by Google

LELAND·STANFORD·JVNIOR·VNIVERSITY

Digitized by Google

Digitized by Google

Digitized by Google

Digitized by Google

SIXTH ANNUAL CONVENTION NATIONAL TELEPHONE ASSOCIASIO

41768

Telephone Magazine

VOL. XX CHICAGO, JULY, 1902 NO. 130

CONTENTS

Party Lines (Illustrated). By Max W. Zabel 1
A Fair Rate for Telephone Service 6
Receiver for Wireless Telegraphy 6
Independent Telephone Association of the United States—Sixth Annual Convention 7
Address of Hon. Samuel H. Ashbridge 7
Response to Mayor's Address by Hon. S. P. Sheerin 8
Annual Address by Hon. James M. Thomas 9
The Telephone Situation in the Northeast. By L. A. Goudy 14
"Where We Were and Where We Are." By Hon. L. J. Hackney 19
Address of Mrs. Anney McElroy Brett 22
Convention Notes 26
List of Delegates and Visitors 27
Upper Ohio Valley Notes. By W. G. Irwin 31
Editorial 32
The National Association 32
Bond Issue 32
Trade Note 32
Marvelous Growth of the Telephone 33
The Telephone Development 34
A Word About Poles to Investors 35
Telephone System Sold 35
Telephone Lines Absorbed 36
Regulating Telephone Charges 36
Long Distance Lines for Wisconsin 37
Telephone Franchise Sold 37
Talks and Cross Talks (Illustrated). By the Inspector 38
Postoffice Telephones 40
Monthly Digest of Telephone and Kindred Patents. Illustrated. By Arthur F. Durand 41
Farmers' Lines in Ohio 51
Permanent and Electro Magnets. (Illustrated). By F. A. Wegner 52
Rural Telephone Service. By William Gilbert Irwin 53
Needed Improvements in Independent Telephony. (Illustrated). By L. W. Stanton 55
Telephonic Communication With France 59
Business Changes 59
Louisiana Purchase Exposition. (Illustrated) 60
Where and When. (A Poem) 60
The Telephone Situation in the Northwest. By C. H. Judson 62
Bell Company in Trouble 65
New Indiana Telephone Company 66
Telephone Rates in Canada 66
Telephone News 67

PRICE, 10 CENTS.

Entered at the Chicago Post Office as Matter of the Second Class.

PHILADELPHIA, JUNE 24-25-26-190

Digitized by Google

THIS SPACE FOR SALE

197140

Digitized by Google

Weston Electrical Instrument Co.

Waverly Park, NEWARK, N. J., U. S. A.

PORTABLE
DIRECT READING

Voltmeters and Wattmeters

For Alternating and Direct Current Circuits.

The only standard portable instrument which deserves this name. Absolutely permanent, if not abused.

Portable Direct Reading

Voltmeters, Milli-Voltmeters. Ammeters, Milli-Ammeters.

PORTABLE DIRECT READING WATTMETER FOR ALTERNATING AND DIRECT CURRENTS.

A NEW CATALOGUE ON

Voltmeters, Potential Indicators, Ammeters

FOR

Central Stations AND Isolated Plants.

Highest Accurancy Least Consumption of Energy.

SEMI-PORTABLE LABORATORY STANDARD VOLTMETERS AND AMMETERS.

The most accurate and most convenient absolute standard ever offered.

Correspondence Solicited.

BERLIN—European Western Electrical Instrument Co., Ritterstrasse No. 88.

LONDON—Elliott Bros., No. 101 St. Martins Lane.

Nungesser Primary Batteries.

Our improved No. 4, 300 ampere-hour Closed Circuit Battery is the most powerful battery of this class. It is put up in both glass and porcelain jars. This battery is very largely used for telephone exchange service, central energy systems, gas and gasoline engine ignition, railway signals, etc.

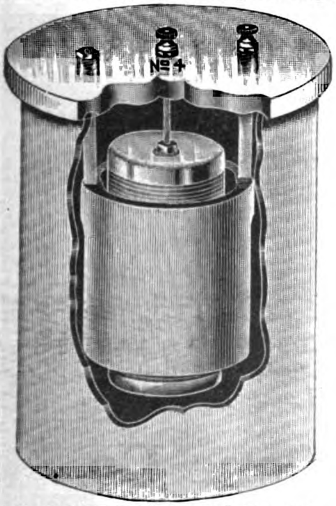

No. 4—SIZE 5½ in. dia. x 7½ in. high.

THE 1900 DRY BATTERY

Is manufactured Expressly for Telephone Exchange Service. In every comparative test made within the past four years, the 1900 Dry Battery has proven its superiority over all other dry or wet batteries. This battery has shown, in many of the most progressive telephone exchanges in this country, over there years' continuous service. without attention of any kind. They are now more largely used than all other dry or wet batteries combined.

OUR PRICES ARE THE LOWEST.

SIZE, 2½ in. dia. x 6 in. High.

MANUFACTURED BY THE

Nungesser Electric Battery Co.,

CLEVELAND, OHIO, U. S. A.

Western Representative, THOMAS G. GRIER, 126-130 Jackson Boulevard, Chicago, Ill.

Digitized by Google

American Electric Telephone Co.

MANUFACTURERS OF

Modern Telephone Apparatus

COMPRISING

Switchboards—**Multiple,**
for Central Energy or
Magneto Systems.

Toll-Line Boards
to meet the most exacting
requirements.

Protective Devices
simple, durable and
efficient.

Cable Terminals
With Improved Sneak Current
Protector and Carbon Arrester.

Distributing Boards

Lightning Arresters

Repeating Coils

and everything requisite for the
construction and equipment of a
TELEPHONE PLANT.

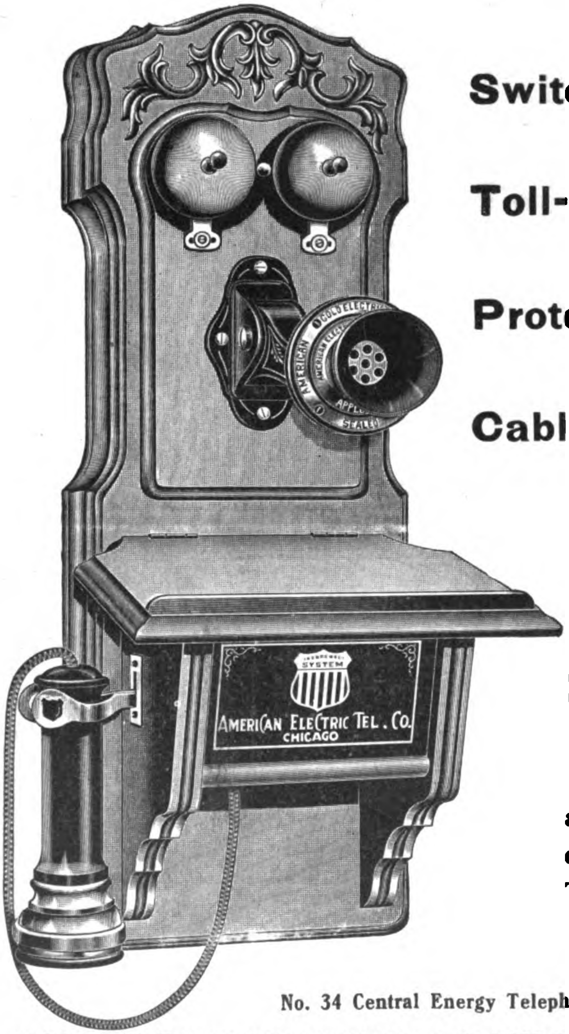

No. 34 Central Energy Telephone.

WITH OUR ENLARGED FACTORY AND INCREASED FACILITIES WE ARE PREPARED TO EXECUTE CONTRACTS OF ANY MAGNITUDE
PROMPTLY AND ECONOMICALLY.

American Electric Telephone Co.

36-58 W. Jackson Blvd., • • CHICAGO, U. S. A.

Digitized by Google

"American" Storage Cells are the best

SEND FOR DESCRIPTIVE CIRCULAR

THOUSANDS IN SERVICE IN TELEPHONE EXCHANGES

AMERICAN BATTERY CO.

ESTABLISHED 1889

172 South Clinton Street .. Chicago, Ill.

The Columbia will do more work, last longer, and give better satisfaction than ANY other dry cell.

The same is true of the National No. 2 Cell, compared with other wet cells.

With our cells you can better your service, and cheapen cost of maintenance. Write for prices and particulars.

LOCK DRAWER "L"
CLEVELAND, OHIO

National Carbon Co.

Digitized by Google

GLASS INSULATORS,

Cross Arms, Pins, Brackets,
Pole Steps, Cross Arm Braces
and Supplies : : : : :

"NOT IN THE TRUST"

American Electric Telephone Co.

36-58 W. Jackson Boul., - - CHICAGO, U. S. A.

Keystone Electric Telephone Co.

MANUFACTURERS OF HIGH-GRADE

TELEPHONES AND SWITCHBOARDS

TOLL LINE EQUIPMENT

Exchanges Equipped in Every Detail

WRITE FOR PRICES

Office and Factory, 565 Old Ave., PITTSBURG, PA.

Digitized by Google

"It is one of the best publications of its kind that comes to our office, and we wish you much success."

MOORE & SON, Decatur, Tenn.

IF THE BEST IS
GOOD ENOUGH FOR YOU

YOU WILL BE SATISFIED WITH THE

Telephone Magazine

The Oldest Independent Telephone Paper in the World.

Each Number contains some interesting and instructive articles on

Exchange Construction and Operation,
Telephone Apparatus, Switchboards,
Toll Lines, Line Construction,
Protective Devices,
Central Energy and Other Systems,
Telephone Troubles

And a Monthly Digest of

TELEPHONE AND KINDRED PATENTS.

EIGHT CENTS A MONTH PAYS FOR THE BEST TELEPHONE PAPER, OR A DOLLAR BILL WILL BRING THE PAPER REGULARLY FOR A YEAR.

NEWSDEALERS SELL IT. SAMPLE COPY FREE.

Address Telephone Magazine

Medinah Temple, CHICAGO, U. S. A.

Digitized by Google

American Electric Telephone Co.

LARGEST MANUFACTURER OF

HIGH GRADE TELEPHONE APPARATUS

IN THE WORLD

Our No. 36 Exchange Telephone

IS MADE IN SERIES AND BRIDGING TYPES.

No. 36......Bridging Type

It is the most perfect and efficient telephone on the market.

Since the introduction of this design by us, a large number of imitations are being advertised with similar numbers and the same design.

Design and detail patents have been applied for on this type of telephone.

Equipped with new, powerful transmitter with extra powerful generator, special ringer coils wound to 1,600 ohms, making one of the most powerful, efficient and durable telephones ever produced.

INFRINGERS WILL BE PROMPTLY PROSECUTED WHEN PATENTS ISSUE.

SEND FOR SPECIAL CIRCULAR AND PRICES TO

36 to 58 West Jackson Bld., Chicago, U. S. A.

Digitized by Google

DIPLOME DE GRAND PRIX

Awarded to the Telephone Magazine at the Paris Exposition in 1900, it being one of the Nineteen American Journals and Magazines that made a collective exhibit.

Digitized by Google

Willard L. Candee, H. Durant Cheever, } Managers.

1889, Paris Exposition—Medal for Rubber Insulation.
1893, World's Fair—Medal for Rubber Insulation.

Geo. T. Manson, Gen. Supt.
W. H. Hodgins, Secretary.

OKONITE TRADE MARK

THE OKONITE CO., Ltd.,
SOLE MANUFACTURERS OF
OKONITE WIRES, OKONITE TAPE, MANSON TAPE
CANDEE WEATHERPROOF WIRES.
253 Broadway. NEW YORK.

THE
CONLEY FOIL COMPANY
TIN FOIL
FOR ELECTRICAL APPARATUS
521 to 541 West 25th Street, NEW YORK

THE
Royal Trust Company
CHICAGO
Acts as Trustee for Bond Issues
WRITE FOR TERMS

CHAS. C. BULKLEY
PATENT LAWYER
Telephony a Specialty
1460 Monadnock CHICAGO

Invites Correspondence
HENRY A. COIT
Laclede Building, - ST. LOUIS
FINANCES and CONSTRUCTS
TELEPHONE PROPERTIES
Organization Construction

KLEIN'S CLIMBERS
Connectors', Linemen's and Construction Tools
Catalogue free ☞ Send for one
MATHIAS KLEIN & SON
87-89 W. Van Buren St., Chicago, Ills.

Please Note.

Our entire plant was destroyed by fire May 10th. We are glad to say, however, we are
"S. D. B. S. I. T. R."
again, ready for business, and are filling orders as usual, and we solicit your business and assure you same shall have our best attention and be appreciated.

Yours very truly,
Central Manufacturing Co.,
Chattanooga, Tenn., U. S. A.

New York
Insulated Wire Co.
CHICAGO BRANCH
192 South Desplaines Street
CHICAGO, ILL.
Makers of All Kinds of Rubber Covered Wires and Cables.
Main Office: NEW YORK
Branches: BOSTON SAN FRANCISCO CHICAGO

THE
Plume & Atwood Mfg. Co.
199 Lake St., CHICAGO, U. S. A.

BRASS, COPPER AND GERMAN SILVER IN Sheet, Rods, Wire, Brazed and Seamless Tube

Digitized by Google

Telephone Magazine

Copyrighted, 1902, by Carl E. Kammeyer. Entered at the Chicago Postoffice as mail matter of the second class.

Vol. XIX. Chicago, July, 1902. No. 130.

PARTY LINES.

MAX W. ZABEL.

Ever since the successful competition of the Independent Telephone Movement with the former Bell monopoly has been an assured fact, the greatest problem confronting the managements of Independent Exchanges has been the question of rates. As a general rule Independent Companies have found it necessary to considerably underbid the competing Bell interests in order to obtain the required foothold upon which to build for their future extension and expansion. The question naturally arises as to the size of the cut in existing rates that is possible, still to insure a remunerative investment. In discussing this phase of the situation it is necessary to analyze and subdivide the cost of original installation, the current operating expenses and other necessary outlays into their component parts to ascertain, if possible, what portion thereof consumes the greatest amount of the money invested and to retain this at the lowest possible amount compatible with first class construction and reasonable depreciation. It is well known that the bulk of the required capital for the construction of an exchange must be expended for line construction, amounting in some cases to as high as 90 per cent of the total outlay. It will be quite apparent from this that it is poor economy to save in switchboard construction, as this consumes but such a small portion of the total cost, and the installation of a good board, though by no means the cheapest, is good economy, at the same time adding but an immaterial amount to the total expense. A further deduction that may be drawn from this is, that to reduce the cost of line construction by decreasing the total amount required without sacrificing efficient construction is the best possible method of increasing dividends, giving low rates and decreasing the amount of money required to equip the exchange by a material amount.

The most plausible and generally effective means of accomplishing this is by the use of a good selective signal system. The universal practice of the Bell companies has been that in those places where their party lines have been reasonably non-interfering their revenues have been correspondingly large and they have been able to compete successfully with Independent exchanges, although having by no means such a large list of subscribers as their competing Independents. The most formidable objection to the use of the Bell party line has been the fact that their selective bells have proved unreliable at times and have given great trouble and annoyance in requiring constant care to be kept in proper adjustment. This is due in large measure to the springs which are used with the polarized ringers and which must be kept at the proper tension in order to cause a selective operation of the bells, and also to the fact that it is impracticable to include condensers in the ringing circuit. It is of especial importance to have the condensers so included as to prevent a metallic grounding of the line which is most harmful, and particularly in common battery or central energy systems is this the case in order to obviate a large and wasteful flow of battery current. These insufficiencies of the spring-adjusted bells are pretty well known, especially among those who have been in any way connected with the operation of Bell exchanges. Independent people have long recognized the necessity of a first-class four-party selective system, but have been unwilling to experiment further with the Bell system, knowing, as they do, its disadvantages.

Copyright, 1902, by Max W. Zabel.

Digitized by Google

Up to the present time, the Independent companies have in many instances reaped a rich harvest by supplying telephone service only to such subscribers as have been able to pay a flat rate for a single complete metallic circuit. The time has come when it is necessary to cater to such subscribers as cannot afford this, but who are willing to have telephone service almost equally as good. The fact is recognized in all commercial undertakings that a certain class of service or material must be supplied to those who are fortunate enough to be able to pay for the very best, a somewhat less expensive service to those not so bountifully supplied with wealth, and still cheaper service to the very poor classes. This analogy must naturally hold true in the case of telephone service as in everything else. Four-party line service can be given at a rate sufficiently low to enable a host of people to subscribe for telephones who are incapable of paying for a single line, and if we take into account the fact that the exchange derives profits from party-line service far in excess of those obtainable with straight metallic lines, it is readily seen why the modern tendency of Independent people is toward party lines.

Party-line selective signaling telephones have proven very satisfactory to subscribers when the bells operate without interference, and the present great objection to the familiar positive and negative current Bell party-line system is due solely to the interference of the bells, whereby subscribers are disturbed by the false operation of the signal. When these spring-adjusted bells are maintained at proper tension their service, so far as the subscriber is concerned, is very satisfactory.

But to maintain this adjustment has brought considerable trouble to everyone connected with the operating company, and the need of a bell that is not affected by line conditions and thus requires no adjustment has long been felt. To construct a bell of this character it is essential that all relays and spring adjustment be done away with. Delicate springs in subscribers' instruments are always liable to get out of adjustment, and their tension must be so regulated as to compensate for line resistance and capacity. Even when properly adjusted, the capacity of long telephone lines and cables is frequently sufficient to cause a discharge in the opposite direction, so that both bells are actuated and thus disturb the subscriber who is not wanted.

Another important feature in systems of this kind, when used in connection with common battery or central energy systems, is the introduction of condensers in circuit to stop the battery flow. When signals are selected by intermittent currents sent in a positive or negative direction, it may readily be seen that condensers can not be put in circuit to prevent this flow, as these condensers discharge in the opposite direction, thereby causing both bells to ring. The battery current may be materially reduced by introducing a high resistance in circuit with the bells, but this still allows a small quantity of current to flow which makes the action of the relays at central station marginal, and they fail at the most critical time. This small amount of battery current continuously flowing does not at first sight seem objectionable, but a little calculation will soon show that the power lost per annum will be very considerable.

The feeling among some subscribers against party lines has not been due to the idea of having several people on the line, but has been caused chiefly by the false and erroneous operation of the bells, and this objection once overcome by the use of a non-interfering selective signaling system, whereby the only bell on the line that rings is that of the called subscriber, the other subscribers on the same party line remaining undisturbed, he takes kindly to this class of service. To give him this first-class service, it is essential not to impose upon him by giving him a service as given by the Bell companies with the positive and negative current system, using springs to cause the bells to operate selectively.

To give good selective party-line service, telephone men now require a bell which shall be no more complicated and have no more moving parts than the ordinary polarized magneto bell, which shall not be affected by line conditions, and which shall require no attention or adjustment other than that necessary with the present magneto bell. This, of course, eliminates the use of springs, relays, etc., in connection with the instruments.

Digitized by Google

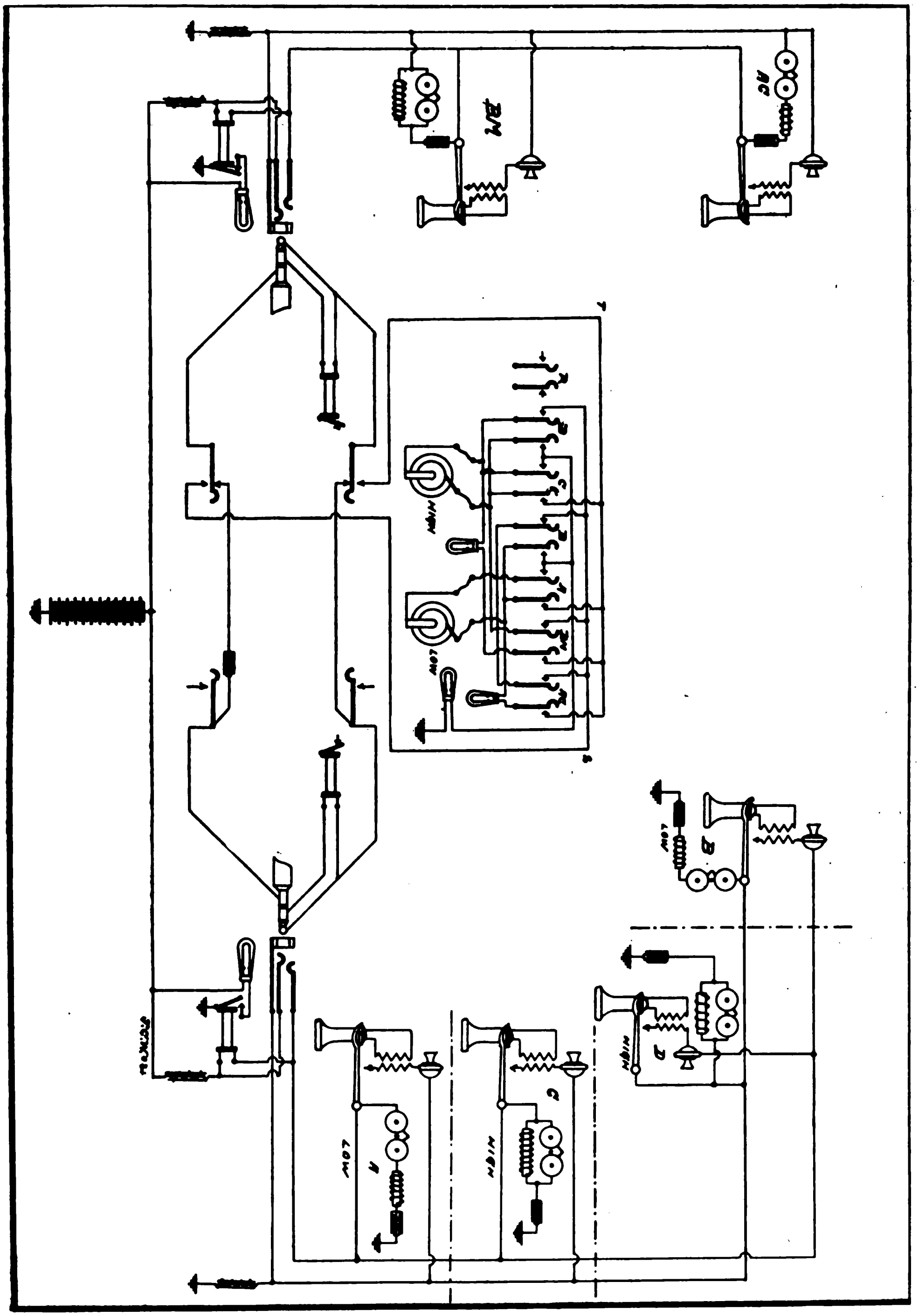

Diagram Showing 2 Party Lines.

An ideal selective signaling system would, therefore, be one that permitted the introduction of condensers in circuit with the bells to stop the battery flow; one that would not be affected by line capacity, inductance or resistance as met with in practice; one that had no spring adjustment or relays to get out of order.

A party-line system that has been recently invented by Mr. Oscar M. Leich, and which is now being placed upon the market by one of the large well-known manufacturers, seems to overcome all of the objections of the present Bell system. The system which is described in detail below meets all of the requirements above specified, viz., it has no springs to be adjusted, no relays to demand attention, requires no adjustment for varying line conditions, and permits of the inclusion of condensers in the bell, or ringing circuit.

The system is shown in detail in the accompanying drawing in which two line circuits are shown, one of the line circuits having two party metallic selective telephones connected thereto and the other line circuit having four telephones, two bridged from either limb to ground. The line circuits end in suitable jacks, and cord connecting appliances are shown provided with the necessary key apparatus to throw selective currents upon the lines to selectively actuate the bells. The system consists of two bell circuits, one circuit being so arranged as to permit of the operation of its polarized bells on currents of a low frequency impressed upon the line. The other bell circuit is so arranged as to permit of the operation of its polarized bell when currents of a high frequency are impressed upon the line. The system is not a step by step system and is adapted only for use with high and low frequency currents, and not with a plurality of different frequencies of more than two.

In order to eliminate entirely any faulty operation that there might be in the actuation of the bells the two frequencies that are chosen are preferably far apart, the low frequency being generated by a two pole generator running at 1,200 revolutions per minute, while the high frequency is generated by a two pole generator running at 3,600 revolutions per minute, or, if required, a six pole generator running at 1,200 revolutions per minute. Thus the two generators may be coupled to the same shaft, one having two poles and the other six poles, the high frequency being three times as rapid as the low frequency. The ordinary generator which is at present employed at 1,000 or 1,200 revolutions per minute may serve as a low frequency generator in the operation of this system to which may be coupled a generator running three times as fast or if alternating current power circuit of sixty cycles is available this may be employed for operating the high frequency bells. The instruments are marked "A" for the low frequency and "B" for the high frequency, one set is thus employed for the two-party metallic circuits and two sets are employed for the four-party line circuits, from either limb or ground. The "A" or low frequency consists of an ordinary polarized ringer as now universally employed in telephone work and is connected in series with an impedance coil and condenser. The impedance of the impedance coil and condenser are so chosen in proportion to the resistance to which the ringer is wound that the high frequency is only in a slight measure retarded by the condenser, while the impedance coil offers such a large impedance that the flow of the high frequency current through the bell circuits is effectually choked or prevented. As the impedance of a condenser varies inversely as the square of the frequency, and the impedance of the impedance coil varies directly as the square of the frequency, a low frequency impressed upon the line will be offered but slight impedance, as the condenser and impedance coil are so chosen as to neutralize each other on said frequency, their effects being in opposite directions as is well known.

The "B" or high frequency bell circuit comprises a polarized ringer the same as used for the low frequency bell and this ringer is associated in parallel with an impedance coil, a condenser being included in series with the parallel circuit. When a high frequency current is impressed upon the circuit containing the high and low frequency bells it will leave the low frequency bell unaffected, as previously stated, but will actuate the high frequency bell, as the impedance coil which is in parallel with the bell will obstruct the pas-

Digitized by Google

sage of the high frequency current and cause it to flow through the windings of the bell—thus operating the bell. The condenser which is included in circuit with the high frequency bell circuit is of considerably lower capacity than that used in connection with the low frequency bell and will permit very little low frequency current to flow therethrough. What little current does flow through the high frequency bell circuit passes through the winding of the impedance coil, thus leaving the bell unaffected. The simplicity of these ringing circuits adapts them admirably for telephone use. There is no danger that the bells are at all marginal in their operation, as the frequencies are taken sufficiently far apart to prevent any such faulty operation of the bells.

From the diagram it will be readily apparent that no wasteful flow of battery current through the bell circuits takes place, as condensers are included in series therein. The fact that the bells are operated by means of alternating current permits of this inclusion of the condensers, which inclusion is impracticable in connection with the well known and unreliable positive and negative current systems. The fact that the bells are so constructed as to operate without any adjustment to compensate for varying conditions of service makes them far superior to the Bell system, employing springs upon which the selective operation of the bells is dependent.

In the drawing a selective key is shown, the circuit of which will be readily intelligible, being of the kind usually provided in all the larger exchanges. A variation in speed of the generator of 25 per cent either way does not injuriously influence the operation of the bells, thus precluding the possibility of any interference between them. The only additional apparatus required in the instrument to adapt it for use with this system is an impedance coil (not a relay), and this can give no trouble and require no adjustment, as it has no moving parts.

The adoption of a system such as outlined above will permit the telephone company to derive more than double the revenue upon the investment, as such a large reduction in the amount of line construction so materially decreases the capital necessary, while it at the same time assures to the company an enlarged yearly income for rentals. A general feeling has been prevalent among telephone men that the aggregate revenues derived from a party line do not exceed those derived from a single metallic line, so that their installation is not justified from a financial standpoint. This idea is erroneous, as will be apparent from the following rates, as given by large companies:

	1 Party.	2 Party.	3 Party.
Baltimore Independent..	48	42	32
Louisville Bell..........	96	78	48
St. Paul Bell...........	84	72	54
Pittsburg Bell..........	125	100	80
Omaha Bell............	..	..	.. ..
Milwaukee Bell.........	96	72	60
Kansas City Bell.......	97	75	51
	RESIDENCE.		
Baltimore Independent..	36	30	24
Louisville Bell..........	60	48	30
St. Paul Bell..........	60	48	36
Pittsburg Bell.........	100	80	60
Omaha Bell............	66	48	36
Milwaukee Bell........	60	48	36
Kansas City Bell.......	72	60	42

With the great cost of line construction, which is the largest cost of installation of the plant, the actual cash earned by using four-party lines is more than double that with single metallic lines. This is adequate proof that party lines, where judiciously used, double your yearly earnings and dividends.

Mitchellville, Ia.—Mitchellville Telephone Company of Mitchellville; capital, $10,000; by B. R. Patterson and others.

* * *

Lorain, O.—The Black River Telephone Company of Lorain, L. A. Fauver, secretary, increased its capital stock from $50,000 to $100,000.

* * *

Milwaukee, Wis.—Articles of incorporation for the Milwaukee Independent Telephone Company, capital $50,000, have been filed with the secretary of state. The incorporators are Edwin Reynolds, E. A. Wadhams and General F. C. Winkler. The company will apply for a franchise from the common council in a short time.

* * *

Augusta, Me.—The Stone Telegraph and Telephone Co., with a capitalization of $10,000,000, one of the largest organized under the new general corporation law of Maine, has filed a certificate at the office of the secretary of state. The company was organized at Portland to

Digitized by Google

acquire, hold, and use inventions and patents relating to the transmission of words or intelligence by telegraph and telephone instruments, machines and appliances.

The promoters are A. P. Browne and Brainerd Judkins of Boston, and John Stone of Cambridge.

A FAIR RATE FOR TELEPHONE SERVICE.

The city of Fort Worth, Texas, has granted a franchise to a company for the establishment of a telephone system. The franchise contains the following provisions: All poles, wires, conduits, etc., must conform to the ordinances of the city; all work upon the system must be of the most improved pattern, and only the best material must be used; the system must be kept supplied with the most approved and up-to-date equipment and all material and work must be approved by the city electrician. All conduits, poles, etc., shall be controlled by the city, which shall have the right to require a change at any time it sees fit. Within the fire limits no poles shall be erected except those necessary for distributing wires from underground conduits. The city of Fort Worth shall at any time have the right to require the removal of all wires or poles from any street and the placing of the wires in underground conduits.

The service rendered by the company must be of the highest grade, and the city electrician shall inspect such work from time to time and report his recommendations to the Council which shall have the power to compel the company to make such improvements as are reasonably required to bring the service to a high grade.

The franchise shall run for a period of twenty-five years. During this period so long as the bona fide subscribers do not exceed 1,000, the charges for a single line residence service shall not be more than $1.75 per 'phone per month, and for business service shall not exceed $2.75 per 'phone per month. When the number of subscribers shall be greater than one thousand and less than two thousand, residence service shall not exceed $2.00 per month, and business service not more than $3.00 per month. When the number of subscribers exceeds 2,000, the charge for residence service shall not exceed $2.25 per month, and the charge for business service, not more than $3.25 per month.

In return for the privileges granted the company, said company for each of the first ten years of the franchise shall pay 2 per cent of the total annual receipts and earnings, from bona fide subscriptions. For each of the succeeding five years, 3 per cent of the total annual receipts and earnings shall be paid into the city treasury. For every year after this time, 3½ per cent of the total receipts must be paid the city.—*Municipal Journal, New York.*

RECEIVER FOR WIRELESS TELEGRAPHY.

One of the principal difficulties in the way of successful wireless telegraphy has been in connection with the coherer, the problem being to get an instrument which would enable wireless messages to be read at long distances. Mr. Marconi claims to have now overcome this difficulty, and another inventor, Mr. T. Tomasina of Geneva, has come into the field with a device, which he calls the "coherer telephone," having the same object in view. The arrangement consists of a coherer in connection with the diaphragm of a telephone receiver, the terminals of the coherer being connected respectively to the antennæ and to ground. The terminals also serve to connect a relay circuit. When the circuit is closed through the coherer by the Hertzian waves passing through the same from the antennæ to ground, the second circuit is closed in turn by the relay to operate the recording apparatus and energize the diaphragm magnet, thus producing a sound, and at the same time decohering the material of the coherer. It is claimed that the sound produced by the receiving instrument is of sufficient loudness to be heard distinctly without placing the instrument to the ear, and hence in use it is not necessary to remove the instrument from its support.—*London Electrical Engineer.*

Kittery, N. Y.—People's Telephone & Telegraph Company, Kittery; for erecting, maintaining and equipping plants for the making and sale of electricity; capital, $500,000; president, Hammond Braman; treasurer, F. E. Baldwin, both of Boston, Mass.

Digitized by Google

INDEPENDENT TELEPHONE ASSOCIATION OF THE UNITED STATES.

SIXTH ANNUAL CONVENTION, PHILADELPHIA, JUNE 24, 25, 26.

The sixth annual convention of this large and prosperous association was held at Philadelphia June 24, 25 and 26, last, the Hotel Walton having been selected as headquarters. By Tuesday morning, June 24th, nearly 250 delegates and visitors had arrived, showing the attendance to be much larger than had been predicted by those who did not believe in the advisability of holding the convention so far east.

TUESDAY.

The opening of the convention took place Tuesday morning at 10:30 o'clock, with President James M. Thomas in the chair. The meeting being called to order, the president called upon Mr. Porter, president of the Keystone Telephone Company of Philadelphia, who presented the Hon. Samuel H. Ashbridge, mayor of Philadelphia, who delivered the following address:

ADDRESS OF HON. SAMUEL H. ASHBRIDGE,

MAYOR OF PHILADELPHIA.

Mr. Chairman and Gentlemen:

I do not presume that Mr. Foerderer had any ulterior motive in making an unkind reference to something which I did, some two years ago, and which has practically brought down upon my head, from that day to the present time, a very great deal of not only criticism, but of abuse, in introducing to Philadelphia an Independent Telephone Corporation, destined to give better service, and more efficient service, at better rates, than had ever existed.

It has, however, had one result: Better service is obtainable, now, from the other company, and very much cheaper rates are given subscribers than ever would have been made if there had not been a competitive company.

I am a great believer in competition in all things, and in that belief I signed the so-called "Keystone Telephone Bill," for which, in the parlance of the railroad man, I have had the "red board" against me ever since. But it matters but little, if one feels that he is doing his duty and is benefiting the community, in giving better service, at cheaper rates; and anything that will materially benefit a community or a people or a business I count it the duty of those in authority to carry out and execute.

I therefore have no apologies to express for signing a bill giving to the people of this city a franchise through a company that has become such a factor in the commercial life of the city.

Telephones are no longer experimental, but are practically useful things that enter into the daily life of all people, in all conditions of life—the physician and the lawyer, the merchant and the manufacturer; and into the home life—our domestic world—it enters so largely that we welcome all competition that has a tendency to extend its usefulness.

I am quite sure that I am glad, to-day, to be here to welcome you—men of the Independent telephone business—who have had the moral courage and the intellectual development to chance your money in investments in a business in competition with a great monopoly.

I trust your assembly and convention, to-day and in the days that follow, may be fruitful and beneficial, in the still further development of the Independent lines of telephone growth, and that you may prove a protection and benefit to every community in which your companies are organized and work.

We are glad, at all times, in Philadelphia, to meet people from other states and other localities, and to exchange and interchange with them the best that is for the commercial interest and the development of our country. This city is noted for its hospitality, its liberality, its cordial greetings to all people, its humanitarianism, the morality of the community, the intelligence of its people, and all things that enter into and have made this country great and honored as it is. We claim, with a very great deal of pride, that the high intelligence of our people and the development of the genius of our people, through the splendid educational institu-

Digitized by Google

tions, have helped to make this country honored and distinguished all over the world.

We are glad, indeed—let me repeat—to have you here in our midst, that you may commune and exchange thoughts and ideas with those connected with our organizations in this city—whether it be in telephone or other directions—and so increase the commercial benefit and the manufacturing genius of our nation. The age is one of progress—onward, constant, upward—and we welcome all people, even those who come in active competition with us—who are interested in the great things that benefit us and themselves as well.

You are to be commended—let me repeat—for your moral courage in entering into competition with what was one of the great monopolies and held this country by the throat, so that no one else dared to enter into the territory forbidden by its edicts. "In union there is strength," and by your combination and organization you have been able to successfully combat those people who tried to crush you out of existence.

I am not antagonistic to the Bell Company; on the other hand, I have warm personal relations with many of the officers of the company, whom I esteem very highly, as men. But this country is too great, and the interests of its people are too great, for one man, or one interest, or one concern, to monopolize all the good things.

I hope your sessions may be fruitful and beneficial, and that when you return to your homes it may be with pleasant thoughts and recollections of the hospitality of the city of Philadelphia. A great many conventions come here, and many bring ladies. I wish to say—without speaking disparagingly of the cities from which you have come—that so perfect are our police regulations in this city that the ladies—our mothers, wives and sisters and daughters—can traverse every portion of the city without any fear of molestation.

We have many things here to show you, and I have no doubt the local committee in this city will show to you many points of interest — our historical buildings (from whence this country sprang), our park, our suburbs, and many points that will be a pleasure to you. If you are not able to see them all, I hope that you may be able to do so at some future time, when you visit the city for other purposes than that of holding a telephone convention and stimulate the gentlemen who are interested in the local company, which has the best telephone plant and the best underground conduit system on the American continent. The hazardous risk of business has been taken by these gentlemen, and, from the manner in which they are conducting their service, it will probably be many years before they will see much profit.

You may read in our newspapers, while you are here, how trees have been uprooted, streets torn up, and all that sort of thing. Well, only treat it as it deserves to be treated—that it is written for a purpose. I presume that the words I say may be taken down, and you need not be surprised if scare headlines greet you tomorrow morning in some of the journals of this great city. I believe in American liberty, in freedom of thought and freedom of speech—yielding not, to any man, the keeping of my conscience.

Again I welcome you, gentlemen, cordially and heartily, to the "City of Brotherly Love"—beneficial, patriotic, loyal and devoted to country and to Union—always ready to give a helping hand to every honest business man, mechanic and men of whatsoever vocation in life.

After the applause following the mayor's address had subsided, the Hon. S. P. Sheerin, secretary of the association, made the following response:

RESPONSE TO MAYOR'S ADDRESS.

HON. S. P. SHEERIN, INDIANAPOLIS.

Mr. Mayor: On behalf of the Independent Telephone Association of the United States I thank you for your most cordial welcome to this "City of Brotherly Love."

Our organization, and the interests for which we stand, are represented in every state in the Union. Our people are about up to the average of American citizenship, in morality and intelligence.

We are very much above the average, in our fighting qualities. This, Mr. Mayor, is not because we were naturally better fighters than other people, but be-

Digitized by Google

cause—like the fathers who signed the Declaration of Independence, in this good city, more than a century and a quarter ago—our opportunities for fighting have been excellent.

We are, one and all, anti-monopolists. This is not only a principle with us, but a business and pursuit, as well. We, however, ask nothing that we are not willing to give.

We come nearer to the hearts and homes of the people than any other public utility. The good housewife who only patronizes a railroad or a steamboat once in a year wants to talk several times a day. We are facilitators of conversation, aiders in the dispatch of business, and great helps to the protection of life and property.

When we were invited to come to Philadelphia, we agreed, as one man, to come. We believe, Mr. Mayor, that every one should come, at least once in a lifetime, to the "cradle of liberty" for inspiration.

We will try to deport ourselves as becometh good citizens while we stay. Our president, of course, will instruct the delegates that the freedom of the city, which you have so generously offered, does not mean freedom to walk off with the "Liberty Bell," or any other "belle," without the consent of the proper parties.

We know that we shall find many things here to interest us. We feel entirely satisfied that we shall carry away with us many pleasant memories of Philadelphia and her people. Our sincere hope is that we may be able to leave behind us pleasant memories of ourselves.

At the conclusion of Mr. Sheerin's well-chosen remarks, that were also heartily applauded, President James M. Thomas delivered the annual address, which ended the morning session.

The afternoon of Tuesday was devoted entirely to the entertainment of the delegates and their friends, a tally-ho ride having been arranged for by the local committee. After a pleasant drive through Fairmont and Wissahickon parks the party arrived at the Indian Rock Inn, where a stop was made for refreshments. The return trip was made along the Wissahickon, the party arriving at the Hotel Walton in the evening.

ANNUAL ADDRESS.

Of Hon. James M. Thomas, President.

Gentlemen of the Convention:

In the Annual Report of the President of the American Telephone & Telegraph Company, under date of December 31st, 1901, page 8, we find the following:

"Competition from telephone companies not associated with this company has existed for several years and is likely to continue in some places for some time to come. While it has in some places affected the licensees of this company disadvantageously, by reducing, for a time at least, the number of their subscribers and forcing them to meet competitve rates that are not based upon a proper recognition of the cost of doing business or an adequate appreciation of the amount that should be set aside from earnings for maintenance, reconstruction and depreciation, the consequences of the competition to the business as a whole have not been of serious moment. The public in each community will determine for itself whether it is for its advantage that there should be two telephone exchanges serving one body of people. It would seem as if but one conclusion on this point was possible."

We believe a little closer examination of the subject would have caused the report to say that these low rates are made in the hope of destroying competition. In almost every instance, instead of meeting competitive rates, they have offered ruinous rates, and so far have failed to destroy competition. So that the public so far has not determined whether there shall be two exchanges, except in some instances where the patronage has been withdrawn from the Bell exchange and the same has been closed. The public desires that competition exist in all lines of business, but we do not believe in ruinous competitive rates. And we do not believe as a general rule Independent rates, as they have been established by the majority of companies, are too low. On the other hand, they show good business profit.

We agree with Mr. Fish's statements that "Competition has existed for several years and is likely to continue in some places for some time to come and has affected the Licensee companies disadvantageously." We also agree with his statement that the consequences of competition to the business as a whole have not been of serious moment. On the other hand, we believe, most sincerely, that competition has done more for the telephone business than was accomplished the entire period before competition entered the field,

Digitized by Google

and cite you, as a proof of that fact, the last annual report of the president of the American Telephone & Telegraph Company. The growth of the business since that time has been marvelous, while the character of service has been greatly improved.

Our object in this address shall be to frankly, fairly and broadly present the telephone business as it exists to-day, to insist upon rights, to discover wrongs, and, if possible, to be of some service to the many interests throughout the country; to point out a way of eliminating dangers to capital, which come through mistaken promotion and ruinous rates. We know that capital is needed to carry on this great enterprise which has been given such great impetus through competition. We desire to assure capital that, with proper precautions, there is no safer investment. We shall therefore begin with rules governing real estate investments and try to apply them to this business as a guide to safe, permanent investment.

The architect who plans well knows every detail of the structure necessary for permanency and harmony before handing the drawings and specifications to the builder. It is quite necessary that the builder fully comprehend the plans and know every detail of the structure as conceived by the architect, and apply to this his own knowledge of how to build well without waste. These two men are essential to the interests of the capitalist who seeks a permanent investment.

But before the architect is selected, it is very essential that the land be purchased at a fair, reasonable price; therefore good judgment must be used in the selection of the agent to make the purchase. Then, too, the capitalist must have money enough to fully complete his new property, without subjecting himself to usurious charges. With all these essentials properly combined, the new enterprise is a good business venture from every standpoint.

It pays the capitalist, because it is a good investment; the agent, architect and builder, because it not only pays well for present labor, but because thev have proven competent and faithful, provides new employment in the future. This view of making good permanent investment in real estate, however, applies only to the older communities. It does not suit, in all its details, the pioneer, for he, in his new country, desires only to take care of his present wants, until he can determine the kind of structure most valuable as a permanent investment.

The building of telephone properties has not been known to man very many years. It is fast passing out of the pioneer stage, though no telephone property has ever yet been completed. But now men who are giving close study to this great and important business believe that the time has come when we should look to the essentials from the investment standpoint.

This business requires more capital than is to-day at the command of the people who are at work in the building up of telephone properties, a stage that is always reached in the building up of great enterprises.

Like all who work in a common business, we should, in view of this fact, give earnest consideration to the best means of relieving the situation. We have, in our meeting to-day, enough men to invest, during the present year, more than was invested the first ten years of the use of the telephone. Local telephone investments are at present limited to the influence of the crowd which undertakes the enterprise, retarded by all other influences that are seeking money for investment in other enterprises, plus the influence of the Bell Company working through many of the financial institutions of the country.

The general money markets have not yet been opened up to the business. Large enterprises have been compelled to pay heavy tribute to the underwriter. There are some instances where the underwriters' profits have very greatly embarrassed the enterprise, and others where this is sure to come in time.

If we have reached the period of building permanent investments (which we believe we have), then we must consider the best ways and means of building so as to be attractive to capital.

Surely, no one who has studied the subject will deny that the prospect for the use of the telephone in the future is greater than it has been in the past; that the demand for its use exceeds the ability of the companies to supply it.

The thing itself is necessary to the pres-

Digitized by Google

ent methods of social and business economy.

It takes uttered sounds—God's method of conveying intelligence—and sends it over long distances, so that it is no longer essential that parties who desire to talk shall be compelled to pick up their cumbersome bodies and carry them, at great expense. When men no longer talk, then the telephone will be placed in museums with the mummy and other dead things; and capital should remember that woman will use it, even after man has quit talking. You know, she always has the last word.

If the thing itself is of a permanent nature, like good building ground, by employing the proper agent, architect, builder and operator, the telephone investor will have a desirable, permanent investment, such as is not only sought in local but general money markets. The capitalist is always ready to invest in something sure and permanent, even though the returns are not very large.

This being true, then, somewhere in this field of investment there is something wrong, or else we could reach the money centers as well as local financial resources.

Suppose we walk along together and make a very close examination, to see if we can discover the reason or reasons, as the case may be, why sufficient capital has not invested in a business with every promise of permanency; especially since it has become a necessity, with an unlimited demand. If permanent necessities, so in demand that the people cannot be supplied promptly, do not return to capital its just reward, then there is something wrong with the management of the business. As we are going upon a search of this kind, suppose the beginning, which in this case is with the inventor.

Of course, we cannot look into every detail, or consider disputed rights among inventors. We start here simply after looking at an invention which is not surpassed, in point of profound discovery and great use, since the beginning of the age of man. If we had comprehended its great value at the time of its discovery, as we now do, capital would have undertaken to place it in the hands of the people in a way that would have spread its use more rapidly and more economically than was done in its earlier stages of development. But as all men are made of mud and slow of comprehension, we must —as with everything else—take its slow stages of development as disclosing its weak and strong points.

It was a mere toy and plaything at first—something that was novel and entertaining. The original investors did not risk very much. They used the usual methods of convincing the inventor that there was very little value to the thing, and he, in order to make some money, must sell cheap; they would take all the risk of perfecting and placing the thing in public use, because they loved him so. That was in the days when men were selfish, before the millennium had dawned.

Some very selfish contracts were made, which aimed to be perpetual and exclusive. Through all the different stages of the growth of the American Bell organization and the preceding organizations, we find the work of the skilful hand of monopoly. These contracts demanded unreasonable tribute to the small capital which represented the parent company. It was the working out of a scheme which demanded for a small number of people with a small amount of capital unreasonable tribute from a large number of people representing a large amount of capital.

In other words, the very small amount of capital employed in purchasing the invention and bringing it to perfection was to always receive reward from the people themselves, through these contracts, after the right, under our patent laws, had expired—by always compelling the hundreds of millions of dollars invested in the manufacture of telephones and switchboards and the building of exchanges and systems throughout the land, to pay a royalty or rental. This is clearly against the principles of our moral and civil laws and cannot be justified, and must fail in its purpose. We find here, perhaps, the greatest cause for the failure of capital to invest in this field so rapidly as it should.

Broad-minded men are at work on the solution of this problem and everything necessary to give to the people telephone service at a fair price and give adequate reward to capital and labor will soon be

Digitized by Google

solved. The price through competition having in most instances been reduced to the minimum, something must be done to preserve the capital already invested and induce new capital to come into the enterprise.

People should never uphold ruinous competition in anything, any more than they should uphold ruinous monopoly. We must always be fair and just to both sides of a controversy. The user of the telephone must not be allowed to enjoy its great privileges at the expense of the man who has invested his money. We only want such competition as will cause the capitalist to be fair; and not a competition that will give advantage to the user.

But as we walk together for the purpose of discovery, let us be able to distinguish so that we may be able at the proper time to eliminate. The capitalist knows that in all instances the real capital invested is not represented by the amount of capital stock issued, and not always by the showing on the property ledger. He also knows that a prospectus has never gained the standard given our good book, the Bible. He understands the ways and wiles of the promoter and knows the rosy hue may be a little water color, which the first dampening effect will destroy. He has learned not to check on the hundreds of thousands that the promoter has, in his mind, made him while talking of his scheme. He knows a business proposition when he hears it, and must always be dealt with fairly, because he has found that is the surest way to do business.

While we stop to differentiate, we must not forget that all so-called capitalists are not capitalists, and that all so-called promoters are not promoters. The one who is not a promoter will do anything for money and the one who is not a capitalist will steal all your time without compensation. Both should be avoided by those who would succeed. The would-be capitalist and the should-not-be promoter should always be placed together.

In this consideration we should always bear in mind that the agent, architect, builder, operator and capitalist are essential to good business investments of great value to a community. Because men pretend to be in either class and sometimes deceive is not a sufficient reason for failure in so great an enterprise as the telephone business. If overcapitalization through promoters' profits and the payment of tribute is a reason for the hesitation of capital to invest, let's seek some way to eliminate it. If competition has made ruinous rates, let's find some way to restore them.

If the people are to be given the benefit of reasonable rates, and the capitalist of a fair return on his investment, the individual, the municipal, county and state organizations must not be selfish and unfair. The present tendency to hold the corporation up does not benefit the people, and is not pleasing to capital, and is a dangerous weed which seem just now to flourish.

The public official should be confined to the reward contracted for when he agreed to accept its trust, and should have no superior right over his neighbor in dealing with corporations' franchises and rights-of-way should be granted on fair and equitable lines and should be considered in accordance with the great benefit the new enterprise will bring the community.

The telephone should always be considered as one of the most beneficial enterprises, and should under proper police restrictions be welcomed to a city, county or state, without burdens which will affect the rights of the user, or the capitalist. The United States in consideration of its general usefulness should do everything necessary to reduce the obstacles in the way of establishing full, complete service at reasonable prices. It should do more, perhaps, than to remove obstacles, but that we will not consider.

We find upon a careful study of this proposition many difficulties. We believe no other business presents quite as many. We find that through the slow stages of development a long period of pioneering that has cost a great deal of money, which practically has had to be replaced by installing more efficient apparatus and construction every few years. So that the capital invested has grown to very large proportions; where much more capital is necessary to be placed in the business in order to take care of the demand for service within the next year or so.

While this on first thought seems discouraging to the promoter, we must re-

Digitized by Google

member that the same is true of every business of a general nature that has had to be developed through invention.

We should bear in mind that through this pioneering we have educated the people to use the telephone, and that they are educated for all time in this method of communication. That while this has been accomplished, we have also been educating agents, architects, builders and operators to handle the business more economically; while the inventors are constantly giving us new facilities for more economically handling the business. There is no excuse now for poor construction, inferior apparatus, ruinous rates, overcapitalization, incompetent employes, or any other thing that would bring danger to the investor. All we now need is to frankly confess our errors in the past, and proceed as business men in all lines proceed, to properly take care of the capital invested in the business, using modern methods and economies in working out the plan. Let us recognize one another's rights, and work in harmony to one common end, to place the business upon a firm financial footing.

The Independent Telephone Association has from its birth taken a stand of recognizing every man's rights. And the work of the officers and committees of the association has always been free from prejudices or preference, and has been conducted upon broad and just principles. The banner of this association has never been trailed in the dust.

We find an unbiased opinion in an editorial in the "Electrical World and Engineer" of June 14th, which we think is appropriate to be read on this occasion:

"Now that the announcement has been made of the independent telephone convention to be held in Philadelphia in the last week of this month, it will be seen to what extent interest continues in that annual affair, for we can hardly believe that the recent local or interstate meeting at Chicago has had any serious effect in deterring from attendance those who would go. At any rate we hope such is not the case. If independent telephony is to be a real force in the country—and a large opportunity exists for it in many ways—its practical exponents must get together. We know of no progressive art in which the practitioners do not from time to time get together and in such an industry as the telephonic it is peculiarly desirable. The independents are scattered, are often without accumulated experience, are not well acquainted with each other, and greatly need the interchange of ideas and sympathies. The recent electric light convention at Cincinnati showed how even after nearly twenty years there remains work for the National Electric Light Association to do; and curiously enough in the early days that body was regarded by the Edison companies very much as the Bell companies now regard the independents—intruders and outsiders not to be associated with. But we think we can imagine a time in the near future when, having justified itself by good work, the Independent Telephone Association can become a powerful influence for the technical advance of telephony, and when Bell telephone men will readily and gladly belong to it, not because it is "independent," but because it is the national organization of operating telephone companies. This may not happen, but if it did, it would not be without precedent. What is necessary, however, above all things, is that not the telephone manufacturers alone, nor the supply men should get together in convention, but that the managers of the local companies should all turn out and benefit by conference."

We feel that on account of the standing that this association has gained as the representative of the Independent telephone companies of the United States, that it must be the advanced thinker and the advanced worker in this field; that its policy should be ever onward to work out difficult telephone propositions on lines that will be both pleasing to capital and to the people. That its object should not be to destroy, but to build up. That it should not be governed by prejudice or preference, but by justice and fair dealing. We hope and believe that this will be its future course.

WEDNESDAY.

Before proceeding with Wednesday morning's session, Professor W. E. Goldsborough, chief of the Department of Electricity, on behalf of the Business Men's League of St. Louis, invited the convention to hold their 1904 meeting in St. Louis during the exposition. Goldsborough also spoke of the many interesting electrical features which would be at the exposition, surpassing in magnitude any electrical exhibit ever held. Referring to the amount of money available, he said that probably between $30,000,000 and $40,000,000 would be secured. The Electricity Building, he stated, will be the largest and most magnificent one of the exposition. It will cover a space of 600 feet square. He also said that while at Buffalo 5,000 h.-p. had been sufficient, St.

Digitized by Google

Louis will need 25,000 h.-p., or possibly 40,000.

In speaking of the telephone exhibits, he suggested the advisability of the exhibitors having all of their apparatus connected and shown in practical operation, so as to give the many visitors an idea of the superiority of Independent apparatus over that of the Bell. After the applause following Professor Goldsborough's remarks had subsided, the Hon. Hugh Dougherty, of Bluffton, offered the following resolution:

"Resolved, That we cordially and heartily indorse the plans of the exposition and give them our hearty support and cordial cooperation."

W. A. Foss, of Cleveland, Ohio, objected to this, saying that at the last convention in Buffalo most of the delegates devoted their time to the exposition, and that the convention would not be well attended. It was explained to him that the resolution did not accept the invitation, but was merely a resolution of thanks. The resolution was carried unanimously.

Owing to the fact that Mr. D. H. Critchfield had been unable to prepare the paper, "The Financial Status of the Independent Telephone Movement," for which he was on the program, and the fact that Mr. Nathl. N. Spofford, on account of illness in his family, could not attend and read his paper, "How They and We Do Things in Massachusetts," Mr. Critchfield moved that only one session of the convention be held that day. This motion was seconded and carried.

Mr. L. A. Goudy, president of the Northwestern Telephone Company, Portland, Me., then read his paper.

THE TELEPHONE SITUATION IN THE NORTHEAST.

By L. A. Goudy, of Northeastern Telephone Co., Portland, Maine.

Mr. President and Gentlemen of the Convention:

I was pleased to learn that the committee on program were apparently students of the Bible. It is an indication that the leaders in the development of the great Independent telephone movement are inspired by a high sense of responsibility to the people, and the cause of an honest public service issue. Acute thinkers and men of sound judgment, they have followed the scriptural rule through their instructions to the program committee, that "The last shall be first and the first shall be last." And I am the victim of their wisdom.

They are also evidently politicians of experience. You all know that it is customary, in political meetings, to introduce the light-weights first, reserving the "big guns" for the closing—a wise rule, as it holds the delegates for the last good things of the "feast of reason and the flow of soul," which the committee on entertainment have seductively arranged to "top off" with the attractions of Atlantic City, for dessert.

With such a prospective and *enspiriting* end-up, gentlemen, you can endure in patience, for a while, the "Dry member from the Prohibition State," as the herald from the Northeast, preceding that valiant and aggressive representative from Massachusetts (the birthplace of telephony), Spofford—of the People's Telephone Company—who can, and undoubtedly will, give even the breezy gentlemen from the great West "points" on the difficulties accompanying installation of the competition, which they know but little about, on the broad prairies of the Western section of the country, with their spirit of patriotism and protection of public rights. He (Spofford) has met the lion in his den and did not fear him. He is the little David of New England, who took up the sling of competition against the old giant of Monopoly, in Massachusetts—"The Modern Goliath," who endeavors to drive all representatives of righteousness from the field.

But to my subject—"The Telephone Situation in the Northeast." New England has a comparatively dense population, particularly in Massachusetts, Rhode Island and Connecticut, and yet, with all of their wealth, and material prosperity, but a very small percentage of their people are subscribers to the telephone. The same rule prevails in Vermont, New Hampshire and the state of Maine. In the latter (my home state) less than one and one-half per cent of the population are subscribers to telephone service, with even a lower percentage in New Hampshire and Vermont. Why? Because the

Digitized by Google

licenses of the Bell Company have demanded such extortionary rates, local and long distance, for (as a rule) exceedingly poor service, confined principally to the cities and thickly populated centers. The farmers and rural communities have been ignored or compelled to pay such extortionate rates for limited and defective service that there has been but little use of the telephone in the country districts. Recently, however, through the aggressive and persistent efforts of the Northeastern Telephone Company, particularly, in conjunction with local enterprise of citizens of village communities, a change has taken place, and a spirit of aggressiveness is manifesting itself, which is putting the monopoly (The New England Telephone & Telegraph Co.) on its metal. The lines quoted, I think, by your distinguished secretary, in a paper at a previous annual convention of this association:

"When the devil was sick, the devil a monk would be;
When the devil was well, the devil a monk was he,"

has applied to the Bell Telephone Company, or its licensees in the Northeast, most aptly. The grip of the monopoly has been an iron one, from its birth, in 1878, to the present time. Opposition has been bought off, as instanced at the beginning, by the elimination of the Western Union Telegraph Company as a competitor worthy of its steel (which might properly be spelled s-t-e-a-l), since which time only spasmodic, feeble and disconnected efforts for the introduction and installation of competition have been made.

The company which I represent was then the Dirigo Telephone Company of Maine, and was the first legally chartered corporation granted broad and liberal rights by the state, to lock horns with the New England (Bell) Company. It was promptly placed, for the time being, "hors de combat," like the Irishman who tackled the bull, but with the usual happy pugnacity of the gentleman from Erin, who maintained, after being thrown over the fence, "Begorra, it's lucky I had me laugh fust." The Dirigo Company of Maine continued in the field and never surrendered or lowered its colors until now, this corporation, under its new name, "Northeastern Telephone Company," is giving the bull of monopoly a red-hot fight. The Northeastern's companion, and ought to have been ally or partner, the Eastern Telephone Company of Rockland, has succumbed and surrendered to the blandishments of its almighty dollar, and is now the tool and associate of the New England (Bell) Company, thereby leaving the Northeastern Telephone Company, the only absolutely independent long distance competitive company in the field, with liberal state charters for both Maine and New Hampshire, and owning trunk lines, connecting between sixty and seventy exchanges and toll stations continuously, through as many towns and cities, with two hundred and sixty odd miles of pole line construction, from the Rangeleys in the north, through the western, central and southwestern section of Maine, terminating at present at Portland, the chief commercial city of New England, outside of Boston; in conjunction with its connections with other small companies, it has options on other lines which will take it into New Hampshire, for which state it has a valuable charter.

The Northeastern Company owns and controls the secret service, automatic system for the Northeast, and has perfected its plans for installation of that system in several cities in Maine and New Hampshire, the people of the latter state being aggressively awake, are pushing for competitive telephone service (through the Northeastern Telephone Company) with a vim typical of the west.

The company has nearly one thousand subscribers to its service, actual and immediately prospective. In fact, the demands are so great that it has been impossible to meet them promptly. Bangor, Skowhegan, Wherville, Augusta, Hallowell, Brunswick and Westbrook are all calling on us to install competitive service at once. In substantially all of these cities and towns our licenses are secured, which, when exercised, will connect with our trunk line service now in operation, as before noted. Capital is our only requirement to enable us to become the strongest opponent of the Bell Company in the East. That necessary adjunct to our other great and valuable rights, privileges and physical properties we expect and hope to secure very soon, now that our plans and propositions have become perfected for large installation and expan-

Digitized by Google

sion of the service. We shall use the secret service, automatic exchange system (Strowger) for the larger exchanges, in conjunction with the manual, party-line service for long-distance connections, and smaller community exchanges, in which we have successfully tested a selective party-line device, which makes every line a private one, thereby centering in the Northeastern Telephone Company, a combination which the Bell cannot beat or overcome, electrically or financially.

All of these important acquisitions for the aggressive development of competitive telephone service in the Northeast have cost, not only a large amount of money, but endless, persistent and unyielding effort, some of the incidents of which may be interesting to you, as illustrating, as our friend Spofford is going to say, "How they and we do things in the Northeast." He will speak for Massachusetts. My experience in Maine has been sufficiently interesting, particularly to myself, to keep me busy since I became, within two years, actively identified in the great fight which independent telephone interests are making for the people.

I will begin by quoting the following section from the laws of Maine of 1895, chap. 102, portion of sec. 3, which reads as follows: "But no corporation organized hereunder shall have authority, without special act of legislature, to construct its lines along the route or routes used, or authorized to be used by any telephone or telegraph company, person or firm, or between points connected or authorized to be connected by the lines of any such company, person or firm, unless it shall first obtain the consent of such company.

This piece of legislation—one of the most damnable ever placed on the statutes in this country, by so-called "representatives of the people," was intended to perpetuate the monopoly in Maine and nullify the Declaration of Independence and the Constitution of our own state, which is similar to that of all other states, based as they are on the Constitution of the United States, as so constructed by our patriotic forefathers, who believed with Lincoln in a "Government of the people, for the people, by the people." Modern statesmanship reverses the principle and institutes unconstitutional legislation for the benefit "of the few, for the few, by the few." This statute was enacted about the time that the independent movement began, following the honest termination of the Bell patents. Such laws are worthy only of those

"Whose honor rooted in dishonor stands;
Who are faithful only to the faithless
few";

or, who have adopted David Harum's theory, "Do others, or they'll do you; and do 'em fust." Such a principle may be excused in horse trades, but representatives of the people, whether in city councils, state legislatures, or congress, ought to be impeached and held up to the indignant scorn of their outraged constituency.

Connecticut, through its legislators, was similarly imposed upon, but not to quite such an open nullification of the rights of man. Evidently the representatives of that state (nearer Tammany Hall, though they be, than the honest representatives from Maine) thought the dose too strong to be tendered to their constituents, and their law as enacted provides substantially that no competition shall prevail unless consented to by the judge of certain courts of the lower strata, evidently applied morally, as well as legally.

In addition to the evidences of sinister and apparently corrupt legislation in the "seats of the mighty," are the records of rotten manipulation of municipal governments, or majorities thereof, as there is always an honest minority that "cannot be bought and will not be sold," or allow their constituents to be imposed upon. The most devilish methods have been used by the agents of the monopoly company, high and low, in position, to defeat and destroy the possibility of competition. Sometimes the weaklings have been satisfied with bacchanalian entertainment, in return for, or preceding, their votes. Others who had political ambition to satisfy were assured of financial and political support, as a consideration for their perfidy. Others still (and I presume that even Philadelphia may have a few such men) demanded more tangible tribute in the shape of substantial money contributions under the cloak of "election expenses," etc. Even high and honored representatives of financial institutions and allied monopoly corporations, many of them, I regret to say, members of the legal fraternity, have been

Digitized by Google

and are recipients of retainers from the great "Octopus," supplemented by franks for long-distance use of the telephone company's lines, and free service from local exchanges, with other similar corrupting and corruptive evidences of dishonesty to the great public, which such men look upon only as a means to an end, to enrich themselves or advance their political ambitions, all of which has become the crying sin and shame of our American government—municipal or otherwise—in their relation to the people's interest.

In order that I may not be accused of scandalization, I will state that I have the proof in my possession to convince the most skeptical that what I have said is true, and I have not told the half, even without which the public records of scandalous legislation is amply convincing of the debauchery by which the great monopoly has intrenched itself (in the East, at least) for the purpose, directly and indirectly, of robbing the public of its substance and rights, whereby its original owners have become multi-millionaires; a condition which should never obtain, to the owners or controllers of public-service companies, which I believe will ultimately be acquired and come under the control of national, state and municipal governments, for the accommodation and direct benefit of the citizens at large.

The financial policy of the licensee company of the American Bell in the Northeast is dictated by the magnates of that enormously watered stock corporation. In the Northeast, the New England Telephone & Telegraph Company, in the days of its poverty and limited power, was reasonable in its charge for service, and accommodating in its relation to the public. An early circular, a copy of which was loaned me for this occasion, is on exhibition, if any desire to examine it, at the secretary's desk. It states that the rate for service was $20.00 for residence use, and $40.00 for business, a standard for annual rentals, on substantially the basis that the independent companies are charging in cities throughout the country, as against, in many cases, fourfold higher rates and in New York City sixfold, or $240.00 for single-line service. In Portland, the company's rates are from $25.00 for the exceedingly exasperating and annoying party-line service up to $75.00 for residence use, and $85.00 for business single-line service, with more or less extras for so-called special conveniences. In other sections of Maine and the Northeast, their rates are made to fit the local conditions, very high where no competition prevails or is probable; very low, down to $12.00, even, in some places, where competition has dared to enter, with exceedingly high rates for three-minute conversations on toll lines. In the city of Portland, where the Northeastern is preparing for installation of competitive service, the New England Company (after installing its so-called up-to-date improved central energy system), advertised free telephones for several months, providing the subscriber would contract for a term of years at their standard rates. This was offered to new subscribers only, or those whose old contracts were subject to cancellation or renewal. Their old subscribers received no favors whatever, consequently they are earnestly awaiting installation of the Northeastern's service.

The great earnings of the New England Company have been made to appear normal, by frequent increases in the capitalization and the watering of its stock, that the public might be fooled, and made to believe that it was earning only 6 per cent. Its attorneys have frequently, in my presence, made the hypocritical, untruthful and deceptive assertions that competition the old company was earning only 6 per cent dividends, a statement so easily overturned and punctured that it reacted with fatal effect. The results of overcapitalization with the royalty charges, compulsorily demanded by the American Bell Company of its licensees, with its excessively high expense and operating account, is becoming like a millstone, suspended to its balloon-like form and condition.

Its first capitalization was $200,000, $50,000 cash, $150,000 patent rights. Six months later the Bell Company was incorporated, with an authorized capital of $450,000, $400,000 of which represented patent right and $50,000 only in cash. Six months thereafter the two companies were combined as the National Bell Telephone Company, which was capitalized at $850,000. $650,000 was for patent rights and only $10,000 cash; balance, $190,000, was represented in apparatus in use. Thus,

Digitized by Google

at the beginning, was instituted that policy of illegitimate, unnatural, intangible and excessive capitalization, on which the public began, and have ever since been compelled to pay arbitrary and extortionary interest. The collapse of the Erie Telephone Company may be a forerunner of what may happen to the American Telephone & Telegraph Company and some of its licensees. In fact, it has already happened to the Central Union, the Michigan and possibly other licensee companies, where aggressive competition has punctured the fraud which the public always has and always will, suffer by when the smash comes. But they can rest assured that the original leaders and owners in the management will be out from under the slump when it occurs.

As applied to the present New England Telephone & Telegraph Company operating in the extreme Northeast—i. e., Maine, New Hampshire, Vermont and Massachusetts—the last annual report, supplemented by the last statement available for examination, March 26, 1902, shows the capitalization to be $20,000,000 gross, represented in stock, of which $18,623,500 was outstanding as dividend earning, plus $4,000,000 in bonds, plus $863,782.08 in debts. Its reserve was reported to be $837,823.48, profit and less including surplus $1,205,648.33; total liability $24,630,753.69, which was offset by its asset account, as per its certificate of condition, as follows: Real estate, $54,612.28; cash and debts receivable, $2,534,971.15; material merchandise and stock, $795,659.23; miscellaneous (whatever that may be), $952,666.67 (quite an item for incidentals not classifiable); last, and most important to the public (rental, subscribers and toll payers, as well as prospective investors), was $20,952,844.55 in patents and franchises, on which a long-suffering, impatiently bled public have been and are paying interest, to which is to be added $10,000,000 more stock, as recently announced, which will carry the entire capitalization of the New England Telephone & Telegraph Company up to about $35,000,000, represented by less than 100,000 telephones in service in the four New England states it operates within. An examination critically of the company's statement reveals a condition which competition ought to be satisfied with. For instance, its earnings for 1901, from exchange service is reported as having been $3,769,844.09; its expense acount, outside of dividends paid, was $4,139,989.79, or over $200,000 in excess of its earnings from exchange service. Included in the items of expense is $254,233.89 rental and royalty charge, arbitrarily demanded for use of instruments from its parent, the American Bell Company. Its dividends, with a small surplus for such a large income, and amount of business done, came entirely from its toll service revenue, and other small incidental items. This condition indicates what will happen when competition gets after this expanded monopoly company, hot and solid, contra to which are competitive telephone companies in the Northeast, with capital sufficient to develop and extend local exchange and long distance service (which the Northeastern Telephone Company is rapidly placing itself in a position to do).

In Massachusetts, as my friend Spofford will undoubtedly show you, they are pushing the development to a profitable and successful position. The automatic companies using the Strowger secret service exchange system in Fall River and Rhode Island are making splendid showings, considering the short time which they have been operating. I believe that the system there installed is by all means the best one (because of its elimination of that expensive luxury, the telephone girl, and its direct automatic secret service features) with which to beat the old inflated monopoly. Systems, however, are subject to the judgment of each company, and the local conditions necessary for it to operate under.

Finally, thanking you for your most kind attention and consideration, I will close, with the hope that the Independent Telephone Association of the United States of America will continue to grow in influence to an extent that will make it a recognized power for good and for the protection of the public and its interests in the expansion of that greatest convenience, educator and economical factor in the affairs of life, business and social—the telephone (whether it be through the automatic secret service, or the manual non-secret, party-line system), so that the citizens of the United States may justly

Digitized by Google

exclaim, in the lines of Burns, to his benefactor and friend:

"The bridegroom may forget the bride
Was made his wedded wife yestre'en;
The monarch may forget the crown
That on his head an hour hath been;
The mother may forget the child
That smiles sae sweetly on her knee;
But I'll remember thee, my friend,
And a' that thou hast done for me."

THURSDAY.

After the discussion of Mr. Goudy's paper, in which Messrs. Webster, Goudy, Judge Sheerin, and Mr. Critchfield took part, the meeting adjourned till 10 o'clock Thursday morning.

The meeting was called to order at 10:30 by Judge Thomas. On opening the meeting Judge Thomas introduced Mr. Thomas Martindale, chairman of the Trades' League of Philadelphia, who addressed the convention briefly on some of his earlier experiences in the telephone field.

Owing to the absence of the Hon. L. J. Hackney of Indianapolis, Ind., his paper, "Where We Were and Where We Are," was read by the Hon. S. P. Sheerin.

"WHERE WE WERE AND WHERE WE ARE."

By Hon. L. J. Hackney.

Read by Hon. S. P. Sheerin.

Mr. Chairman, Ladies and Gentlemen:

When this subject was assigned me, I concluded, of course, that "Where We Were and Where We Are" referred solely to the telephone situation in the state of Indiana. We Indiana people have gotten into the way of thinking that we are pretty nearly the "whole thing."

We think we may modestly claim that Indiana has had a greater development, in the independent telephone business, than any other state in the Union. There are many reasons for this. The people of Indiana are so situated, with reference to each other, that it is not difficult to get them to unite on a business proposition.

We sometimes differ as to policy, and occasionally have some pretty warm differences between ourselves in politics; but we are all for Indiana and the interests of the whole country—as we understand them—and do not hesitate to enter into a contest for what we believe to be right, at any time.

Then, again, we have always been a self-reliant people. Few things have come to us for which we have not labored hard, and we have not achieved many victories, of any sort, without a pretty stubborn fight. We wanted telephone service, because we had found out that it was a good thing. We especially wanted it in the small towns and in the country, and in these places, under the old regime, it was impossible for us to obtain it.

The independent telephone movement had its birth at the expiration of the basic Bell patents. The telephone, as a commercial and social agent, had been in service for more than seventeen years. The service was extremely limited, however, because, in its first years, its projectors looked upon it largely as an experiment, and a great many very sensible people, the country over, regarded it as a toy.

During the last twelve years of the existence of the Bell Company patents, however, there was a very much larger demand for telephones and telephone service than the national Bell organization felt itself willing to meet.

A very large number of licensee companies were organized, for the purpose of doing a telephone business in the several states, but over the whole situation and in every move of the companies hovered the idea that the business was to be exploited solely for the benefit of the exploiters.

I do not mean to say that the first telephone people were, in this, very different from other people who put their money into new enterprises. But certain it is that they insisted upon controlling the field by virtue of their patents, and yet declined to occupy the whole field or even a small part of it, acceptably. A rule of the companies was to get the maximum amount of earning capacity out of the minimum amount of construction and equipment.

Thus, during the entire life of the Bell patents, one of two courses was pursued, in every section of the Union: First, either a direct refusal to extend lines to certain points—with a suggestion that there was no power that could compel the company to go where it did not want to

Digitized by Google

go—or, second, rates were made so high as to be practically prohibitory.

In the large cities of the United States the telephone service under this arrangement was confined to the densely populated business centers. True, there were some few residence telephones, but, as compared with the population and with the development which has since been made, the number was insignificant.

The telephone business was profitable—at least, it was to the parent Bell Company, which furnished the telephones to the subsidiary companies. These telephones were manufactured by an institution controlled by stockholders of the parent company, and the parent company charged the subsidiary companies a good, fat royalty for the use of the instruments.

Many of the fairly large cities of the country either had no telephone service at all, or very small and indifferent plants. The smaller cities and larger towns of the country had never been supplied with telephone service, nor could they obtain it—no matter what inducements they were prepared to offer.

Such a thing as a telephone to a farmer would have been regarded as a huge joke by the parties then controlling the telephone business in the United States.

The oncoming of the independent movement changed all this. It had its origin, not so much in the desire of persons to enter into the telephone business as a business, but from the necessities they felt themselves to be under to have telephones.

The telephone had come to be acknowledged as a great public commercial and domestic necessity. People who had knocked at the doors of the Bell Company for ten long years, imploring an opportunity to pay even exorbitant rates for telephone service, gladly made financial contribution to telephone companies which promised them quick service.

It was no trouble, anywhere in the country—especially in the West—to get up a telephone company, and have all the stock paid up in a night. That is why the independent telephone business has the smallest bonded indebtedness of any business in the country. While not what is legally understood as co-operative, it has been, from the beginning, largely a co-operative enterprise.

It is an enterprise in which all the people co-operated, to get the thing they wanted, without caring very much as to the details of the co-operation. The man who was willing to put two to five hundred dollars into a telephone company for the sake of getting a telephone, simply wanted the best service that he could get, at fair rates, and was not at all particular as to whether he was to be continued in the company or not. If it was thought desirable that he stay in, he was willing to do it. If the purposes of the company could better be carried out by letting some one else have all, or part, of his stock, he gave up cheerfully. The result has been the most stupendous business growth that this or any other country has ever seen.

These conditions, which prevailed the country over, were more pronounced in Indiana than anywhere else. An attempt had been made, in the legislature of 1883, to regulate telephone rates, the maximum monthly rate being fixed at $3.00.

The Bell Company (the Central Union) took offense at this attempt to interfere in any way with its business, and actually tore down and carted away quite a number of telephone exchanges.

This proceeding outraged the people so much that, although a great many years had gone by, they had not ceased to chafe under it. The towns upon which the wrath of the Bell Company had thus been visited and which had been obliged to get along without any kind of telephone service for twelve years, were eager for any opening that would give them an opportunity to supply themselves. They were perfectly willing to fight for what they wanted, provided they could get it at the end of a fight.

The manufacturers of Independent telephone equipment, who, at that time, sprang up the country over, gave our people an excellent opportunity, and in a very little while we had twelve or fifteen towns and cities in the state of Indiana with right good independent exchanges. These exchanges, in turn, enlarged their spheres of usefulness and extended their lines out through the country.

One development brought on another, until there was a great demand for an exchange at our capital city—Indianapolis. The exchange at Indianapolis brought about a demand for long distance toll service between the exchanges

Digitized by Google

throughout the state, and the larger one, at the capital.

It was apparently impossible to get money for these enterprises on the outside. So our people did—as they always have done in an emergency of this sort. They went into their own pockets and paid the bills.

The result has been that we now have in the State of Indiana something over 70,- excellent Independent telephones, everyone of which is giving very much better service than any Bell instrument we ever had gave up to the time that the independent movement was inaugurated.

We have in addition to that number of telephones about 6,000 miles of very excellent toll line and an apparently unaccountable number of miles of country lines, designed purely for intercommunication between farmers.

All this, as I have said, has been brought about by our people themselves. The total indebtedness of our Indiana telephone property does not represent to exceed five per cent of the total cost.

We now have a telephone plant in operation, or under construction, in every important city and town in the state except one—the City of Evansville—and it will not be long until work will be begun there.

Our people have learned a whole lot about the telephone business as they have gone along. One of the great "scarcecrows" that was held before the eyes of our people who thought of making investments in Independent telephone property, was that no Independent telephone company could be successful without long distance connections. By "long distance connections" was meant an opportunity to talk with New York, Boston, Philadelphia and San Francisco.

This looked, to begin with, like a strong argument. But as we have gone along we have gathered some very valuable statistics on this point. One of the things that we now know and which we are able to give you as a certainty, from the experience in our state, is that of all the telephone messages originating in the state only 2½ per cent go out of the state. That is to say, 97½ per cent of the toll messages originating within the boundaries of Indiana are for points within the state. We find, too, that about 85 per cent of all telephone messages originating at or terminating at any given center of population go and come from within a radius of 35 miles.

If we would stop to think about it this is quite a rational condition. The telephone business follows the beaten paths of business generally.

The farmer who talks over the telephone very seldom talks further than to points where he would occasionally have to drive or go by rail. What he wants is good telephone service over the amount of territory he has to cover. As a general proposition the farmer who can drive ten miles on a good gravel road in either direction from his farm is not bothering himself very much as to what the conditions of the road may be in any direction outside of that ten miles.

The thing that people want is the thing they have to use. We are all, in a measure, more or less selfish. We may take some interest in the affairs of our neighbors in the abstract, but the thing that comes home to us is that which ministers to our daily wants.

It will be seen from this that the important thing in Independent telephone development is, first, to have good exchanges in the cities and towns, occupying the whole field and giving telephone service to every one who wants it. Next, we want a good system of toll lines reaching as far as the business of our towns goes. A town may have a thousand subscribers, and in that town there may not be one man who ever wants to talk to New York, and the chances are that there will not be any one wanting to talk to San Francisco.

But while this is true the conversations will be frequent within the business zone of the particular town, and within that territory you want not only the best toll lines that you can get, but you want enough of them.

Keep putting on circuits just as long as the people will patronize them. The opportunity to have quick action on a toll line induces more business. The more business you do the more you will have to do. The best advertisement that any company can have is the hearty commendation of the people who are obliged to use its lines.

I have told you, now, briefly, where

Digitized by Google

we were so far as our state is concerned and where we are. My own conviction is that the Independent telephone interests in Indiana are impregnable. It is not a pleasant task to say unkind things of one's neighbors and competitors. The Bell companies have made very serious mistakes. These mistakes have been our opportunities. We are not only close to the people, but we are of the people.

The telephone of necessity is a domestic institution. It sets by the hearthstone of the family and it sets there all the time. Its derangements and failure to give good service affect every one in the household from the six-year-old school boy, who wants to ask his schoolmate, who had to go home, quickly, because he had eaten too many green apples, how he is getting along, up to the grandfather, who, with life's labor nearly done and whose eyes are reaching out to the great beyond, wants, now and then, to discuss a text with his minister.

We believe in our state that no telephone company can ever succeed without local financial interest and local management. It would be just as easy and just as possible to undertake to run the street and sewer work of an Indiana town from Boston or to have the school trustees and teachers appointed at New York as it would be to successfully run a local telephone plant from either of those places.

The telephone is unlike every other public utility. It enters into relations with the people in a way that is not paralleled by any other industry.

We have, as I have said to you, in the State of Indiana over 70,000 Independent telephones. If we had all over the state at this time the same development that we have in the county where we have the largest development we would have 208,000 'phones, and if we had all over the state the same development that we have in the little town of 2,000 people where we have the greatest development we would now have 412,000 'phones. We feel quite certain that we will have that many telephones within the next five years.

Our rates are reasonable and they yield a decent profit. We have not paid, in any instance, exorbitant promotion rates nor have we filled our stock lists with water.

Our people have come to understand that the telephone business offers a fair and sure return for their money. They believe that it has come to stay and will always have its highest development in the hands of local people.

I have undertaken to tell you where we were and to give you some idea of where we are and I predict that in five years we will have within the limits of the State of Indiana 500,000 telephones.

After the reading of Mr. Hackney's paper, it was announced that owing to the absence of F. B. Campbell, of the Lone Star Telephone Company, San Antonio, Texas, "The Independent Telephone Situation in the Southwest," would not be read, but that Mrs. Anney McElroy Brett, of El Paso, Texas, the only woman promoter, would address the meeting on her experience in the Independent telephone field. Mrs. Brett said:

ADDRESS OF MRS. ANNEY M'ELROY BRETT,

El Paso, Texas, June 26.

It is certainly very kind of you gentlemen to grant the indulgence to one lone woman to come here and speak. I feel that almost everything has been said that can be of interest and all I can do will be to give a brief outline of the work in my own territory.

When Judge Thomas spoke of my husband's work having been carried on in Texas, he was not quite correct. It was in Michigan—around Detroit, Grand Rapids and Port Huron.

When I took up the work in western Texas the conditions were very much the same as they were in Michigan in the early days. The people had to educated to know that another company could come into the field and compete with the Bell.

Two years ago, when I started the work in El Paso, the Bell company had 300 'phones in service, and they were charging $3.00 to $5.00 a month. When I commenced work I thought if I reached 600 telephones I would be doing well. To-day we have 1,550 three-year contracts.

Our franchise is rather peculiar. We have a sliding scale. We are permitted

Digitized by Google

to charge $20.00 and $30.00 up to 1,000 'phones. In excess on 1,000 'phones we are permitted to increase the price 50 cents per 'phone. The contracts with the people also permit this.

It was necessary, before obtaining those contracts, to educate the people to the fact that, in the telephone business—unlike most other kinds of business—the larger the plant grows the less money there is, unless one is permitted to increase the prices in proportion.

I believe that it would be possible for all companies to obtain these concessions if the teleohone companies would educate the people to know that this has to be done. They have to be educated to it.

The proposition is exactly the same as that of water, gas and electricity. Up to the present time we are not able to measure our service by meter. It may come to that, and I hope it will; but, in the absence of that, we have to do the best we can, and I figure that fifty cents a year, per 'phone, for 100 new connections, if it is worth anything to a person, it is worth that, and still keep a very nice proposition for the company putting in the plant.

The independent companies, in the pioneer days of the independent work, made the mistake of cutting the prices of the old Bell Company too low, and, not realizing that that would put many more 'phones in use, they found themselves with a proposition on their hands that was very hard to handle, unless the council would be generous enough to change their franchise and allow them to raise their rates; and even then, it would be hard to educate the people so that they would be willing to pay the new rates.

I feel that the independent people should make a point of enlightening the people upon this subject. Every one who has seen our franchise looks upon it as one of the best in the United States—particularly because of that one clause, and it astonishes every one that I could secure the contracts in the same way.

I spoke of the work of the old Detroit independent company, which my husband organized. After his death, the company went into the hands of the Erie; but, in justice to the gentlemen who had control of the company at that time, I will say this: I really think that, if the Detroit company had had a price, for 'phones, at which they could have maintained a good plant, and, at the same time, have made a good profit, that consolidation would never have been made.

The price the old Detroit company had was one that was not asked for. At the time we were seeking the franchise we asked for $36.00 and $56.00; but there was a strong fight made by the local company and the council—hoping to defeat us—put the price down. and, as it was the best we could do, we accepted the franchise.

Starting out with two or three thousand 'phones, it was a very good proposition; but when the company had six or seven thousand 'phones, they found that they had not a paying investment.

I am afraid that some of the other independents, who have cut the price too low, will find themselves in a similar predicament, unless the city council and the people will grant them the privilege of changing the price as the plant increases.

As the town of El Paso is growing rapidly, I feel that, with our franchise and contracts permitting the advance in price, we have a very handsome proposition. We also have exchanges in a number of the small towns around El Paso—one in Alamaguado, New Mexico, 80 miles distant, with 200 'phones; one in Cloudcroft, a distance of 20 miles. In Deming—a distance of 80 miles in another direction—we have 150 'phones; and from there we expect to run to Silver City.

I received a telegram yesterday saying that our company had just been granted a franchise in Chihuahua, Mexico, across the line from El Paso, with the promise from the "powers that be" that it would be gotten up in good form.

Our distances are quite great and we have hardly the proposition that you have here, but the people are very nice, indeed, and they are very willing to pay a good price for long distance service. The gentlemen of the chamber of commerce sent me word that if we were ready to go ahead with our long distance lines they would be glad to give us the preference, as they felt that we, having the local plant at El Paso, held the key to the situation and that the long distance service rightly belonged to us.

Digitized by Google

We would have had the El Paso plant opened several months ago but for the fact that the Bell Company has never ceased in its fight against us. It has been one injunction suit after another. It has now gotten to a point where the Bell Company has just ten subscribers that we have not on our list.

The gentlemen of the Chamber of Commerce told me that they would canvass the town, explain to each and every person the two-phone question (which the Bell Company has constantly harped upon, in trying to defeat the independent companies) and that, as we had practically all of the Bell subscribers—with hundreds that they have not—it would be very easy to explain to the public that two 'phones would not be necessary in El Paso, and that, for their part, they intended to see that such was not the case; that the Bell 'phone would be put out of the town, as they have long enough imposed upon the people with their miserable service.

We have had the united support of the newspapers. The editor of one paper asked me, the day I left home, if I would grant them the privilege of publishing our list of subscribers, that they might show the public that there was no fear of their ever having to keep two 'phones.

I will relate a funny little incident that happened at the time of our franchise fight. The Bell Company kept one of their state men (whom they employ for the purpose of fighting independent companies that are trying to secure franchises) in El Paso for four months. They had, also, one of the prominent young attorneys in the town and they were both at the council meetings every night for a year. I was there, too.

On this occasion a dispute had arisen between the Bell represenative and myself regarding the reduction of prices in El Paso. He had made the statement that they had been reduced voluntarily. I had made the statement that they had never been reduced until I had started to work for a franchise, and that the reduction then was made through fear of competition and with the one idea of trying to crush out competition, that they might go ahead and charge what they pleased; and I further stated that the reduction, up to that time, was only on party lines.

The gentlemen of the council, not being familiar with the telephone business, asked the question, what was meant by "party lines." The Bell representative—a gentleman, by the way, very imposing in both form and manner, weighing over two hundred pounds—in all his talk before the council, had, as it seemed to me, but one idea in view, and that was, to impress them with the fact that he was representing the great Bell Telephone Company—that he was the great "I am"—and when explaining the two-'phone question, he simply tried to impress them with the fact that the grea' Bell Company was the only company; that they had many miles of line, which were fast reaching out toward El Paso.

When he rose to answer the question that had been put to him this night, he never once touched upon the point he started to explain, further than to state that party line service, under certain conditions, was the proper kind of service.

After he had sat down the gentlemen of the council looked at one another in rather a dazed manner, realizing that they had not heard what they had expected to hear and had not been enlightened to any extent upon party lines.

The mayor discovered my little boy—a little fellow about six years old—who seemed to be laughing over the attempt of the Bell representative to explain party lines. Without meaning the slightest insult to the gentleman, the mayor said: "Reggie, I think you can tell the gentlemen what party lines are."

Nothing daunted, the little fellow walked up to the mayor, who lifted him on to his desk. He rather caught his breath, to stop laughing, and remarked: "All I can tell about party lines is just this: When we lived in San Antonio we lived at the house of a young woman who had a telephone that was No. 5 on a party line. A young widow, who lived next door to us, had a telephone that was No. 6 on the same party line. Every time the 'phone rang six times the young lady in our house would run to it to hear what was being said."

The council seemed to feel quite satisfied with the explanation that party lines at least meant public service to all those on the line, if they were willing to listen and learn. The Bell representa-

Digitized by Google

tive felt so hurt and insulted, to have a six-year-old child called upon to explain what he had failed to explain, that he left the meeting and it was his last appearance before the council.

After the enthusiastic applause following Mrs. Brett's address had subsided, Mr. L. W. Stanton, superintendent of the Federal Telephone Company, read his paper on "Needed Improvements in Independent Telephony," which is given elsewhere in this issue.

Upon motion of Secretary Sheerin a vote of thanks was extended to the local committee to the Keystone Telephone Company, to Mayor Ashbridge and to the citizens of Philadelphia for their many courtesies and lavish entertainment extended to their visitors.

Mr. Sheerin asked that an auditing committee be appointed to audit the books and accounts of the treasurer. The request was granted, but no committee was appointed at this time, as the members can better be selected later. He also stated that after a continuous service of four years as secretary and treasurer of the association he had had enough honor, and asked that some one else be elected.

Before adjournment the following important resolution was adopted:

"Whereas, it is generally believed and currently reported through the press of the United States and otherwise that a combination exists among dealers in electrical supplies, the purpose and object of such combination among others being to unlawfully increase prices of such supplies from 25 to 50 per cent; to limit the production of such materials; to unlawfully discriminate in favor of certain purchasers of such supplies and to boycott or cause to be boycotted buyers or dealers who are not affiliated with such association or combine; and

"Whereas, such organization in effect amounts to a conspiracy which unlawfully and injuriously effects general trade in such supplies, and is especially injurious in its effects to purchasers of apparatus for independent telephone properties; now, therefore be it resolved that the president and secretary of this association be and are hereby directed to advise the Attorney General of the United States of the nature and methods of doing business practiced by said organization or combine, and to request the Attorney General of the United States to cause an investigation to be made of the methods of said combination or association and to tender the assistance of this association, if desired, in making said investigation, and if found to be in violation of law to request the Attorney General of the United States to commence action and prosecute the same to a conclusion with a view of preventing and terminating such unlawful business methods.

The convention then adjourned until 2 o'clock in the afternoon for the election of officers.

THURSDAY AFTERNOON.

Promptly at 2 o'clock the convention was called to order, with Mr. H. C. Young in the chair. The following committee was appointed to nominate the officers and advisory board for the coming year: H. D. Critchfield, Cleveland; L. A. Goudy, Portland, Me.; E. E. Webster, Minneapolis; C. L. Ingham, Buffalo; F. W. Schirmeyer, Decatur, Ind.; R. F. Johnson, Saginaw, Mich., and G. B. Rudy, York, Pa.

The committee retired for consultation, and soon presented the following: For president, James M. Thomas, Cleveland; first vice-president, Hugh Dougherty, Bluffton, Ind.; second vice-president, C. E. Stinson, Rochester, N. Y.; third vice-president, W. H. Durin, Cedar Rapids, Iowa; secretary and treasurer, J. B. Ware, Detroit, Mich.; first assistant secretary, C. E. Wilson, Philadelphia; second assistant secretary, E. L. Barber, Wauseon, O.; third assistant secretary, T. B. Lee, Pittsburg, Pa.

On motion of Mr. Critchfield the convention casts its vote unanimously for these officers.

After adjournment at 2:30 o'clock the delegates and visitors made an excursion to Atlantic City, a special train having been provided, leaving Philadelphia at 3 o'clock.

Clovermont, Va.—The Clovermont Telephone Company. To build and operate a telephone line from Clovermont to Surry Courthouse, to Waverley and to Petersburg. Capital, $1,000 to $5,000. George H. Woods, president; H. J. Arrington, secretary-treasurer.

* * *

Delray, W. Va.—North River Telephone Co. of Delray, W. Va., has been incorporated to build 12-mile telephone line along North river from Rio to Hanging Rock; capital $500; incorporators, I. R. Marvey and J. W. McDonald of Delray, I. N. Baker, R. L. Hund, E. T. Byrd and others of Rio, W. Va.

Digitized by Google

CONVENTION NOTES.

Warner Electric Company was ably represented by Mr. T. W. Warner.

* * *

Mr. George T. Manson was on hand to discuss the well-known merits of "Okonite."

* * *

Nungesser Electric Battery Company, of Cleveland, was represented by B. P. Nungesser.

* * *

American Electric Fuse Company, of Chicago, was represented in an able manner by Mr. Frank C. Jones.

* * *

Messrs. W. A. Foss and J. R. McLean did the honors for the American Toll Telephone Company, of Cleveland.

* * *

Messrs. F. B. Patton and P. J. Hertz looked after the interests of the Illinois Electric Specialty Company, of Chicago.

* * *

The Gordon Battery Company exhibited a fine line of specialties at the Walton, and was represented by Mr. W. C. Banks, of Chicago.

* * *

Ericsson Telephone Company's exhibit, which was presided over by Messrs. K. Weman and C. E. Monroe, attracted a great amount of attention.

* * *

The Sumter Telephone Manufacturing Company's exhibit at the Walton attracted a great deal of attention. Mr. F. C. Manning and L. C. Le Bourveau were in charge.

* * *

Holtzer-Cabot Electric Company, of Brookline, Mass., exhibited a complete line of their well-known telephone apparatus. Mr. J. J. Estabrook of their Boston office was in attendance.

* * *

The Lambert-Schmidt Telephone Manufacturing Company, of New York, was well represented by Mr. Lambert Schmidt, assisted by Messrs. W. W. Bostwick, Jr., John Roach, B. O. Bogert and John Alberts.

* * *

Standard Underground Cable Company had headquarters at the Manufacturers' Club. Messrs. T. E. Hughes, R. N. Hirst, G. L. Wiley, P. H. W. Smith, A. B. Saurman and General Manager Marsh were in attendance.

* * *

The Electric Storage Battery Company welcomed its many friends to its headquarters in the parlors of the Walton where an interesting exhibit was made. Messrs. E. L. Reynolds, R. C. Hull and H. B. Coho were the representatives.

* * *

The International Telephone Manufacturing Company was ably represented toward the close of the convention by its president, Henry Shafer, who had just returned from an important business trip through Canada which resulted in some large contracts.

* * *

Messrs. J. J. Nate, A. J. Rousseau, C. W. Stiger, Eugene L. Brown and S. L. Reese, who represented the Stromberg-Carlson Telephone Manufacturing Company, gave a cordial welcome to the large number of delegates who visited the company's exhibit in the Keystone Building.

* * *

The exhibit of the North Electric Company, Cleveland, Ohio, located on the ground floor of the Keystone Building, was pronounced one of the most complete at the convention. Messrs. C. H. North, F. F. Sapp, and R. Hendrickson took good care of the large number of callers.

* * *

The American Electric Telephone Company, of Chicago, had an interesting exhibit in rooms 913 and 915 at the Walton, where the American-Leich Four-Party Line Selective Signaling System was shown in operation. The system attracted much attention from all visitors, as it is the only perfect selective signaling system on the market. The display included two of the Keystone wall telephones, of which 8,000 have been ordered by that company, also a line of the new Keystone and American desk sets, Burns' terminals, American Central Energy transmitters, receivers, listening and ringing keys and detail parts showing the construction of the apparatus. The American Electric Telephone Company was represented by the following gentlemen: P. C. Burns, president, and J. G. Ihmsen, general manager, of Chicago; John H. Reid, eastern agent, Philadelphia, and S. J. Bear, general agent, Topeka, Kan.

Digitized by Google

Persons in Attendance at Sixth Annual Convention Independent Telephone Association, U. S. A., Philadelphia, June 24th, 25th and 26th, 1902.

H. C. Young	Columbia Telephone Co.	Columbia, Pa.
S. P. Sheerin	New Telephone Co.	Indianapolis, Ind.
C. L. Ingham	Frontier Telephone Co.	Buffalo, N. Y.
C. E. Austin	Frontier Telephone Co.	Buffalo, N. Y.
B. G. Hubbell	Consolidated Telephone Co.	Cleveland, Ohio
L. Sands	Williams-Abbott Electric Co.	Cleveland, Ohio
Mrs. L. Sands		Cleveland, Ohio
Geo. R. Fuller	Rochester Telephone Co.	Rochester, N. Y.
Mrs. Geo. R. Fuller		Rochester, N. Y.
C. E. Stinson	Rochester Telephone Co.	Rochester, N. Y.
Mrs. C. E. Stinson		Rochester, N. Y.
T. L. Pryor		New York, N. Y.
W. H. Bryant	Home Telephone Co.	Mobile, Ala.
F. C. Manning	Sumter Telephone Mfg. Co.	Sumter, S. C.
P. P. Nungesser	Nungesser Elec. Battery Co.	Cleveland, Ohio
Mrs. P. P. Nungesser		Cleveland Ohio
C. Seyler	Hubbard & Co.	Pittsburg, Pa.
H. Grant Thompson	New Haven Novelty Mach. Co.	New Haven, Conn.
Frank B. Jones and wife	American Elec. Fuse Co.	Chicago, Ill.
Fred De Land		Pittsburg, Pa.
	Carnegie Tel. Co.	Carnegie, Pa.
	McKeesport Tel. Co.	McKeesport, Pa.
	Latrobe Tel. Ex. Co.	Latrobe, Pa.
	Federal Tel. Co.	Pittsburg, Pa.
	Kansas L. D. Tel. & Tel. Co.	Topeka, Kan.
A. E. Dobbs	Electrical Review	New York, N. Y.
C. M. Hamilton	F. Bissell Co.	Toledo, Ohio
Mrs. C. M. Hamilton		Toledo Ohio
H. H. Robinson	United States Tel. Co.	Cleveland, Ohio
Charles T. Walker	Electrical World & Engineer	Philadelphia
Edwin D. Schade	Johnstown Telephone Co.	Johnstown, Pa.
Wm. A. Hopkins, Jr.	Erner-Hopkins Co.	Columbus, Ohio
F. J. Dommerque	Kellogg Swbd. & Supply Co.	Chicago, Ill.
Joseph C. Belden	Kellogg Swbd. & Supply Co.	Chicago, Ill.
Frank C. Perry	Western Electrician	Chicago, Ill.
John J. Flanagan	Western Electrician	Chicago, Ill.
H. D. Brainard	Western Electric Co.	Philadelphia
F. M. Schirmeyer	Citizens Telephone Co.	Decatur, Ind.
G. B. Rudy	York Telephone Co.	York, Pa.
A. J. Rousseau	Stromberg-Carlson Co.	Chicago, Ill.
E. B. Overshiner	Swedish-American Tel. Co.	Chicago, Ill.
F. B. Patten and wife	Illinois Elec. Specialty Co.	Chicago, Ill.
W. E. Doolittle	Sterling Electric Co.	Lafayette, Ind.
O. C. Snider	Kansas City Home Tel. Co.	Kansas City, Mo.
F. R. White	"Electricity"	New York, N. Y.
R. F. Johnson	Valley Telephone Co.	Saginaw, Mich.
James G. Biddle		Philadelphia
R. B. McPherson	Livingston Home Tel. Co.	Howell, Mich.
Edward L. Reynolds	Electric Storage Bat. Co.	Philadelphia
G. W. Swan	John A. Roeblings Sons Co.	New York, N. Y.
W. L. Doyle	John A. Roeblings Sons Co.	Trenton, N. J.
D. F. Ivins	John A. Roeblings Sons Co.	Trenton, N. J.
U. G. Tingley	John A. Roeblings Sons Co.	Trenton, N. J.
C. B. Cushing	John A. Roeblings Sons Co.	Trenton, N. J.
Cecil P. Poole	American Electrician	New York, N. Y.
Elmer E. Smith	American Telephone Journal	Chicago, Ill.
E. F. Kirkpatrick	McRoy Clay Works	Chicago, Ill.
J. H. Reid	American Elec. Tel. Co.	Philadelphia
J. G. Ihmsen	American Elec. Tel. Co.	Chicago, Ill.
Harry W. Johnson	Columbia Telephone Co.	Columbia, Pa.
Wm. D. Gharky	Consulting Engineer	Philadelphia
Chas. G. Stevens		Chicago, Ill.
L. G. LeBorveau	Sumter Tel. Mfg. Co.	Sumter, S. C.
S. J. Bear	American Electric Tel. Co.	Topeka, Kan.
Edward E. Webster	Twin City Tel. Co.	Minneapolis, Minn.

Digitized by Google

E. B. Fisher	Citizens Tel. Co.	Grand Rapids, Mich.
A. E. Barker	Kellogg Swbd. & Supply Co.	Cleveland, Ohio
Paul W. Bossart	Kellogg Swbd. & Supply Co.	Philadelphia
Harry Huskey	Helios-Upton Co.	Philadelphia
W. S. Eckert	National Conduit & Cable Co.	New York
H. A. Harvey	United Tel., Tel. & Elec. Co.	Chicago, Ill.
Sherman W. Granger	Zanesville Tel. & Tel. Co.	Zanesville, Ohio
R. Hendrickson	North Electric Co.	Cleveland, Ohio
J. R. Wilson	Crocker-Wheeler Co.	Ampere, N. J.
E. F. Edmunds	American Tel. Journal	New York, N. Y.
W. H. McDonough	American Tel. Journal	New York, N. Y.
Hugh Dougherty	United Telephone Co.	Bluffton, Ind.
D. F. LaFean	York Telephone Co.	York, Pa.
John A. Armstrong	Louisville Home Tel. Co.	Louisville, Ky.
	Independent L. D. T. & T. Co.	Louisville, Ky.
Geo. S. DePerow	Federal Telephone Co.	Cleveland, Ohio
N. H. Holland	Mayberry-Holmes Tel. Co.	Boston, Mass.
P. J. Hertz	Illinois Elec. Spec. Co.	Chicago, Ill.
B. S. Barnard	American Vitrified Con. Co.	New York, N. Y.
A. C. Morse	Federal Telephone Co.	Cleveland, Ohio
S. C. Kissner	Citizens and Far. & Mer. Tel. Co.	Coshocton, Ohio
Kempster B. Miller	Kellogg Swbd. & Supply Co.	Chicago, Ill.
H. B. McMeal and wife	"Telephony"	Chicago, Ill.
S. Burnett		Philadelphia
John H. Scofield		New York, N. Y.
J. M. Knox	Varley Duplex Magnet Co.	New York, N. Y.
J. B. Rhodes	Zanesville Tel. & Tel. Co.	Zanesville, Ohio
F. F. Sapp	North Electric Co.	Cleveland, Ohio
Mrs. F. F. Sapp		Cleveland, Ohio
C. W. Stiger	Streator Ind. Tel. Co.	Chicago, Ill.
H. B. Gay	Electric Storage Battery Co.	Baltimore, Md.
R. S. Pullen	Pullen Electric Co.	Philadelphia
Willard S. Sisson	D. & W. Fuse Co.	Providence, R. I.
John Mustard	H. C. Roberts Elec. Supply Co.	
H. C. Roberts	H. C. Roberts Elec. Supply Co.	
George Breed	Drake, Breed & Co.	Philadelphia
A. E. Bainbridge		Philadelphia
T. L. Townsend	Vallee Bros. Electrical Co.	Philadelphia
C. W. Kline	Inter-State Tel. Co.	Hazleton, Pa.
C. A. Mans	Anthracite Telephone Co.	Hazleton, Pa.
Fred May	People's Tel. Co.	Hazleton, Pa.
J. E. Zeluff	Ind. Long Dis. Tel. & Tel. Co.	Louisville, Ky.
W. H. Butler	Kent Home Telephone Co.	Kent, Ohio
A. Atwater Kent	Atwater Kent Mfg. Works	Philadelphia
R. E. Russell	Western Penn. Tel. Co.	Ebensbury, Pa.
W. K. Beard	American Electrician	Philadelphia
S. C. Thayer	Bradford Co. Tel. Co.	Towanda, Pa.
Russell Howland	Electrical Review	New York City
Stanley A. Duvall	Williams-Abbott Elec. Co.	Cleveland, Ohio
W. E. Goldsborough	Telephone School, Purdue University, and Chief Department of Electricity, World's Fair	St. Louis
T. W. Warner	Warner Electric Co.	Muncie, Ind.
J. J. Burleig	Eastern Tel. & Tel. Co.	Camden, N. J.
Chas. D. Meyers	Helios-Upton Co.	Philadelphia
M. L. Godkin	Western Electrician	New York
S. B. Rawson	Rawson Electric Co.	Elyria, Ohio
F. M. Potter, Jr	Syracuse Telephone Co.	Syracuse, N. Y.
W. D. Barnard	United Tel. & Tel. Co.	Philadelphia
J. H. Griswold	American Con. & Trading Co.	Elyria, Ohio
H. B. Coho	Elec. Storage Battery Co.	Philadelphia
Bruce Ford	Elec. Storage Battery Co.	Philadelphia
R. L. Andrews	Farmington Tel. Co.	New Britain, Conn.
Benj. F. Case	Farmington Tel. Co.	New Britain, Conn.
Leon W. Pullen	Leon W. Pullen Elec. Co.	Philadelphia
Arthur B. Kratz	Kellogg Swbd. & Supply Co.	Philadelphia
N. C. Watts	Staunton Mutual Tel. Co.	Staunton, Va.
A. M. Worstall	Inter State Tel. & Tel. Co.	Philadelphia
C. E. Starr	Interstate Tel. & Tel. Co	Philadelphia.
J. J. Estabrook	Holtzer-Cabot Elec. Co.	Boston, Mass.
T. C. Martin	Electrical World & Engineer	New York, N. Y.
J. M. Wakeman	Electrical World & Engineer	New York, N. Y.

Digitized by Google

K. G. Martin		New York
A. Y. Scholl	Consolidated Tel. Co. of Pa.	Mifflintown, Pa.
N. E. Robb	United Tel. & Tel. Co.	Williamsport, Pa.
Harry G. Arnold	Eastern Elec. Con. Co.	Philadelphia
E. M. Yarnall	Eastern Elec. Con. Co.	Philadelphia
S. C. Pratt	Kellogg Swbd. & Supply Co.	New York, N. Y.
D. M. Bliss	Holtzer-Cabot Electric Co.	Brookline, Mass.
Loan J. Marsh	Contracting Engineer	Philadelphia
F. Herboth	Keystone Tel. Co.	Philadelphia
W. B. McCurdy	American Electric Fuse Co.	New York, N. Y.
Christina Peters		Rockford, Ill.
F. A. Demarest	Inter-State Tel. Co.	Trenton, N. J.
W. F. Sanville	A. & J. M. Anderson Mfg. Co.	New York, N. Y.
Rodney D. Allen	Smethurst & Allen	Philadelphia
W. A. Smethurst	Smethurst & Allen	Washington, D. C.
John C. Sager	Chief Electrical Bureau	Philadelphia
Geo. G. Glenn	Postal Telegraph Co.	Philadelphia
Geo. W. Allen	Postal Telegraph Co.	Philadelphia
W. J. Watson	American Electrical Works	Boston, Mass.
S. B. Condit, Jr.	S. B. Condit, Jr., & Co.	Boston, Mass.
F. W. Street	Quaker City Cab Co.	Philadelphia
F. E. Maybury		West Medford, Mass.
Eugene L. Brown	Stromberg-Carlson Tel. Mfg. Co.	Pittsburg, Pa.
S. L. Reese	Stromberg-Carlson Tel. Mfg. Co.	Pittsburg, Pa.
Wm. C. Banks	Gordon Battery Co.	New York, N. Y.
O. H. Larwill	Keystone Telephone Co.	Philadelphia
Louis D. McCall	Keystone Telephone Co.	New York
Edward Davis	Binghampton T. & T. Co.	Philadelphia
W. L. Hodges	Keystone Telephine Co.	Philadelphia
Ed. L. Barber	Central Construction Co.	Wauseon, Ohio
P. C. Burns	American Elec. Tel. Co.	Chicago, Ill.
C. H. Barney	Monarch Fire Appliance Co.	New York, N. Y.
J. B. Ware	People's Telephone Co.	Detroit, Mich.
Maxime Reber	Federal Telephone Co.	Cleveland, Ohio
H. L. Reber	Kinloch Tel. Co.	St. Louis, Mo.
G. S. W. Brubaker	Standard Tel. & Tel. Co.	Philadelphia
Philip S. Dodd	Electrical Review	New York, N. Y.
Harold W. Fox	New Long Distance Tel. Co.	Indianapolis
C. Keely Hagy	Keystone Telephone Co.	Philadelphia
L. A. Goudy	Northeastern Telephone Co.	Portland, Me.
W. W. Bostwick, Jr.	Lambert-Schmidt Tel. Mfg. Co.	New York, N. Y.
Lambert Schmidt	Lambert-Schmidt Tel. Mfg. Co.	New York, N. Y.
John Roach	Lambert-Schmidt Tel. Mfg. Co.	New York, N. Y.
B. O. Bogert	Lambert-Schmidt Tel. Mfg. Co.	New York, N. Y.
John Alberts	Lambert-Schmidt Tel. Mfg. Co.	New York, N. Y.
W. A. Foss	American Toll Tel. Co.	Cleveland, Ohio
Arthur A. Anderson		Pittsburg, Pa.
Geo. T. Manson	Okonite Co.	New York, N. Y.
H. P. Schmidt	Kellogg Swbd. & Supply Co.	Chicago, Ill.
J. R. McLean	American Toll Telephone Co.	Cleveland, Ohio
Louis A. Stillings	Clark Auto. Tel. Swbd. Co.	Providence, R. I.
S. A. Douglas	American Vitrified Conduit Co.	New York, N. Y.
S. D. Beylard	National Conduit & Cable Co.	Philadelphia
J. J. Downs	North Electric Co.	Cleveland, Ohio
D. B. Wick, Jr.	North Electric Co.	Cleveland, Ohio
J. F. Davis	North Electric Co.	Cleveland, Ohio
Percy L. Clark		Bristol, Conn.
A. R. Lamb		Bristol, Conn.
W. E. Russell	Russell-Tomlinson Elec. Co.	Danbury, Conn.
Chas. W. Scott	Lynchburg Tel. Co.	Lynchburg, Va.
I. M. Post	Manhattan Elec. Supply Co.	New York, N. Y.
H. C. Worstall	Standard Tel. & Tel. Co.	Newton, Pa.
H. H. Stevens	Standard Tel. & Tel. Co.	Newton, Pa.
J. L. Putnam	Clark Automatic Tel. Swbd. Co.	Providence, R. I.
A. Bournonville	McRoy Clay Works	Philadelphia
V. H. Yarnall	Viaduct Mfg. Co.	Baltimore, Md.
E. A. Armstrong	Eastern Tel. & Tel. Co.	Camden, N. J.
Elias E. Ries	U. S. Automatic Tel. Co.	New York, N. Y.
F. H. Dyckman		New York, N. Y.
W. Thos. Booth	Lambert Schmidt Tel. Mfg. Co.	New York, N. Y.
E. E. Wood	American Electrician	New York, N. Y.

Digitized by Google

Viaduct Mfg. Co		Baltimore, Md.
Wm. M. Wharton		Philadelphia
L. N. Cohen		Philadelphia
E. B. Baker	Gray Telephone Pay Sta. Co.	Hartford, Conn.
Geo. F. Trier	Delaware & Madison Cos. Tel. Co.	Ft. Wayne, Ind.
J. M. Heany	American Elec. Mfg. Co.	Philadelphia
G. H. Atkinson	State Tel. Co. of New Jersey	Jersey City, N. J.
W. P. Bowman	J. A. Roeblings Sons Co.	Trenton, N. J.
B. C. Groh	Inter-State Tel. Co.	Trenton, N. J.
L. W. Stanton	Federal Telephone Co.	Cleveland, Ohio
G. W. Elliott	Electrical World & Engineer	New York, N. Y.
F. Milton Shafto	J. A. Roeblings Sons Co.	Philadelphia
C. E. Monroe	Ericsson Tel. Co.	New York, N. Y.
V. Werman	Ericsson Tel. Co.	New York, N. Y.
Mrs. Anney McElroy Brett	Southern Ind. T. & T. Co.	El Paso, Texas
R. H. Witz		El Paso, Texas
Garrett A. Vallee	Valley Electric Co.	Staunton, Va.
Albert Smith		Norristown, Pa.
John D. Hughes		Phoenixville, Pa.
Jas. P. McQuaide	National Conduit & Cable Co.	
John D. Hughes		Phoenixville, Pa.
Frank L. Beam	Citizens Tel. Co.	Columbus, Ohio
T. B. Lee	West Penn Tel. Co.	Pittsburg, Pa.
A. Glass	Home Telephone Co.	Mobile, Ala.
James A. Miller	Sussex Telephone Co.	Newton, N. J.
Wm. E. Hitchcock	Delaware & Madison Cos. Tel. Co.	Muncie, Ind.
D. Scott Quintin	Darlington Elec. & Supply Co.	Philadelphia
Aug. K. Ermsch	Newhall Chain Forge & Iron Co.	New York, N. Y.
H. M. Coulter	S.-C. Tel. Mfg. Co.	Chicago, Ill.
Wm. Geckler	Eastern Tel. & Tel. Co.	Camden, N. J.
Stephen H. Goddard	Electrical Review	New York, N. Y.
W. K. Whiting	Maryland Tel. & Tel. Co.	Baltimore, Md.
J. J. Comer	Maryland Tel. & Tel. Co.	Baltimore, Md.
Edward E. Clement	Patent Attorney	Washington, D. C.
T. J. Lerch	Reading Electric Co.	Reading, Pa.
W. C. Prickett		Dayton, Ohio
J. H. Barlow		Dayton, Ohio
Harry P. Moore	Case-Shawmut Co.	Boston, Mass.
Henry Shafer	International Tel. Mfg. Co.	Chicago, Ill.
W. J. Leggett	D. & W. Fuse Co.	Providence, R. I.

OFFICERS.

President—Hon. James M. Thomas, New York, N. Y.

First Vice-President — Hon. Hugh Dougherty, Bluffton, Ind.

Second Vice-President—C. E. Stinson, Rochester, N. Y.

Third Vice-President—W. H. Durin, Cedar Rapids, Iowa.

Secretary and Treasurer—Hon. J. B. Ware, Detroit, Mich.

First Assistant Secretary—C. E. Wilson, Philadelphia, Pa.

Second Assistant Secretary—E. L. Barber, Wauseon, Ohio.

Third Assistant Secretary—T. B. Lee, Pittsburg, Pa.

ADVISORY BOARD.

Hon. James M. Thomas, New York, N. Y.

Hon. J. B. Ware, Detroit, Mich.

Hon. S. P. Sheerin, Indianapolis, Ind.

Hon. Hugh Dougherty, Bluffton, Ind.

Hon. H. D. Critchfield, Cleveland, O.

Hon. E. B. Fisher, Grand Rapids, Mich.

Hon. S. E. Wayland, Scranton, Pa.

Col. H. C. Young, Columbia, Pa.

E. E. Webster, Minneapolis, Minn.

Princeton, Ill.—The Princeton Telephone Company has been incorporated. Capital stock, $20,000. Incorporators, John T. Brosnahan, Daniel W. Strauss, Harry Humrichouser and Winnie L. Humrichouser.

* * *

Nez Perce, Idaho—Co-operative Telephone Company, limited. The capital stock is fixed at $1,300 and the principal place of business is Steele, Idaho. The directors are J. M. McGee, H. L. Stanley, C. W. McEwan, Preston Ragan and E. F. Goffinet.

Digitized by Google

UPPER OHIO VALLEY NOTES.

W. G. Irwin.

The Steubenville Traction & Light Company has installed a private telephone system on its interurban line between Steubenville and Toronto, O. Each of its cars is equipped with a portable telephone, and every few hundred yards along the line a "jack box" is located on the poles. These boxes are covered with a wooden hood painted white, so that they can be readily seen in the dark. In case it is necessary for the operators of any car to communicate with Steubenville, the telephone is attached to the nearest box when it is ready for use.

The directors of the People's Telephone Company of Morgantown, W. Va., have decided to expend $10,000 in improving its service. This work has already required more than that sum, and altogether about $40,000 will be expended by the company.

The Tri-State Telephone Company, which owns an extensive system in southwestern Pennsylvania, and has for some time been operated by the Telegraph, Telephone & Cable Company of America, under a lease, is to be sold to Pittsburg capitalists for $125,000. The company is making an effort to secure a line into Pittsburg and is now operating in a number of towns in southwestern Pennsylvania, Maryland and West Virginia.

T. B. Lee, General Manager of the West Penn Telephone Company, with headquarters at 407 Fourth avenue, Pittsburg, has recently arranged for numerous improvements to be made by his company, which now operates in connection with the Pittsburg & Allegheny Telephone Company. Already the West Penn Telephone Company has lines in operation between a number of important towns in Allegheny and Washington counties in western Pennsylvania, and extends as far west as Wellsburg, W. Va. The company is now completing its line to Wheeling, W. Va., and from that city will construct lines to all the principal towns in West Virginia.

The Pittsburg & Allegheny Telephone Company has secured important franchises in the Turtle Creek Valley and will extend its lines to Braddock, West Pittsburg, Turtle Creek, Wilmerding, Trafford City and other towns in that section. By this route the company will reach the east along the Pennsylvania railroad.

The strike of the telephone and telegraph linemen in Pittsburg has closed, after a duration of about three months, during which time the service of both the Bell and the Pittsburg & Allegheny telephone companies was greatly interfered with.

The Cambria County Telephone Company, recently incorporated under the laws of Pennsylvania, is securing possession of a number of local companies in Westmoreland, Cambria and Indiana counties in western Pennsylvania, which will be made the nucleus of an extensive system. The company will likely enter Pittsburg over the lines of the Pittsburg & Allegheny Telephone Company.

The Pennsylvania & Mahoning Railway Company, which recently acquired important street railway lines now in operation and building in the Shenango and Mahoning valleys, also secured several local telephone lines as well as electric light companies. These properties are located in Youngstown, O., Sharon, New Castle, and Beaver Falls, in western Pennsylvania.

The Tygarts Valley Telephone Company, incorporated last month at Elkins, W. Va., has begun to build a line to connect Elkins with a number of nearby towns.

A Pennsylvania syndicate, the promoters of which are John Graham and Edmund McCadlish of Neville, Pa., John J. Henry of Philadelphia and others, has secured possession of the Camden Interstate Railway Company, which owns extensive lines in West Virginia. The company also secures control of a number of independent telephone lines.

The Altoona Phoenix Telephone Company of Altoona, Pa., has made some extension to its lines. G. C. Kelchner of Altoona is president of the company.

The Bedford County Telephone Company, operating in Bedford County, Pa., has added a number of new towns to its service and now connects all the towns of importance in the county.

The Cambridge Springs Electric Telegraph & Telephone Company, which connects a number of well-known summer resorts in northwestern Pennsylvania, will remain an independent company notwithstanding the reports that it is to be absorbed.

Digitized by Google

Telephone Magazine

An Illustrated Independent Journal.

MEDINAH BUILDING,

TEL. HAR. 4148. **CHICAGO**

Published on the 15th day of each month.

C. E. KAMMEYER, Publisher.

SUBSCRIPTION

One year, United States and Canada	$1 00
One year, foreign countries	1 50
Single copies	10

COPYRIGHT

The title and contents of this paper are covered by a general copyright. Permission from publishers must be obtained before any article or table is copied, or any illustration reproduced.

CHICAGO, JULY, 1902.

THE NATIONAL ASSOCIATION.

Criticisms of the National Telephone Association and its president, Judge J. M. Thomas, are heard on every hand. We believe that most of the derogatory statements are made by people who are and always have been outside the National Association and from those who have refused to donate a single cent, and from manufacturers who have given very little (and then under pressure) toward the defense in the Berliner and Carty suits. None of the printed articles make any specific statements, nor do they suggest any definite plan for improvement of the largely imaginary mismanagement of the association's affairs by the present officers.

While the TELEPHONE MAGAZINE questions some of the officers' "pernicious activity" in helping to sell certain makes of apparatus, we believe in the future this injustice can be eliminated. All suspicion in the people's mind on this score should be removed by the officers themselves, in taking no part in recommending any make of apparatus in the future, especially as not a single prominent officer or member of the executive committee is a practical telephone instrument man, and, therefore, is entirely unable to judge, the only force in his recommendation to a prospective buyer being the prestige as an officer of the National Telephone Association.

Judge Thomas and his associates have worked hard and conscientiously, as far as we can learn, in the defense of the Independent cause, in the matter of patent litigation, and this, too, with little encouragement from some of the largest operating and manufacturing companies. The majority of the Independent companies have left the raising of cash for a defense fund to the few.

Under all these circumstances it would seem very bad taste to criticise when at the important moments one has refused to either subscribe to any fund, or to advise what course to pursue, when such advice and money would have done some good.

TRADE NOTES.

The Electric Storage Battery Company of Philadelphia announces that Mr. G. F. Greenwood, 34 Empedrado street, Havana, Cuba, has been appointed agent for the sale of "The Chloride Accumulator" in Cuba. All inquiries and business from this section should be forwarded to Mr. G. F. Greenwood and will receive from him prompt attention.

BOND ISSUE.

Owing to the large amount of statistics and other information necessary for this new department, it has been found impossible to commence in this issue. As soon as all the reports from the many companies are at hand and properly arranged, the publication will begin.

Trempealeau, Wis.—The Trempealeau and Buffalo County Telephone Company has re-elected its old officers and increased the capital stock $1,500.

Digitized by Google

MARVELOUS GROWTH OF THE TELEPHONE.

Over Three Million Now in Use--Due to Independent Companies.

The Norwalk Reflector says of the rapid development of the Independent telephone business:

"Very few of our people have as yet come to understand the growth and magnitude of the independent telephone business of this country. Until about the year 1895 the independent companies had made but little headway in the United States, mostly owing to the fact that up to that time the patents had not yet expired. But from this time on their success has been sure and their growth has been little short of marvelous. In 1895 the number of independent 'phones in use was but a few thousand. In May of this year it was estimated that there were in use in the United States three million four hundred thousand 'phones. Of this number over two million were owned and operated by independent companies.

"These figures to-day would fall far short of the actual number in use. Another very important fact in this connection is that this growth has been as firm and stable from a financial standpoint as it has been rapid and great. It is a matter of record that there have been more failures of national banks in the United States within the last year than of independent telephone companies within the last three years, yet there have been twelve times as many independent telephone companies organized during this period as national banks.

"Financial men have come to recognize the telephone as a public necessity and the fact is that telephone stocks are conceded to be one of the most reliable and satisfactory of business investments. In an address before the Bankers' Association in the east a short time since a prominent banker said that telephone securities were to-day the most reliable securities in the stock market; that they were the last affected by hard times. In hard times railway earnings decrease and their stocks drop in value; that street railway earnings would decrease in hard times as people would walk rather than ride, not so with the telephone. Times have never become so hard that people accustomed to the use of the telephone would give it up. That telephone companies conducted on business principles have not only brought fair and satisfactory returns from the operators' standpoint, but have come to be considered safe investments.

"Such is the position the telephone business occupies to-day. The independent properties are invested in largely by local parties. They have strengthened the value of their securities by interesting in their enterprises men of local influence and for this reason their business is upon a permanent and successful basis.

"The people of our cities and towns and our farmers owe it to them that telephones are being furnished at so low a price that nearly everybody can afford to have one. The growth of the business is principally in the independent plants and it is predicted that within the next few years, fully fifteen million telephones will be installed in the United States, of which twelve million will be in the independent companies."

An illustration of the rapid growth of the Independent telephone business in this vicinity is shown in the big gain in the receipts of the Huron County Telephone Company, which have increased nearly 40 per cent. When the present owners, Messrs. W. M. Halliday, F. A. Knapp and C. R. Callaghan, took charge of the property May 1, 1901, the number of 'phones in the four exchanges was as follows: Monroeville 90, Chicago Junction 240, Plymouth 104, New Washington 60.

At the present time the number of 'phones in operation has been increased to the following: Monroeville 115, Chicago Junction 380, Plymouth 181, New Washington 130. This is a gain of 312 'phones in a little over 12 months. Over 20 miles of new toll line have built and the receipts from this source alone last month amounted to $200—a remarkable gain.

The Huron County Telephone Company has been purchased, with many other telephone exchanges by the Local Telephone Company and the transfer will take place July 1. The Huron county company's property is one of the best paying of the many absorbed by the Local.

The Local Telephone Company will be the largest Independent Telephone Company in Ohio that has its exchanges all

Digitized by Google

connected by its own toll lines. The Barber & Brailey Company of Wauseon, who are the pioneers in the independent field, have larger interests in the state, but their exchanges are widely separated and not in a compact body like those of the Local Company which will enter the Independent field with brightest prospects and confident of success.—*Bellevue (O.) Gazette.*

THE TELEPHONE DEVELOPMENT.

FROM THE NEW YORK TIMES.

The convention in Philadelphia during the past week of the representatives of the various telephone interests independent of the Bell combination has focalized public attention upon the rapid growth and present magnitude of the movement to cheapen and improve the telephone service and change for the better the conditions which are the outgrowth of monopoly. It cannot be concealed from the notice of any one for whom the subject has interest that the invasion of the telephone field is gradually attaining the character of a formidable menace to the vested interests which have maintained a scale of charges generally believed to be disproportionate to the cost of the telephone service and inimical to the public interest, as all unreasonable and extortionate charges must be. Everything points to the fact that these competing devices and interests will gradually be merged into strong combinations which the Bell Company will have to reckon with in a serious way. The patent barriers are gradually disappearing, and while the resources of legal ingenuity have been exhausted to secure and retain privileges outside of those intended to be conferred by the patent laws of the United States, there is a limit to the life of patents, however obtained, and their legitimate extension is impossible. One of the methods which has been employed to discourage independent telephone competition seems to have been through the dealers in electrical supplies, who are alleged to have combined in a conspiracy in restraint of trade to increase prices to "outsiders" from 25 to 50 per cent, to restrict production, to unlawfully discriminate in favor of certain purchasers of such supplies, and to boycott or cause to be boycotted dealers and users of electrical apparatus not affiliated with such association. The situation is sufficiently serious to warrant the delegates to the Independent Telephone Convention in adopting unanimously the following resolution:

"Resolved, That the President and Secretary of this Association be and are hereby directed to advise the Attorney General of the United States of the nature and methods of doing business practiced by said organization or combine, and to request the Attorney General of the United States to cause an investigation to be made of the methods of said combination or association, and to tender the assistance of the association, if desired, in making said investigation, and if found to be in violation of law to request the Attorney General of the United States to commence action and prosecute the same to a conclusion with a view of preventing and terminating such unlawful business methods."

The telephone interest is much too important, and it has become too much a necessity in the social and business life of the American people, to make it possible that effective competition can be permanently throttled by the expedients of any clique or combination, however strong. Our people are very patient, and in times of general prosperity those who are imposed upon are absorbed with their own affairs. But such conditions do not last forever. When the pinch of oppression is felt and those who have been victims, perhaps without knowing it, realize that between them and a satisfactory and economical service stands an unprogressive monopoly, some way will be found to break it, and if the independent telephone interests are ready to seize the opportunity when it arrives its coming may be definitely counted on as certain in the not remote future.

Murphysboro, Ill.—T. M. Logan and A. B. Minton, of the Murphysboro Telephone Company, have purchased the lines and business of the Ava and Southern Illinois Telephone Company, of which George O. Dean, of Ava, was the principal stockholder, There are eighty-eight miles of lines in the newly acquired property.

Digitized by Google

A WORD ABOUT POLES TO INVESTORS.

FROM THE CEDAR POLE AGE.

It is a fact perhaps not appreciated in all its bearings by independent telephone operators that the price of white cedar poles (freight excluded of course), has advanced in the last three years over one hundred per cent.

This is in part the result of the great demand caused by increased activity in construction of pole lines for the various electrical purposes, but the chief cause is the fact that the Michigan and Wisconsin cedar forests are becoming exhausted from the drain that has been put upon them and producers are compelled to buy the uncut cedar at rapidly appreciating values. Another factor that has increased the prices of cedar poles is the ever increasing length of haul from the stump to the railroad. A very few years ago, a long haul was a distance of a mile and a half; two miles was unusual. Now, four miles is considered not an unfair distance and hauls of six and even seven miles are made.

We all know that the Independent Telephone movement is now in full swing, but that it has more than fairly begun to fill the popular demand for telephones, no one will claim. In other electrical industries development is also exceedingly active and will be for many years to come.

Every year will find a decreased supply of poles in the cedar swamps, and every increasing length of haul for the producer and a demand on the part of purchasers that certainly will not decrease.

The cedar producing area in the United States is exceedingly limited, east of the Rocky Mountains; the states of Michigan and Wisconsin, together with some Minnesota swamps, practically monopolizing the now comparatively limited supply of a never plentiful timber growth.

Bearing these facts in mind, it is clear that the question of pole line renewals is an important one to consider from the view point of cost at the time the renewal must be made.

Engineers of wide experience have expressed the opinion that a line constructed of four and five inch top poles is far from being the investment that a line constructed of six or seven inch top poles is, taking into consideration the difference in price of the poles themselves (of course labor, wire, etc., will cost the same in either case). We are referring now particularly to long lines in which twenty-five-foot poles are used.

The advantage of a six or seven inch top pole is not by any means entirely in the size of the top. The butt's the thing. The increased stockiness of the pole mentioned means a very materially longer life to the line and less repairs and renewals. It also permits, by reason of its greater stiffness when set, and consequent ability to withstand strain, of running a line around a curve of large radius without the necessity of guying, where five-inch poles would require the additional expense involved by that method of construction. The small additional cost of the larger pole will prove in a few years an investment worth several times the additional initial outlay, while in the reverse case, "money saved will be money lost." A little higher price, and a small additional freight charge paid now will be a source of congratulation before much time has elapsed.

Sometimes the Bell Telephone Company is right. Experience extending over many years in building and maintaining pole lines means something. The Bell Company licensees rarely if ever use anything smaller than a six-inch top.

TELEPHONE SYSTEM SOLD.

Winchester and Rural Lines Purchased by a Syndicate.

The Winchester Telephone Company's plant, covering Frederick and Clarke Counties, in Virginia, and Berkeley, Jefferson and Hampshire Counties in West Virginia, has been sold to the United Telephone Company of Philadelphia. The local corporation was absorbed recently by a Hanover (Pa.) syndicate, and sold by them to the United Company. Extensive improvements, placing the local system in connection with long distance 'phones, will be made at once.—*Richmond (Va.) Dispatch.*

Menomonee Falls, Wis.—The Menomonee Falls Telephone Company; to operate in Waukesha and Milwaukee counties; capital stock, $5,000; incorporators, M. A. Schmoyer, Martin Held and H. R. Schmoyer.

Digitized by Google

TELEPHONE LINES ABSORBED.

THE BELL COMPANY BUYS OUT THE KANSAS TELEPHONE COMPANY.

The Latter Had 350 Miles of Wire in the Territory of Which Fort Scott, Parsons, Pittsburg, Rich Hill and Nevada Are the Principal Towns.

The Missouri and Kansas Telephone Company, usually called the Bell Telephone Company, concluded at Kansas City yesterday two important transactions with Grant Hornaday and C. W. Penniman of Fort Scott, Kas., the men who were back of the projected Independent Telephone Company here which never got farther than the famous unpaid $1,000 check held by Mayor Reed.

The Bell Company bought outright the toll lines of the Kansas Telephone Company, which has 350 miles of wire from Fort Scott to Parsons, and covering a field in Missouri and Kansas, of which those towns and Iola and Garnett, Kas., Rich Hill and Nevada, Mo., and Pittsburg and Girard, Kas., are the principal points.

The value of these toll lines, which Manager Alonzo Burt of the Missouri and Kansas Telephone Company said last night were the best independent lines in Kansas, is about $40,000.

In connection with this deal the Bell Telephone Company made a traffic arrangement with the Independent Telephone Company of Pittsburg, Kas., whereby the Bell Exchange and the competing exchange there will consolidate their plants and one rate will be charged in place of two. Manager Burt of the Bell Company said that it meant that the people of Pittsburg would no longer have to use two telephones.

It was reported that the Mutual Telephone Company of Ft. Scott had also been absorbed, but Manager Burt denied it.

These transactions were brought about, so the persons interested explained, by Mr. Hornaday and Mr. Penniman finding that there was no profit in the toll lines operated without connection with the big Missouri and Kansas Company. And there had been no profits in fighting the Bell Company at Pittsburg. Manager Burt said that his company had been approached by the Ft. Scott telephone promoters frankly along this line and that the big company was willing to take in companies of reasonably good construction. "But most of the Kansas toll lines are of such poor material that we don't want them," said the Bell Company manager. "They are the result of lightning rod agents turning into telephone promoters.

"The Hornaday and Penniman lines were pretty good," he added. "We can use much of them. On Monday we will send out men to begin consolidating their wires with ours where we have lines in the same field. But we did not have much wire in that territory, which was a good reason for our willingness to buy. It means better service for the people.

"Contrary to general belief, we cannot use most of the numerous toll systems in Kansas and this deal does not mean a general absorption of the Independent toll lines. They try to sell to us every day."

REGULATING TELEPHONE CHARGES.

The Supreme Court of the United States has decided a telephone case originating in the District of Columbia. Congress prohibited the local telephone company from charging more than $50 a year, but failed to specify what sort of service should be furnished for the money. The company made separate charges for such appliances as desks, etc., so that the person who got an unlimited superior service had to pay about $100 a year for it.

The main issue between the parties was whether the $50 charge was unreasonably low, and the court sent the case back because the court below had not considered the question of different grades of services.

The court says it had not been shown that the law was intended to cover the improved and superior service rather than the plain, inferior service of a telephone without "extras." The only difference between this case and the Chicago case decided by Judge Tuley appears to be that in one instance Congress prescribed a maximum rate and in the other the Telephone company agreed that it would not charge beyond a certain sum. The difference is immaterial. The Supreme Court would reverse Judge Tuley if it had an opportunity to do so.

Judge Tuley held that where a public service corporation has agreed to render

Digitized by Google

service for a specified sum it should give the public the free benefit of all improved methods of doing business which may be devised. This view of the case commends itself to the public. It does not appear to be inequitable. But it is not the view of the United States Supreme Court. That court holds that when the legislative authority has prescribed a limited charge for a public utility furnished by a private corporation the courts will not go beyond the strict letter of the law in interpreting it. That is, they will allow extra charges to be made for service better than could have been rendered at the time the rate was fixed.—*Chicago Tribune.*

LONG DISTANCE LINES FOR WISCONSIN.

Milwaukee and Oshkosh are the objective points in an effort on the part of independent telephone companies in Wisconsin to perfect a system of long distance service.

This, at least, is in accordance with a statement made this week by Richard Valentine, president of the Wisconsin Independent Telephone Association. There are at the present time over 200 independent systems in this state.

The number of telephone is from three to four times as large as the total in operation by the Bell Company. Besides, the advantage of rural and farmers' telephones is claimed by the independent lines. All that now remains to make the state system as complete as any is to secure Milwaukee.

"A project is now on for the formation of a large independent long distance telephone company to connect up all the different exchanges," said Mr. Valentine while at Oshkosh. "All that remains is for Milwaukee to come in. We have been waiting for that. The capital is all promised. The independent people now have many miles of toll lines and these come within 50 miles of Milwaukee, so that we can go into that city with toll lines within sixty days if we get that city on the list.

"What we need most now and what I hope we will get is an exchange in Oshkosh and one in Milwaukee. The remainder of the state is splendidly covered. It is practically certain that we will be able to install in Milwaukee very soon.

"Oshkosh would receive from us a system costing $100,000 or $150,000 at the least. Each patron would have a complete copper circuit, and long distance instrument. When they tell you our rates do not pay, tell them we know to a cent what it will cost to install and maintain exchanges and say that we are paying dividends.

"There is one feature we have that the Bell people have not and that is telephone connection with several thousand farmers. These farmers have quick service with the central exchange in their respective locality and the business we do with them is surprisingly large. There are about fifty farmers in the vicinity of Janesville who have connection with the Janesville exchange."—*Milwaukee News.*

TELEPHONE FRANCHISE SOLD.

H. H. Evans Makes Transfer to the Interstate.

H. H. Evans et al., who were some time since granted a franchise for the construction of a telephone system in the city of Peoria, have disposed of all their interest right and title to the Interstate Independent Telephone and Telegraph Company, and they are now in full possession. The Interstate Company is incorporated under the laws of the state of New Jersey, and has for some time been engaged in the construction of telephone systems in the west. It is the intention to make the Peoria plant one of the important centers of the Interstate system. The ordinance has been accepted, and the company has deposited the necessary amount of $20,000 to insure the faithful performance of their contract. Their engineers are now here, and are arranging the plans for the work, which will be started in a short time. The sale was made nearly a month ago, but it was not until yesterday that the documents were filed with the recorder in the court house.—*Peoria (Ill.) Transcript.*

Eldon, Ia.—The Eldon Independent Telephone Company of Eldon has filed articles of incorporation with the secretary of state, showing a capital of $25,000. J. R., H. E. and Charles R. Eddy are the incorporators.

Digitized by Google

TALKS AND CROSS-TALKS.

BY THE INSPECTOR.

HINTS TO CORRESPONDENTS.

Write on one side of the paper only, and make sketch or diagram, when necessary Endeavor to give all the facts bearing on the case, so as to enable the editor to Answer intelligently.

Name and address must accompany each letter, not for publication, but for information of the publisher.

198.—Will you kindly answer a question or two for one of your subscribers? The exchange where I am employed has some few local lines that are puzzlers, to yours truly. All circuits are full metallic batteries at subscribers' instruments. Trunk lines are very quiet, also local lines when separate, but some few lines which are very quiet when working locally are fierce when connected on trunk lines which are otherwise quiet, the noise sounding like a very heavy ground. On one trunk line I have heard a noise which sounds much like a very rapidly revolving machine, lasting a few minutes and then disappearing to occur again very soon. By answering above you will greatly oblige an old subscriber.

C. J. C.

Not knowing your switchboard circuits, it is hard to state the cause of your noise, but I am of the opinion that it is due to induction from the ringing generator. Try listening on the trunk lines and pressing the ringing key. I think this will locate your trouble.

199.—I inclose herewith a diagram of two telephone circuits—A′ B′ series circuit, D E bridging circuit—the series line has fifteen 'phones and the bridging line twenty 'phones. From the main line to the two 'phones shown in diagram is one-half mile and the wires of both circuits on same poles. When line B B′ is grounded to G and generator handle turned it rings its own bell, also the bell of the bridging 'phone S, and no other 'phone on the bridging line, but when generator of 'phone S is turned it will not ring the series 'phone A B. We have looked the line over carefully and can find no contact between the two circuits except at G, which is a coil of wire grounded in damp earth. Will you give us an explanation of this? and oblige

H. K.

Your trouble appears to be due to one of two causes, and possibly both. The ringing of bells on 'phone "S" may be by induction or leakage or both combined. Your series line is too heavily loaded. Reduce the number of instruments on this line and I do not think "S" will then ring from generator on series line.

200.—We operate a common return exchange of 130 subscribers, using a Sumter Telephone Manufacturing Company Common Return Self-restoring Drop Board—ring-off drops some series and some bridged. The bridged drops are tubular and iron-clad. About ten days ago we noticed cross talk on our lines, and now it is so bad in all directions that parties talk across lines to each other and we are much worried by conversation getting mixed up. Up to ten days ago we had very little, if any, cross talk. We use No. 14 B B wire and No. 8 copper return. Lines come in in two cables and cables terminate in a Sterling Company's arrester. Lines and return free from grounds, according to test.

A. T. Co.

Your trouble appears to be a case of defective cable. Are you using twisted pair cable? If so, do you use the two wires of same pair for one or two lines? Are you sure there is no dampness in your cables? In common return systems do not use same pair in cable as one side of two lines, and in either common return, ground or metallic circuit systems, be careful to keep your cables at all times free from dampness. I believe your present trouble to be due to dampness.

201.—(1) Can you give me the proportions of the ringing coil shown in Fig. 4, page 23, of the January (1901) Telephone Magazine? (2) Would this coil work best with a "make and break" current, or would a current from a pole changer operate it best? (3) Is not coil No. 4 intended to operate with pulsating current and coil No. 5 with alternating current? (4) Could a coil like Fig. 4 be made from a 500 ohm induction coil? (5) Please show how I could figure the number of bells a coil constructed as follows would ring in the test-room: An 80 ohm bell using .08 ampere and a 1,000 ohm bell .02 ampere. (6)

Digitized by Google

Battery gives 15 amperes at 3 volts. Coil of same style as shown in Fig. 4, core 4 inches long and 5-16 inches in diameter. Primary coil has a resistance of .81 ohms and has 395 turns. Secondary coil has a resistance of 500 ohms and has 4,800 turns. (7) Could a coil like Fig. 5 be made of two induction coils mounted as shown on page 212, Figure 174 of "A B C of the Telephone"? (8) Would a coil as in Question No. 6 ring two 80 ohm bells in series through two miles No. 12 iron wire? (8) Are not ringing coils, as above, in practical use in what is called the "Schwarze" 'phone made by the International Specialty Company, Adrian, Mich.? I trust that you can answer the above.

W. R. L. D. Jr.

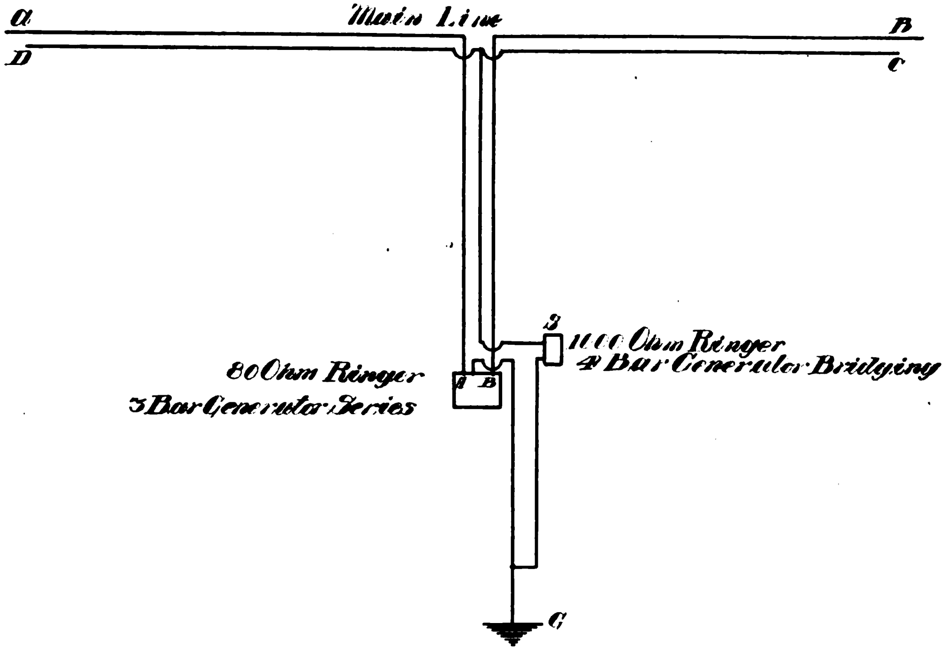

Diagram of Telephone Circuits.

(1) This coil should be about 6inches long ⅜ inch core. Primary should be two layers No. 18 magnet wire. Secondary 8 layers No. 28 or 30 magnet wire silk-covered, well soaked in shellac and baked. (2 and 3.) Neither coil will operate with alternating or pulsating current—direct current must be used. Four or five cells Edison-LaLande is a very satisfactory battery for this purpose. (4) See answer to question No. 1. (5 and 6.) This would have to be determined by experiment, but do not think you could ring any. Resistance of secondary is entirely too high. (7) Yes, with use of circuit breaker, as shown in Figure 5. (8) See answer to 5 and 6. (9) Am not familiar with International Specialty Company's apparatus, therefore, cannot answer this question.

202.—Please give me the formula for making a good cheap dry battery, such as the Mesco.

E. S. M.

The dry battery consists of a zinc cup which forms the negative element. A positive element of carbon is placed in the middle of the cell and insulated at the bottom from the zinc by some insulating material such as hard rubber fiber or glass. The cup is then filled with a paste solution, usually of salamoniac. The paste is a strong solution of salamonia water, flour, cornmeal, starch or some other equally pliable substance. The cell is then sealed with a resinous substance to prevent evaporation. Cells made as above given have an E M F of about 15 volts.

203.—Will you please advise me if the non-inductive shunt for making series lines as good as bridged gives satisfaction in all cases? If so, will you please send me a copy of the December issue of the Telephone Magazine or explain by return mail what this shunt

Digitized by Google

consists of and how used. I am rebuilding a local telephone line of eight miles for the Delaware Valley and Lake Huntington Telephone Company, who have been trying to use a central and series telephone, but never with any satisfaction, and I am making a grounded bridging party line of it. There will be 25 'phones on it, and unless the shunt mentioned can be used on that number of series 'phones satisfactorily, we will have to buy bridging bells. However, I have advised them to buy bridging bells of the 100,000 ohm type with ringers would to 1,000 ohms. I thought a bridging grounded line would be better than a metallic circuit, as it is very woody and there are a lot of shade trees which we are not allowed to trim, so there would be less difficulty in keeping one wire out of the trees, although more noisy. If the shunt is used, I understand the generator must be a good one and that is just the trouble with the series 'phones herein mentioned. However, if you have any suggestions that will help us any, please advise me by return mail. Of course, the company doesn't like the idea of totally losing the series bell, but the firm of whom they bought the bells will not allow them anything for them in exchange, and I see no other way out but to buy new bells from some of your Chicago firms.

T. D. S.

There is no way of satisfactorily operating a series line of 25 instruments. In fact I have my doubts if a grounded bridged line will work with any degree of success. If you must use 25 'phones by all means use bridging instruments and the best that can be made. In ordering you would better specify the work the instruments would be required to do.

204.—Is it possible to get an arc light stronger than those obtained from the best city circuits by ½ inch or ⅝ inch carbons? We wish to collect through a nine-inch condenser the greatest amount of light possible. Can a cluster of arcs be brought near enough to a single point to utilize them through a nine-inch condenser? How are the best lights obtained for search light purposes?

F. H. W. Co.

The candle power of arc lamps depends mainly upon the construction of the lamp. They are usually built to give 1,200 and 2,000 C. P., these being considered the best for commercial purposes, but may be built to any strength. I would advise that you communicate with some company manufacturing lamps. They can give full details as to construction and cost.

A SOLUTION OF G. C. HODGE'S PUZZLE IN MAY NUMBER OF TELEPHONE MAGAZINE.

If the ground connections to the lake from telephone a and b are not good and the upper portions of these same ground wires are good and connect with the water-works system near to which c is grounded, enough current can and probably does rise up through telephone c's ground wire to ring its bell. To overcome the trouble, be sure that a and b's ground wires are good conductors and are well grounded below where they possibly connect with c's ground wire.

WM. H. GAY,
Rockport, Ill.

POST OFFICE TELEPHONES.

A return of Post Office telephone exchanges just completed shows that the total number of subscribers at the end of last year was 2,420, of which North Wales alone is responsible for 1,044. Newcastle heads the list with 437 subscribers, Cardiff comes second with 236, and Newport (Mon.) third with 132 subscribers. Liverpool and Manchester have 29 and 27 respectively, the same as Abergavenny and Bridgend. It is noticeable that in no part of the kingdom has the rate of increase and extension of lines been so great as in South Wales and the western valleys of Monmouthshire. The tariff does not differ greatly, though the use of the penny-in-the-slot machine is on the increase. The above figures, of course, do not include London subscribers, as they were abstracted from a report for a period ending before the metropolitan exchanges were opened. In connection with the movement for extending the telephone system in Mid-Wales a conference of delegates representing the towns of Welshpool, Montgomery, Newtown, Llanidloes, Machynlleth, Aberystwyth, and Towyn was held last week at Aberystwyth, when a resolution approving of the principle was unanimously passed.—*London Electrical Engineer.*

Wausaukee, Wis.—Wausaukee Telephone Company, to operate in Marinette county; capital stock, $10,000; incorporators, E. F. Fox, A. W. Larson and Charles B. Mitt.

Digitized by Google

MONTHLY DIGEST OF TELEPHONE AND KINDRED PATENTS.

EDITED BY ARTHUR F. DURAND, OF THE CHICAGO BAR.

Copies may be had, postage paid, by enclosing 5 cents for each one. Address inquiries in care of this magazine or to the Commissioner of Patents, Washington, D. C.

FRANZ OPENDEK, VIENNA, AUSTRIA-HUNGARY. No. 702,669, June 17, 1902. SOUND-STRENGTHENING APPLIANCES FOR TELEPHONE STATIONS.

This is a scheme for augmenting or increasing the current impulses in the secondary of the induction coil. The inventor accomplishes his object by providing the induction coil with cores, and by employing a vibratory armature having primary and secondary windings, the latter being in series with the secondary of the said induction coil. The windings are so arranged that the induction cores present opposite poles to the armature. With this arrangement, the current impulses in the primary of the induction coil cause a corresponding vibration of the armature, which in turn produces an induced current in the secondary of the armature windings. As the receiver, the secondary of the induction coil, and the secondary of the armature are all in series, the result is supposed to be an increased or augmented current in the receiver circuit. The accompanying diagram is the only drawing shown in the patent, and illustrates the circuit connections of the induction coil and its armature.

Supposing the primary circuit 1 to be closed, the core *e* will be magnetized by the coils *d*, and when the microphone *c* is spoken to the resistance of the circuit will vary, and the variations of the strength of current thereby caused will also produce variations of the magnetic force. By the magnetic force the armature *f* is moved toward the core *e*, the poles of which are covered with disks *e'*, of cotton or paper, by which immediate contact and permanent adhering of the armature is prevented. While the armature *f* moves toward the core *e* it compresses the coiled spring *f'* and stores power in the same, and as soon as the magnetic force diminishes, the stored power acts for lifting the core. By the following increase of magnetic force the armature *f* is again caused to move toward the core *e*, and so on.

If the work of repeatedly attracting the armature *f* and compressing the spring *f'* were to be done at the expense of the energy of the current flowing through the primary coils of the bobbins *d*, the said current would thereby be weakened, and consequently the induced current, too, by which the telephone-receivers are actuated. Now in order to attain the object in view, which is to strengthen this latter current, I provide a special galvanic battery *a'* for supplying the energy re-the core *e*. Every time the armature *f* By two bobbins *g g*, having their thick wire coils included in the circuit 2 of the battery *a'*, the armature *f* is so magnetized as to oppose unlike poles to the poles of the core *e*. Every time the armature *f* moves toward the poles of the core *e*, and thereby puts the spring *f'* in tension, energy is spent by the current flowing through the primary coils of the bobbins *d d*. Consequently an alternating current of the same form and phase as that induced in the secondary coils of the bobbins *d d* will be induced in the secondary coils of the bobbins *g g*. This current can therefore be utilized for strengthening the current flowing through the line, this being obtained by connecting the secondary coils by wires 3 3. The effect of this strengthening of the secondary current is different from that which would be obtained by strengthening the galvanic battery *a*, as in the latter case too strong a primary current would flow through the microphone *c*, which thereby would be heated and deranged in its normal operation.

A further strengthening action upon the secondary current for the purpose of louder transmission of speech is obtained by extending the bobbins *d d* beyond the poles of the core *c*, as shown, and arranging the ends of the armature *f* within the extended bobbins *d d*. The magnetized armature *f* oscillating within the bobbins *d* induces in the secondary coils alternating-current waves, and as the oscillations are in unison with the undulations of the

Digitized by Google

primary current flowing through the microphone, the said alternating current adds itself to the alternating current induced by the undulating current.

As in this action the ends of the armature *f* are intended to act upon the secondary coils of the induction-bobbins *d d*, the extended ends of the said bobbins have the secondary coils of thin wire arranged inside the primary ones, while in the lower portions of both bobbins *d d*, intended to magnetize the core *e*, the primary coils of thick wire are arranged inside, as usual. All parts being in the position shown in the drawing, an electric current arriving through the line-wire 4 will pass through the lightning-arrester *h* and the wire 5 to the metallic spring-lever *i*, which is kept on the contact 6 by the telephone *j* suspended from it. From the contact-piece 6 the current flows through the wires 7 and 8 to the contact-piece 9, on which bears the metallic spring-key *k*. Thence the current passes through the wire 10 to the call-bell *l*, of well-known construction, and operating this call-bell it flows through the wire 11 to the earth *m*.

The operator called by the signal unhooks the telephone-receiver *j*, whereby the spring-lever *i* is unloaded and permitted to swing upward under the action of its spring. The lever *i* then touches the contact-piece 12, while the spring *n*, secured to it and insulated from it by means of a block *o*, made of insulating material, touches the contact-piece *b*. It will be seen that thus the primary circuit 1 is closed at *b* and the secondary circuit at 12. The connections of this latter are as follows: Line-wire 4, lightning-arrester *h*, wire 5, lever *i*, contact-piece 12, wire 13, telephone-receiver *j*, wire 14, binding-clamp 15, secondary coils of the bobbins *g*, *d*, *d*, and *g*, binding-clamp 16, wire 17, second telephone-receiver *j'*, wire 18, lightning-arrester *h*, wire 11, and earth *m*.

For calling a corresponding station the operator presses downward the metallic spring-key *k*, thereby causing it to recede from the contact-piece 9 and to bear

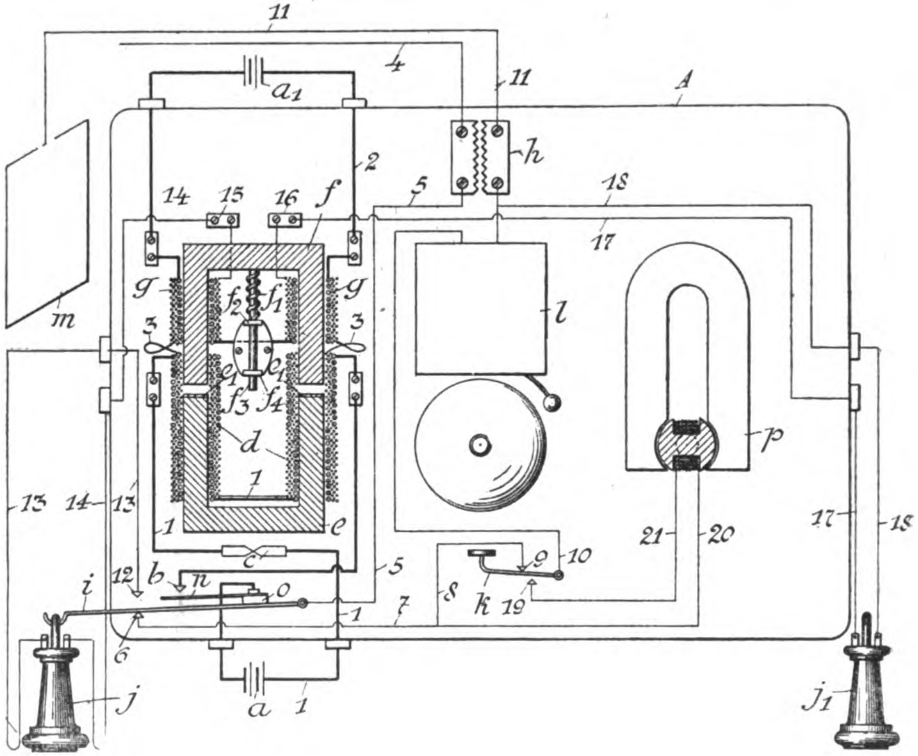

702669—Sound Strengthening Appliances for Telephone Stations.

Digitized by Google

against the contact-piece 19, and while keeping the key *k* depressed he operates the magneto-electric current-generator *p*. The electric current thus generated flows through the wires 20 and 7, the contact-piece 6, the lever *i*, the wire 5, and the lightning-arrester *h* into the line 4, while the other pole of the generator *p* is connected with the earth *m* by the wire 21, contact-piece 19, key *k*, wire 10, call-bell *l*, lightning-arrester *h*, and wire 11.

ANTHONY VAN WAGENEN, SIOUX CITY, IOWA. No. 702,751, June 17, 1902. TRANSMITTER.

This is a signal-sending device adapted more particularly for use in connection with automatic exchanges. It is provided with a rotary contact-wheel, a dial and pointed, and also a spring-restored push-button. To call up a certain station it is necessary to turn the pointer to the correct number on the dial, so as to set the stop mechanism, and to then push in the button. The spring, in returning the button to its normal position, turns the contact-wheel until the rotation is stopped by the said stop device. As the device as a whole is somewhat complicated, the patent contains a lengthy description, quite a number of claims, and several drawings.

In the operation of the instrument the pointer *i* is set at the desired position on the dial and the rack-bar *q* is pressed inward to the fullest extent, so that it encounters the finger *v* and so pushes the pawl *u* away from the wheel *k* and pushes the locking-plate 2, then in engagement with the pin *z*, upwardly slightly, so as to release the tripping-piece 11, which has been in a curved position, having been held in such position by the hook-shaped lip 12 of the locking-plate 2. Said spring tripping-piece then springs out from under said lip into the position shown in dotted lines in Fig. 1. When the pressure on the button at the end of the rack-bar is relieved, the pawl *u*, being pressed in by the spring *w*, engages the wheel *k*, so as to lock it and the pointer in the position to which the pointer has been set. The locking-plate 2 at the same time releases the pin *z* and wheel *l*, and the latter begins to turn under the influence of spring *o* and continues to turn until its pin *x* encounters the pin *y* of the wheel *k*.

As each tooth of the wheel *l* encounters brush 3 it completes an electric circuit through wires 4 and 5, which circuit is broken when that tooth breaks contact with the brush. Rotation of the wheel *l* therefore transmits through the line a number of current impulses corresponding to the number of teeth of said wheel which pass the brush 3. Therefore when the wheel *l* is arrested by its pin *x* encountering the pin *y* the call indicated by the position of the pointer has been sent in. After the rack-bar *q* has been released,

Fig. 1.

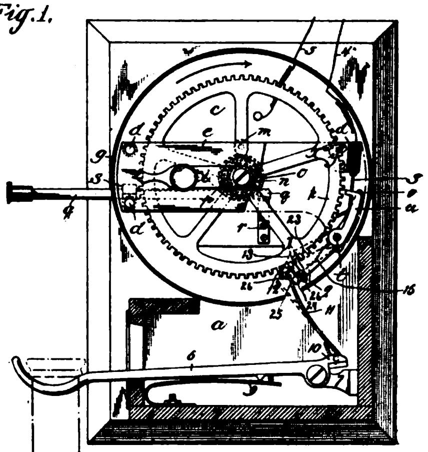

Fig. 2.

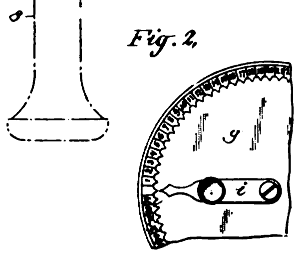

702751—Transmitter.

as above described, after the setting of the pointer the receiver 8 may be removed from its hook, and after the buzzing noise caused by the operation of the regulating-train of gears, hereinafter mentioned, and by the passage of the brush 3 over the teeth of wheel *l* has ceased, indicating that the desired connection has been made, conversation may begin. By the upward movement of the hook 6, caused by the removal of the receiver, the tripping-piece 11 is moved under the lip 12 of the locking-plate 2. When the receiver is returned to its hook upon the conclusion of the conversation, the lever 6 will be

Digitized by Google

depressed and the tripping-piece 11 will be raised, and the latter in rising will engage the lip 12 of the locking-plate 2 and lift said plate, and in rising said plate will move the pawl *u* out of engagement with the dial-wheel *k*, thereby releasing both said dial-wheel and the contact-wheel *l* and permitting them to turn until the pin *z* on the contact-wheel *l* encounters the lip 13 of the locking-plate 2.

As the tripping-piece 11 is thus raised it will also be sprung into the curved position shown in Fig. 1, because one end of the tripping-piece 11 is held by the lip 12, while the other end, being firmly secured to the portion 10 of the receiver-hook 6, is carried by the latter in a curved path. The tripping-piece is thereby given the tension required to enable it to spring out and away from the locking-piece 2 when the rack-bar *q* is pressed in and engages finger *v*. Shortly before the pin *z* encounters lip 13 of the locking-piece 2 it encounters a hinged pawl 14, forming substantially a portion of the locking-plate and movable with respect thereto, and having a spring 15 which presses it upward. When the pin *z* encounters this hinged pawl 14, it presses it outward, and when the said pin has passed the pawl 14 the spring 15 causes the latter to rise behind the pin *z* and so prevent rebound thereof and of the wheel *l*.

In the movement of the contact-wheel *l* which occurs while the pointer *i* is returning to zero the circuit of the instrument is completed and broken again a sufficient number of times to restore the automatic switchboard instrument to zero again. When the transmitter is not to be used in an automatic telephone system, the lever 6 may be operated by hand, or any other suitable releasing device for operating the locking-plate 2 may be employed. It will thus be observed that in the operation of the instrument the signal-transmitting mechanism cannot be released and the desired signal transmitted until the rack-bar *q* has been pressed in to the farthest limit of its movement. This insures full tension of the spring for each operation.

The regulating-train of gears by which the speed of shaft *f* is controlled is of simple character. It consists of a gear 16, intermeshing with a pinion 17, to which is connected a gear 18, intermeshing with a pinion 19, to which latter pinion is connected an escapement-wheel 20, engaged by an escapement-lever 21. Upon the shaft of this escapement-lever there is a small pendulum 22. The operation of such a regulating-train is well known and need not be particularly described.

The receiver-hook may operate contact-points of the telephone-circuit in the ordinary manner, and for that reason should be insulated from the cricuit-varying mechanism of the instrument. I do not show contact-points operated by the receiver-hook, as such contact-points form no part of my present invention, but I show the receiver-hook insulated from the circuit-varying mechanism. This may be accomplished in various ways. As shown in the drawings, that portion 24 of the locking-plate 2 with which the tripping-piece 11 contacts is separate from the main portion of said plate and is insulated thereform by insulation 25. It is held in place by screws 26 26, insulated from said section 24. But I do not limit myself to this particular method of insulating the receiver-hook from the circuit-varying mechanism. Neither do I limit myself to the other details of con-

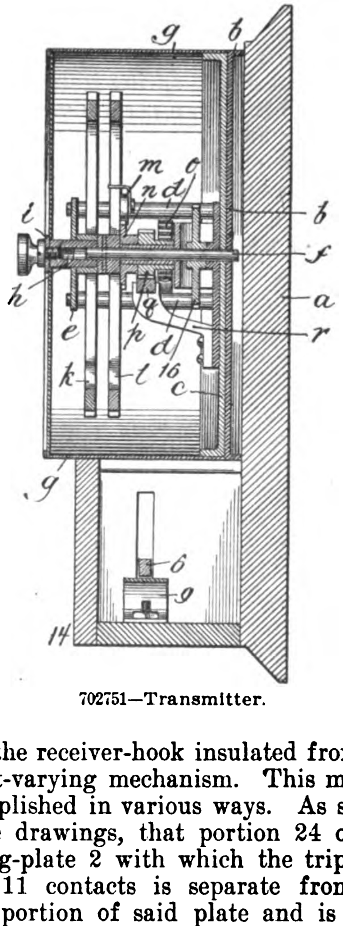

702751—Transmitter.

Digitized by Google

struction and arrangement herein illustrated and described.

LAMBERT SCHMIDT, WEEHAWKEN, NEW JERSEY. No. 703,004, June 24, 1902. FIELD TELEPHONE SET.

This is a portable telephone set for military purposes. The principal object of the invention is to prevent displacement of the receiver while the set is being transported. This is accomplished by providing a pair of jaws which close around and hold the receiver on the hook when the cover of the box is closed. In the drawings, Figure 1 is a front view of the set with the cover swung down. Figure 2 is a vertical section on the line 2 2, in Figure 1, but showing the cover closed and the receiver clamped between the two jaws.

The set of instruments may comprise the usual magneto-box with its binding posts *a*, bell *b*, hook-switch *c*, and transmitter *d*, the latter being mounted, if desired, upon a pivoted arm *e*, the electrical connections being effected in the usual manner. It may further comprise a battery-box *f*, containing the desired number of dry cells, and a receiver *g*, of usual form, being adapted to engage the hook-switch *c*, as usual, and by its weight when the case is in its normal vertical position to hold the hook-switch down, and thereby keep the battery-circuit open. The several instruments are inclosed within and supported by a case made of any suitable material, which is made in two parts —a main part or box *h* and a cover *i*, the latter being preferably hinged to the former at the bottom, as indicated at *k*.

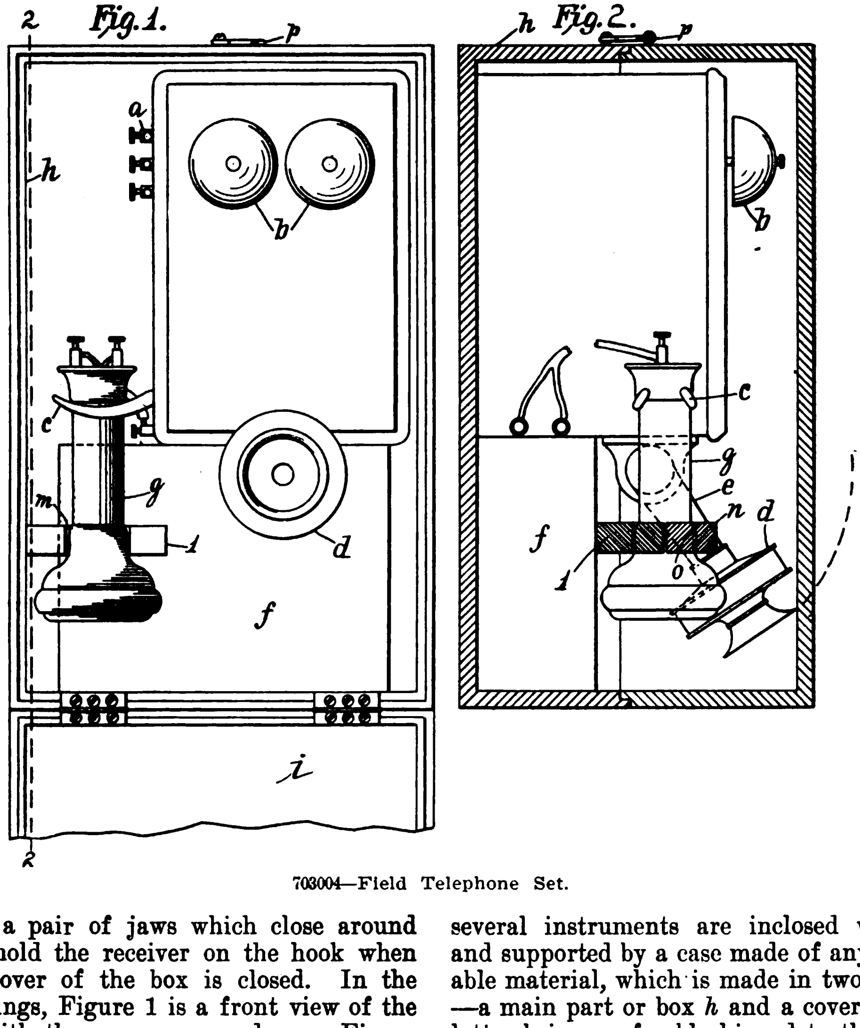

703004—Field Telephone Set.

For convenience in use the box *h* and the cover *i* are preferably proportioned about as shown, the instruments thus being readily accessible, while the cover is not in the way when the case is open. At a suitable point in the box *h* is fixed

a block or bar *l*, which is notched, as indicated at *m*, to receive the stem of the receiver, such bar or plate being so placed as to engage the enlarged end of the receiver when the receiver is on the hook and the latter is down or open. A similar bar or block *n* is secured to the cover *i* to move therewith and to co-operate with the bar or block *l* to lock the receiver in the position represented in the drawings, and thereby to lock the hook-switch *c*, which is then engaged by the receiver, down or open. The bar or block *n* is preferably formed with a notch (indicated at *o*) to engage the receiver.

William J. Bell, Baraboo, Wisconsin. No. 703,980, July 8, 1902. Combined Switch and Lightning Arrester.

This is an arrangement whereby the switch for cutting off the instruments may also be employed for keeping the opposing carbons of the lightning-arrester in good condition. One carbon is mounted on the switch-lever, while the other is of some length and is held in any suitable manner. Each time the switch is turned to either connect or disconnect the instrument from the line, the small carbon on the switch is rubbed across the surface of the larger carbon. In this way, the ordinary use of the switch is attended by a cleaning of the carbons. The drawings show the switch in two positions, and also show a detail of the carbons.

A is the line-wire of a telephone system; B, a conductor leading from a contact-piece C to a telephone instrument D; E, a carbon plate mounted on rubber F or otherwise suitably insulated and electrically connected by a wire G or other suitable means with the ground, and H a lever, preferably of metal, which, in conjunction with the carbon plate E, connected with the ground, constitutes my improved combined switch and lightning-arrester. The said lever is electrically connected with the wire A, and consequently it will be seen that it will effect electrical connection between the wire A and instrument D when it is in the position shown in Fig. 1 and interrupt such connection when it is in the position shown in Fig. 2. On its arm remote from the contact-piece C the lever is provided with a carbon portion E′.

This latter rests close to the carbon plate E, as best shown in Fig. 3, when the lever H is in the position shown in Fig. 1 and also when said lever is in the position shown in Fig. 2. By virtue of this it will be observed that irrespective of the position of the lever H any heavy charge of atmospheric or other electricity received by the wire A will be conducted through the lever H, carbon portion E′, carbon plate E, and wire G to the ground, and hence effectually prevented from shunting across to and injuring the instrument D. It will also be observed that incident to the movements of the lever H

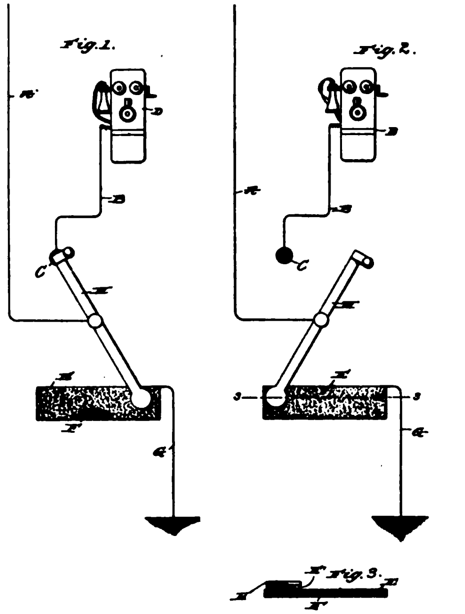

70398—Combined Switch and Lightning Arrester.

to make and break connection between the wires A and B the carbon pieces E E′ will be cleaned of any substance left thereon by the previous passage through said pieces of a heavy charge of electricity. From this latter it follows that the said carbon pieces will always be in condition to prevent a heavy charge of electricity from shunting across to the instrument, which is an important advantage.

Charles Selden, Baltimore, Md. No. 704,127, July 8, 1902. Combined District Telegraph and Telephone Signal.

This is an arrangement whereby an ordinary call-box may be employed for sending a special signal when the subscriber

Digitized by Google

desires to communicate with the operator telephonically. To accomplish this, the inventor provides the side of the rotary disk or wheel of the call-box with either spaces or strips of insulation, and he also provides an extra contact-spring which bears upon the side of the wheel. This extra contact-spring is brought into the circuit by the removal of the telephone from the hook-switch, and the rotation of the wheel then produces a special signal by which the operator instantly understands that the subscriber desires to use his telephone. The diagram shows the call-box mechanism connected up by line-wires with the signal-receiving devices at the central station.

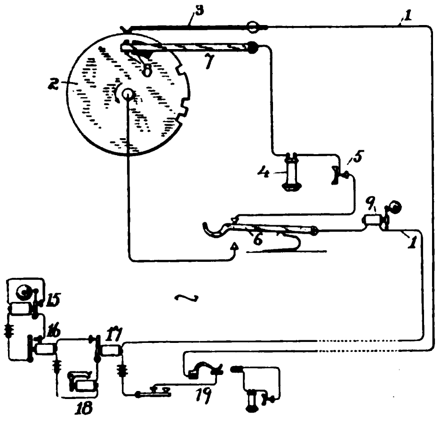

704127—Combined District Telegraph and Telephone Sign.

When it is desired to communicate orally with the district-telegraph office to give any particular directions, the switch 6 is made to shunt the spring 7 into circuit by lifting the telephone from the hook, and the box is then pulled in just the way that it is pulled to call a messenger. The circuit through the box is then from spring 3 to the wheel 2 and through spring 7; but the signal which goes to the central office is first made by the break or breaks in the body of the wheel, after which the number designating the call-box is signaled by means of the breaks in the periphery of the wheel 2. The central-office attendant hearing the distinctive signal sent by the spring 7 includes his telephone in the circuit and receives the order from the subscriber, whose telephone apparatus has already been placed in the circuit in the operation of changing the circuits to cause the box when pulled to send a distinctive signal as well as the box-number.

GUSTAV N. OEHMEN, BROOKLYN, N. Y. No. 704,361, July 8, 1902. ELECTRIC CUT-OUT.

This is a cut-out involving a trigger for holding a removable conductor in position to normally close the circuit. The removable conductor is subject to spring tension, and the trigger is held in place by an expansible substance inclosed within a heat-coil. When an abnormally large current traverses the circuit, the heat generated in the heat-coil expands the substance and causes the trigger to release the removable conductor. In this way, the circuit is opened as a result of the expanding of the substance, rather than by the fusing or disintegrating of a joint or connection.

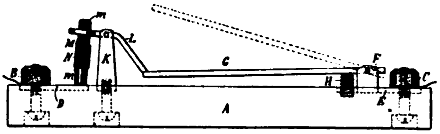

704361—Electric Current.

A is a base or block, of porcelain or other insulating material, carrying two terminals or binding-posts B and C, set in metal plates D and E and secured to the base in the usual manner. From the plate E extend uprights F, which afford bearings for the fulcrum of a lever G, upon which latter a spring H acts, tending to raise its free end. Adjacent to the other plate D is a bracket or pair of standards K, forming a support for a pivoted lever L, the longer arm of which is bent downwardly, so as to engage with and form a retaining-catch for the end of the lever G. In the short arm of the catch-lever L is a tapped hole, in which is inserted the threaded end of a rod M, of some material, preferably insulating, which has a high coefficiency of expansion, such as hard rubber, and which has metallic ends *m m*. A wire N, of German silver or other metal which has a relatively high specific resistance, is wound around the insulating middle portion of the rod M, and its ends are soldered or secured in electrical contact with the two metallic ends *m m*.

When the device is to be used, the sev-

Digitized by Google

eral ends of a circuit are connected to the binding-posts B and C, respectively, and the lever G depressed to bring its end under that of the catch-lever L. The extent of the engagement between these two elements is determined by the adjustment of the rod M in the threaded opening of the lever L, and as the lower end of the rod M rests upon the plate D the parts are firmly held in this position. Under these conditions the circuit is completed from binding-post B through plate D, the lower metallic end of rod M, the wire N, the upper metallic end of rod M, lever L, lever G, and plate E to binding-post C; but should an abnormal current pass through the wire N it is heated, since it has a higher resistance than the other parts of the circuit, so that the rod M is expanded longitudinally, with the result that the short arm or lever L is raised and its long arm depressed out of engagement with the lever G.

The latter is therefore released and thrown by the action of the spring H to the position shown in dotted lines, which is well beyond the limits of any possible arc, and the circuit thereby broken. Should the abnormal current be very excessive or occur so suddenly that the rod M does not expand with sufficient rapidity to afford the proper protection to the circuit, the wire N may be fused and thus interrupt the circuit; but the primary object of the instrument is to serve as a thermostatic cut-out which operates by a predetermined heating of a portion of the circuit. This provision is an important one, as it has been found in practice that an ordinary fuse will frequently carry a dangerous current which heats without destroying it.

JOSEPH J. O'CONNELL, CHICAGO, ILL. No. 704,268, July 8, 1902. COIN COLLECTOR FOR TELEPHONE AND TOLL LINES.

This is an improvement in coin collectors, originally designed by Mr. Albert M. Bullard. In order to prevent the armature of the magnet from fluttering when the coin is released from the shutter, Mr. Bullard proposed to employ a shunt around the contacts and to control this shunt by relay contacts operated by the armature. Mr. O'Connell now dispenses with this shunt circuit, and secures the desired end by employing con-

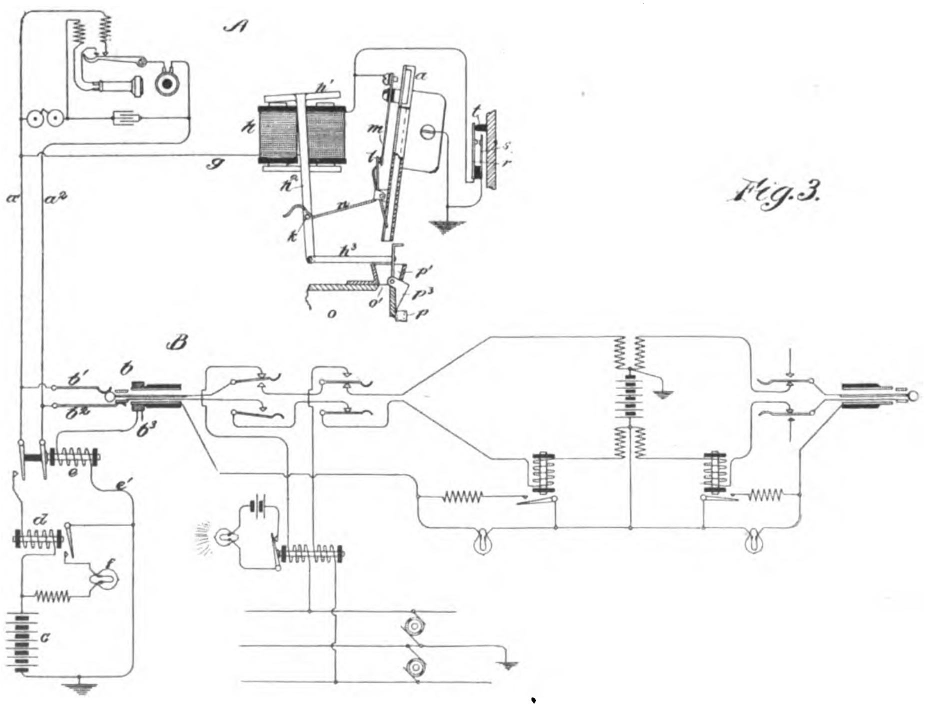

704,268—Coin Collector for Telephone and Toll Lines.

Digitized by Google

tacts which are initially closed together by the depositing of a coin in the chute, and which are then mechanically maintained in contact with each other independently of the coin, after the latter has been released. In the patent, there are two views illustrating the construction of the coin collector, and a third figure, which is a diagram, illustrating the circuit connections and mode of operation. The diagram alone is reproduced.

A telephone-line consisting of two branches a' a^2 extends from the subscriber's station A to the switchboard B at the central office of the exchange, the branches a' a^2 of the telephone-line terminating in line-springs b' b^2, respectively, of the spring-jack *b*. A line-signal battery *c* is connected with the limb a' of the telephone-line through the helix of the line-relay *d* by way of the armature and back contact of a cut-off relay *e*. A signal-lamp *f* is included, together with a source of current, in a local circuit controlled by the line-relay *d*, so that when the said relay is energized by current from the line-signal battery *c* flowing through the same the local circuit will be closed and the signal-lamp lighted. The helix of the cut-off relay is included in a grounded branch e' from the third contact or test ring b^3 of the spring-jack *b*, so that when an ordinary connecting-plug the sleeve-contact whereof is connected with a grounded source of current is inserted in the spring-jack the cut-off relay will be energized to remove the signal apparatus from the telephone-line circuit.

The telephone talking and signal-receiving apparatus at the sub-station A is of the usual character and need not be particularly described.

The limb a' of the telephone-line is connected at the subscriber's station with a grounded branch circuit *g*, which includes the helices of the polarized electromagnet *h* and is normally open, being controlled by coin-actuated contacts *l m*. The engagement of these two contacts with one another to close the circuit of the branch *g* to ground, besides being caused by the deposit of a coin, may also be effected by the movement of the armature of the magnet *h* in a manner which I will presently describe. The closing together of said contacts by any means will complete the circuit of the grounded line-signal battery *c* at the central office through the line-relay, and will thereby cause the signal-lamp *f* to be lighted, thus notifying the operator that subscriber A desires a connection.

CHARLES E. SCRIBNER, CHICAGO, ILL. Reissue No. 12,007, Reissued July 1st, 1902. SUPERVISORY SIGNAL FOR TELEPHONE SWITCHBOARD.

This is a reissue of one of Mr. Scribner's former patents. The original patent is numbered 638,426, and was issued December 5, 1899.

The invention relates to the supervisory relay, which consists of a drop bridged across the cord-circuit and provided with two windings. The bridge also includes a source of current and one winding of a relay which controls a normally open switch-point in one talking strand of the cord-circuit. The patent contains only the one diagram.

In accordance with this invention a supervisory signal *g* is associated with each pair of plugs or plug-circuit. The circuit connections of this signal with the plug-circuit are controlled by a relay *h*, provided with an armature-lever h', playing between two contact-anvils h^2 and h^3. This relay has two windings h^4 and h^5. The former of these windings is connected in a conductor 3, leading from the front contact h^2 of the relay to the sleeve of the answering-plug *d*, while the latter winding h^5 is connected in a conductor 4, leading from the switch-lever h' to the sleeve-contact of calling-plug d'. The tip-contact pieces of the plugs are united by a continuous conductor 5. The supervisory signal *g* is provided with two windings, which are included serially in a conductor 6, which forms a bridge of the plug-circuit, uniting conductors 4 and 5 thereof.

A source of current *i* is interposed in the bridge-conductor between the windings of the signal *g*. These windings should of course be of high impedance in order that the shunting of telephonic current through the bridge may be prevented. One of the plugs, preferably the answering-plug *d*, rests in a seat provided with a plug-seat switch *k*, which is designed to close a circuit while the plug is in its seat. This switch controls the continuity of a conductor 7, terminating at one

extremity in the contact-point h^3 of relay *h* and connecting at its other extremity with that pole of battery *i* which is connected with conductor 6 of the plug-circuit or otherwise in any suitable way to bring the battery into a local circuit, including one or both windings of the supervisory signal when the contacts h' h^3 are closed, the connection being shown as extending to earth.

While the apparatus of the switchboard is idle the magnet *h* is inert and a local circuit is formed from battery *i* through one winding g' of the supervisory signal, through wire 6, through the contacts h' h^3, and through wire 7, the contacts of plug-seat switch *k* being closed. The magnet of signal *g* is thus excited, and the indicator of the signal which is designed to appear when the magnet is inert is hidden. An operator on observing a call-signal displayed in one of the line-indicators follows the usual steps of inserting answering-plug *d* into the spring-jack of the calling-line, obtaining the subscriber's order for connection with another line, inserting calling-plug *d'* into a spring-jack of the line called for, and operating the ringing-key *e* to ring the bell at the station thereof.

Inasmuch as these operations are familiar to those skilled in the art of telephony, I do not pause to trace them in detail. When the plug *d* is raised from its seat, the plug-seat switch *k* breaks the conductor 7, interrupting the current in the local circuit and the indicator of supervisory signal *g* comes into view. When the plug *d'* is connected with the line called for, the circuit through signal *g* remains broken, being open at the telephone-switch at the substation until the called party, responding to the call, takes the telephone for use. Then the telephone switch at the substation closes circuit between line conductors 1 and 2, thereby completing a circuit through the supervisory signal and the relay *h*, which may be traced as follows: from battery *i*, through a portion of conductor 6, including a winding of the supervisory signal, thence through conductor 4 of the plug-circuit, including the winding h^5 of relay *h*, to line conductor 2, returning by line conductor 1 and finding circuit to battery *i* through a portion of conductor 5 and wire 6, including the other winding of supervisory signal *g*. The signal thus becomes excited, and its indicator is concealed.

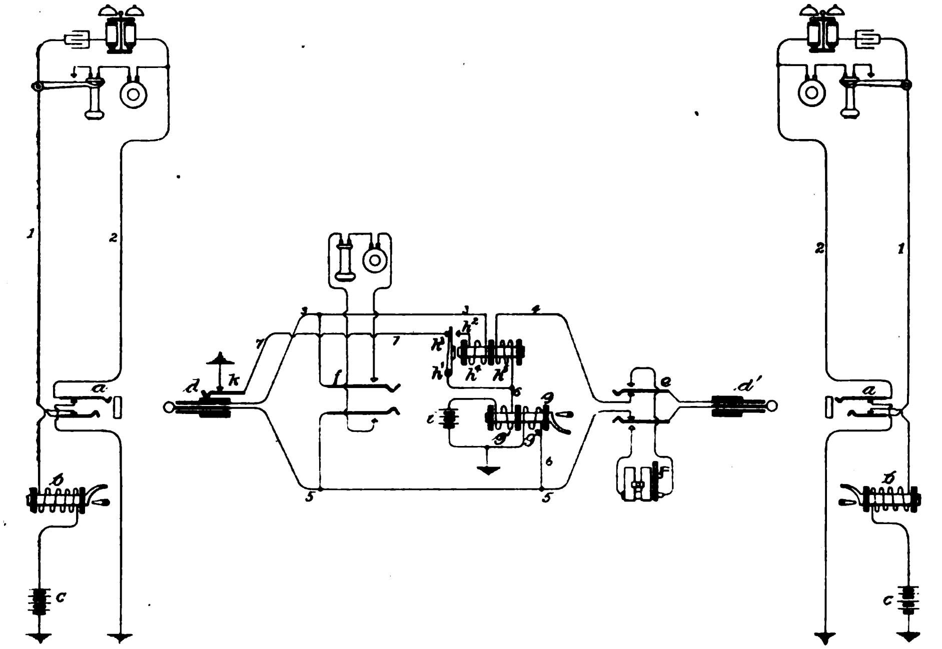

Reissue 12007—Supervisory Signal for Telephone Switchboard.

Digitized by Google

This signifies to the operator that the party called for has responded to the call. At the same time magnet *h* becomes actuated, being excited by current flowing in the winding h^5, and brings its armature-lever *h'* into contact with the anvil h^2. This movement of the armature thus unites conductors 3 and 4, forming a continuous conductor between the sleeves of the plugs and between the two line conductors 1 of the lines to be united. Thereafter current flows from the bridge 6 to both the called and the calling lines. The magnet will therefore remain excited as long as the telephone at either station is in use. The current traversing the windings of the supervisory signal *g* is also rendered independent of the condition of the apparatus at either station alone, so that the magnet will remain excited and the signal will remain hidden as long as either telephone is off its switch. When at the termination of conversation the users of the telephones at both stations replace their receiving instruments on the telephone-switches, current through the windings of the supervisory signal *g* and of the relay-magnet *h* is interrupted and the magnets of both become inert.

The supervisory signal then displays its indicator, and this second display of the indicator shows the operator that the use of the line is finished. She therefore removes the plugs *d* and *d'* from the spring-jacks into which they are inserted and places them in their resting-seats. The replacement of plug *d* in its seat causes the switch *k* to close the break in wire 7, and inasmuch as the armature has come to rest on its contact h^3 completes the cirsuit through the supervisory signal and effects the concealment of its indicator. Thus the indicators of all signals associated with plugs which are not in use are hidden. The display of an indicator immediately after the establishment of connection with a line indicates that no response has been made to the call sent. The signal is hidden when the called party takes the telephone for use, and the signal is thereafter displaved only when at the termination of the use of the line both telephones are returned to their supports. This invention thus avoids all confusion of signals and eliminates all indications on the part of the signals, excepting those which are found in practice to be essential to the proper establishment and supervision of the connection.

FARMERS' LINES IN OHIO.

The farmers of Richland and Ashland Counties have organized a local and long distance telephone company, called the Monroe Telephone Company, for the use of farmers and people who live in the rural districts. New lines are being extended on nearly all of the roads at a distance of from ten to fourteen miles from the Central Station.

The telephone is indispensable to the farmers who live a long distance from a telegraph and railroad station. Each farmer builds a half mile of line consisting of thirteen poles, pins, insulators, and cross arms for each pole, also a half mile of No. 11 galvanized wire, and the Board of Directors approves of none but an A1 telephone.

The charter constitution and by-laws of this company provides that no subscriber can own more than three shares of stock and thereon have one vote only, so that by this wise plan the stock will be in the hands of its subscribers and two or three persons cannot buy up the stock to control the company's affairs.

The City of Mansfield, Ohio, is a large business center and many railroads center there. This company gives very desirable communication by telephone with a large country population. The Central Union Telephone Company also has a large exchange in the City of Mansfield, Ohio, of over 1,700 telephones. This company has given the Monroe Telephone Company advantageous connections with all of their 'phones in the city.

South Omaha, Neb.—The South Omaha Independent Telephone Company, with an authorized capital stock of $75,000, has filed articles, the incorporators being W. S. King, Thor Jorgensen, A. A. Wright, Thomas Healey and Frank Crawford.

* * *

Newport, Neb.—The Newport & Mariaville Telephone Company has incorporated with a capital stock of $1,500. The incorporators are George M. Anderson, W. H. Allen, F. L. Hutton, M. E. Smith, James Vargason, E. L. Peters and C. M. Thompson.

Digitized by Google

PERMANENT AND ELECTRO MAGNETS.

BY F. A. WEGNER.

OF INTEREST TO WORKERS ON POLARIZED MAGNETS.

A motor can be cut in series in the line causing it to break and make the circuit, thereby transforming a *continuous* direct current into an intermittent direct current. The momentum of the armature ought to be sufficient to carry it by each break in the circuit.

that is being magnetized. Merely allow it to remain across the poles of the magnet for from ten seconds to one-half minute, this depending on the size of the parts being magnetized.

In using magnetizing coils without interruption, draw the steel towards you and away from the coils, raise in the air with a circular motion, coming behind the coils. Place the steel on the magnet poles, draw towards you and repeat the

Permanent and Electro Magnets.

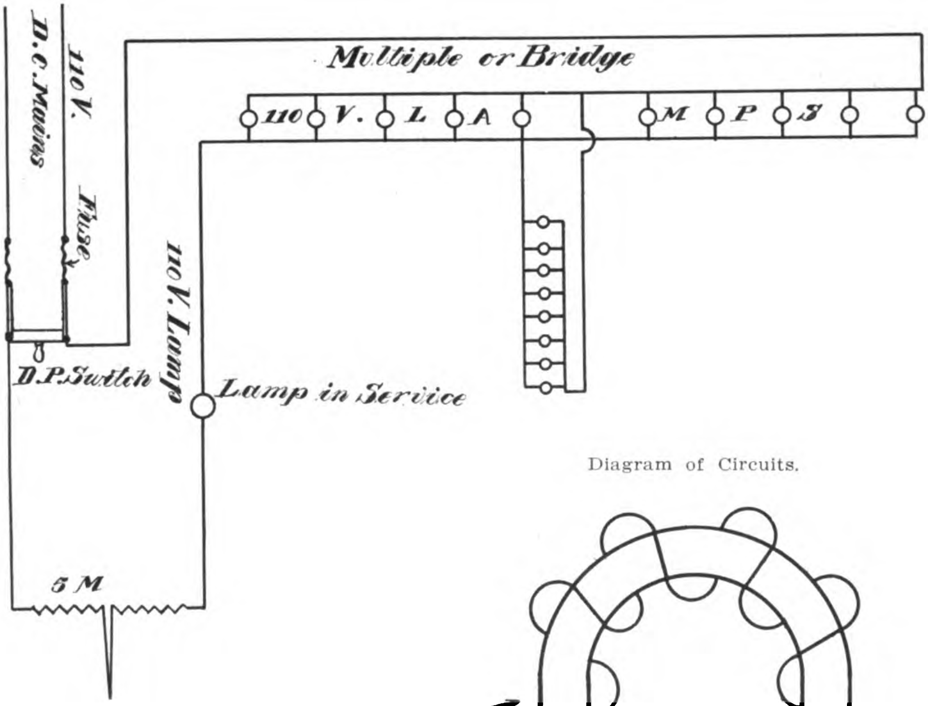

Diagram of Circuits.

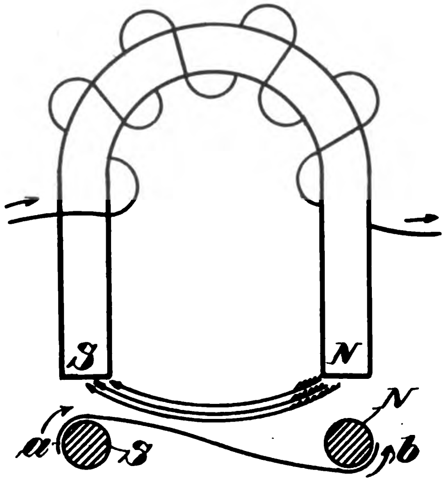

Diagram Showing Polarity.

At the points marked X — X the wire can be cut and an interrupter operated by an external source of current made to break and make the magnetizing current.

The lamp in series is for the purpose of allowing the current to pass through the coils, which are of low resistance without being short circuited. All lamps should be of the same voltage as the line. If the line is 220 v. use 220 v. lamps; if 110, use lamps of the same voltage. The candle power of the lamps is immaterial, except as regards the amount of watts consumed.

If an interrupter or motor is used, it is not necessary to pull away the metal

operation ten to twenty times. It varies with practice, depending on size, quality of metal, strength of current, magnetic intensity of coils, and purpose to which it is to be put.

Digitized by Google

The following laws are applicable to the above:

The force varies as the square of the current. The current will vary as the square root of the force exerted by it.

The diameter of core should at least be equal to the thickness of coil with which it is to be wound, thus making the outside of coil not more than three times the diameter of the core.

The force of attraction is proportional to the product to their magnetic strength or the force (P: m $\times$ m1) where m is the strength of one magnet and m1 that of the other or armature. If the strength of current now be doubled, then (assuming the iron to be far from the saturation point) the magnetic will be doubled; that is, 2 m $\times$ 2 m1 = 4 mm1, or doubling the current strength quarduples the magnetic attraction. Hence, this attraction at any given distance varies directly as the square of the strength of the current in the coil.

When, however, the iron approaches the saturation point, the alteration in its permeability prevents any definite law being formulated. Magnetic field strength varies inverselv as the square of the distance.

HOW TO DETERMINE THE POLARITY OF AN ELECTRO-MAGNET.

If the current flows in the direction a, of the hands of a watch, it is a south pole; when in the opposite direction, it is a north pole.

PERMANENT MAGNETS.

For the lifting power of magnets the rule is: Load = a x the square of the cube root of magnet's own weight. Here *a* is a coefficient depending on the composite quality of the magnet, its form and on the unit of weight chosen.

For horse-shoe magnets of best quality $a = 25$ if the weights are given in pounds, or $a = 20$ if in kilograms.

For bar magnets $a = 6\frac{1}{4}$, if the weights are in pounds; or 5 if in kilograms.

Short bar magnets should be made glass hard before magnetizing. Bar magnets that are as much as forty diameters in length and all horse-shoe magnets should be tempered down to a straw tint.

Magnets for use in magnetic measurements are required to be extremely constant in their properties, and should be prepared as follows:

Temper glass hard; then boil in water for at least six hours. When cold magnetize upon an electro-magnet, then boil for another hour and re-magnetize.

Never slam on the keeper of a horse-shoe magnet; slide it on. You can detach it as suddenly as you like, but you must not slam it on, or you will weaken the magnet.

An intelligent application of Ohm's law will solve any of the above in electro-magnetism or any variations of same.

RURAL TELEPHONE SERVICE.

WILLIAM GILBERT IRWIN.

The wonderful advances made during the last ten or twenty years along various lines in agriculture have to a large extent removed the farmer from his former isolated position, and to-day he is an important factor, not alone in supplying the world with the necessities of life, but also in the affairs of the world itself. It has not been so many years since the farmer was a factor all by himself, and, in fact, he had a little world of his own and did not largely enter into those matters which concern the towns and cities. Only when they felt hungry had the city dwellers any thoughts of the farmer, but times have changed, and the farmer to-day is a factor in nearly everything which concerns the prosperity of mankind.

The farmer of to-day is somewhat of a scientist. He thoroughly understands the mechanism of the complicated farm machinery which is in universal use, and in order to understand such machinery, he naturally becomes somewhat of a machinist. Through his knowledge of his land he obtains some knowledge of surveying, and in utilizing the streams of water he must know something about gravitation and hydraulics and other sciences. Perhaps the introduction of electricity into the various operations of agriculture has given the farmer the widest insight into mechanical science. This agent is now employed in various forms about the farm. It furnishes light, and from the same source is obtained the power for the operation of a large amount of farm machinery.

It is not the intention to discuss these subjects here, and the article will be confined to some of the advances made possible in farming through the introduction

Digitized by Google

of the telephone, the use of which has become quite general in many parts of the country.

In many of the states entire counties are now covered by systems of rural telephones, and in these counties nearly every farm is thus provided with communication with the outside world. While in some instances these telephone lines are controlled by the large telephone companies, many of these rural lines are owned and operated by local companies. Quite a number of the lines are owned by co-operative companies composed of the farmers who benefit by the service. This later plan has proved the most economical system of operation, and in this way the farmers of many sections are supplied with a good service at a cost as low as five dollars per year, and at the same time the farmers share any profits which may be made by the company. Through the operation of these co-operative telephone companies it is quite possible for the farmers of any section, except in the mountains which are sparsely settled, to secure the benefit of a telephone service at a cost not exceding fifteen dollars per year, and this outlay is well repaid by the benefits incurred by the telephone system.

In rural telephone lines a system is usually confined to one county, for the county-seat is generally the center of interest for the farmer, and communications with this and other towns of the county afford about all that the farmer could desire. Aside from securing communications with the towns of the county, the farmer also has communications with the neighboring farms. Through the service with the towns of the country he is able to keep in close touch with the markets and very often can dispose of his produce at a better figure than would be possible without the aid of the telephone. He is also kept posted in regard to the price of those products which he must buy, and thus is enabled to buy at the lowest prices. Very often it happens that some piece of farm machinery is needed on short notice, and in such case the telephone saves delay. The village hardwaremen may not have the desired piece of machinery in stock. The farmer telephones to him for it, and he in turn orders it from the city by telephone and has it ready when the farmer calls. This is only one of the many uses in which the telephone proves a money maker for the farmer. In case of sickness the doctor can be called quickly, should his early arrival be important, and if the farmer wants to know whether or not goods ordered have arrived at the railway station, he can readily ascertain the fact from the agent.

Another use for the telephone is in obtaining the weather forecasts. In those sections where rural lines are now in operation the farmers give close attention to this matter, and in many instances the information thus obtained saves them many dollars. These bulletins are now sent out from all the weather bureaus, and are regularly posted in all towns of consequence, and it is an easy matter for the farmers to obtain this information.

In northern Ohio there is a rural telephone system which has over six thousand subscribers, and similar systems with from five hundred to a thousand subscribers are now quite numerous. It is quite possible to organize a rural telephone system in almost any ordinary farming section, and while the rates for service can be made very low, yet the end of the first year will show a handsome profit. It is quite possible for the farmers to build and equip such a system at a much lower figure than can the large telephone companies. In the first place, there is no charge for right-of-ways, and then the poles, which are much smaller than in the big telephone lines, can be cut and erected by the farmers themselves. The main cost lies in the wires, for the instruments can now be secured at a reasonable figure. After the line has been installed the repair expense will be found to be quite light. Those farmers who now enjoy such are wondering how they managed to do without for so long, and under no consideration would they give it up. The time is fast coming when all progressive farming sections will have their telephone systems, and these will be in the hands of the farmers themselves.

York, Neb.—Articles of incorporation for the York Telephone Company have been filed with the secretary of state. The authorized capital stock is $50,000 and the incorporators J. N. Straight, E. A. Wells and C. N. Bladen.

Digitized by Google

NEEDED IMPROVEMENTS IN INDEPENDENT TELEPHONY.

By L. W. Stanton,
Superintendent of Equipment, Federal Telephone Co., Cleveland, Ohio.

Our several subjects are of vital importance to the independent telephone movement and it is only through the proper realization of those problems that the independent companies may hope to maintain the standing that this great independent movement has attained. Our competitor, the American Bell, has a well organized and disciplined force of employes, standardized apparatus of the highest type, and years of practical experience.

The independent telephone companies have popularized telephones and placed thousands of telephones in residences and places of business, undreamed of before the advent of independent telephony. They have achieved wonders and astounded the telephone world with the progress they have made during the comparatively brief period of time they have been in the field. They have yet their crucial period to meet.

There are three giant problems—Tariff, Traffic and Equipment—which are deserving of as much sound consideration as any problem in the industrial field today.

Public sentiment has been a very prominent factor in the independent field, but it is becoming more and more apparent that the company giving the best service and the most courteous treatment will secure the business.

The discriminating public have favored the home companies on account of their origin and the conditions under which they were brought into existence. This protection has extended over a number of years, but the time will arrive when the independent companies, even though they be owned locally, must demonstrate their ability to furnish as good or better service than their competitor. The writer is acquainted with several independent exchanges in which the service is inferior to that of the Bell Company, yet the public tolerate it, remembering the treatment they formerly received before the inauguration of the independent companies. This will not always exist. The public is prone to forget.

The company furnishing the best service to the greatest number at an equitable rate will, unquestionably, do the greater business. For the independent companies to bring about such conditions requires a far reaching revision in their present tariff system, a change in their engineering and equipment, and attention to details in traffic, the like of which they have never known before.

In our larger cities there are thousands of families and hundreds of small tradesmen that cannot afford to pay for flat rate individual service, neither can the telephone company, from a financial standpoint, afford to reduce its rate to meet these requirements. The inevitable result is party lines and measured service. I know a great many are opposed to this class of service, some for reasons which are valid, and some for reasons which are thought to be valid, but which are not. There has been a great deal of prejudice against the party line, owing to poor apparatus and inferior traffic arrangements.

A great deal has been due to public sentiment, which is unjust to the telephone company and unjust to the subscriber who cannot afford individual metallic service. By the use of the party line, thousands of subscribers can be served that could not otherwise afford individual service. With a good system of four-party line selective, with the traffic details well worked out, this service, for the small user, is almost as good as individual service. You say that it works an injustice to the subscriber who has individual service. It is quite the reverse. It is optional with him whether he will use the party line or not, but in ninety-nine cases out of a hundred he is glad to have a change to telephone to his party, even though it be over a party line.

Let us now look into the financial aspects of the party line. We will assume the exchange from which we draw our figures to be one of 4,000 lines, built at an average cost of $100 per line, and $25 extra for each additional party line 'phone, including the 'phone, interior wiring, line drops, etc. We will assume the rate for individual service to be $48 per year; $15 per year for operating individual party line 'phone. Figuring in-

Digitized by Google

terest at 5 per cent and depreciation at 10 per cent on the amount invested. We find by referring to the chart that upon doubling the number of 'phones on the line and decreasing the rate one-quarter, we decrease the net revenue per 'phone, and increase the net revenue per line. What is most noticeable is that the net per cent earned on investment per line is greater for both 2 and 4 party line than for either a greater or less number. A point that should not be lost sight of in establishing party line rates is that a dollar or two difference in the rate makes considerable difference in the net per cent earned on the amount invested, as is shown by the two rates on the 4 and 8 party lines. While the above table lays down no special rules to work by, it calls attention to facts that should not be lost sight of.

From the foregoing we see that the party line is a success from a financial standpoint, and a necessity from the view that the company serving the greatest number of people renders a service the more valuable, and will, therefore, secure the business if the service is kept up to the standard.

We will now look at the party line from a traffic and tariff standpoint, which is an exceedingly complexed problem. There are three principal objections to party lines:

First, the annoyance from the bells ringing when some one else is wanted; second, the frequent report of "line busy"; third, service is not private.

The first objection can be almost entirely eliminated on party lines of four or less, providing the equipment is of proper design and the operating is good.

The second is a more difficult problem. If there are two or more parties on the line, with unlimited service, the line will frequently test "busy." To remedy this, some form of measured service will be necessary. While it is admitted that measured service adds complications, it is undoubtedly the most equitable method of charging. While there are several forms of measured service, there are none that entirely fill the requirements. Automatic apparatus either at the 'phone or on the switchboard is not satisfactory, for in case the line called for should be busy, there would be a call registered without the party securing the service. With either a meter or slot machine placed at the 'phone it slows the service, for the operator must remain in on the line until the called for party is secured and the calling party has registered or deposited the required coin. This also works a hardship on the party called for, as it is necessary to wait until the party calling deposits the coin or registers. The system of measured service where a meter is used is also more expensive, inasmuch as it requires a visit to each 'phone to take the reading of the meter before a bill for service can be rendered.

The system in use in a number of the largest Bell exchanges and the one which gives the best general results, is where the operator marks down the number of the 'phone of the party calling, and in case the call is not completed, she draws a line through that number. Each hour these sheets containing the record of the calls are collected and sent to the billing department.

Measured service handled in this way gives the subscriber very prompt and efficient service. This class of measured service, used in connection with a four-party line, will give excellent results. Suppose you allow each party line subscriber 600 or 1,000 outgoing calls per year on a four-party line, or 1,200 to 1,800 on a two-party line, at a minimum charge, with a fixed rate per measure for all additional calls; all incoming calls free. Handled in this way the report, "line busy," will be no more frequent than it is with individual unlimited service; in fact, the calls will probably average less per four-party line than with unlimited individual lines.

In a peg count which the writer examined where there were nearly 5,000 party line 'phones, all of which were either measured or nickel service, the average call per day per 'phone was 1.3.

In regard to secrecy or privacy of a properly designed party line 'phone it is almost as private as an individual 'phone. With a lamp signal board and selective ringing the different parties on the line have no means of knowing when a party is calling or being called, and if a line is in use, they can readily hear another party come in on the line. With the three main objections just cited, handled

Digitized by Google

as above described, the party line gives a very desirable service and comes within the reach of a class of patrons or users that would otherwise be barred. From the foregoing it is plainly evident that the party line has a mission of importance to fulfill.

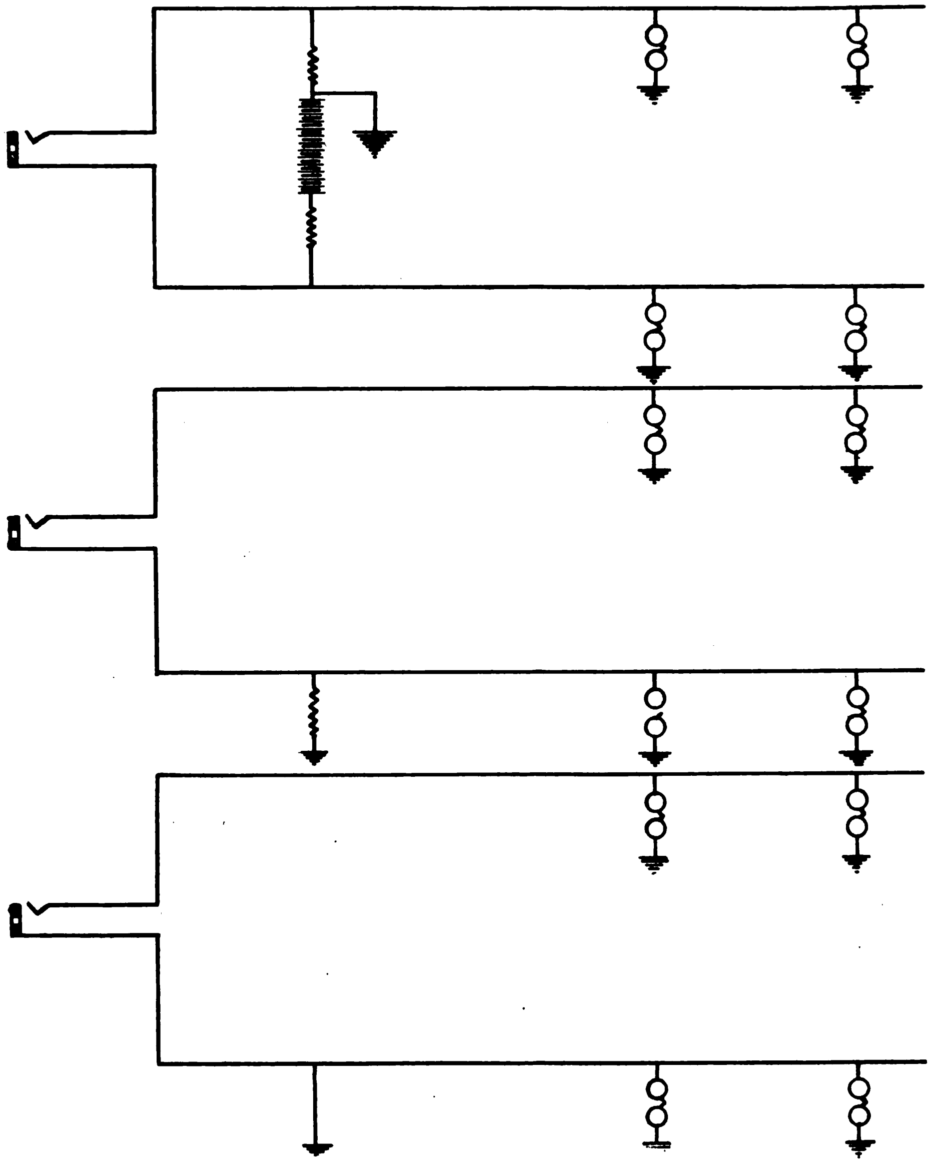

Diagram showing circuits of Party Lines.

Up to the present time the call for party line equipment has not been very great and the independent manufacturers who have done so well in furnishing equipment have not given this subject the attention that it should receive in the future. One of the leading manufacturers is just placing on the market a four-party selective system which depends upon the number of frequencies to operate the bells. From the limited experiments the writer has had an opportunity to make the system seems to possess valuable points over the pulsating bell type, which has been used by the Bell Company.

Before party line service can become

Digitized by Google

thoroughly commercial among the independent companies, the manufacturers will have to revise their design of equipment. The following diagram illustrates very plainly the line circuit of most of the manufacturers. From these we see that either one or both sides of the line are permanently tied to the central battery, which is grounded. This makes four-party selective signaling very difficult, if not impossible. While the independent companies are beginning to realize the value of the party line they need to equally realize the danger there is of very seriously impairing the efficiency of their present service. If inferior apparatus is used, or if the apparatus is not properly installed, or if the operating is not under proper discipline, the service will be such that the company will lose rather than gain by adopting party lines. One of the greatest needs of the independent telephone interests is either for this association or a kindred association to take up, in a technical way, the practical subjects of traffic engineering and equipment. There are thousands of dollars being wasted through ignorance, which could be avoided to a considerable extent by action on the part of such an association. If independent telephony is to be a real force in this country such an association must sooner or later be organized.

There is no progressive art in which the practical exponents do not get together and discuss the practical and technical problems which are sure to arise, and in such an industry as telephony it is particularly desirable, for in no other industry does the equipment and welfare of one company so intimately affect the other, being linked together as they are, or soon will be, by the vast network of long distance lines, to the end that one huge national system of intercommunication is established. With the millions there are invested and the opportunities there are open, it is a crime to the independent telephone interests that a little closer union and more uniform equipment is not adopted. The day for long distance telephony is just in its infancy, and for the independent companies to handle their share of the traffic and give the class of long distance service that will be demanded, they will be compelled to adopt a more standard form of equipment.

The writer's experience on the United States Telephone Company's long distance lines is that where 20 volt and 40 volt common battery systems, made by different manufacturers, are connected, the results are unsatisfactory. So much so in one case where a 40 volt system was installed, the former toll business at that place was almost lost for a period, owing to the inefficiency of the system for long distance work. Later a change was made that remedied the condition to some extent, but the system has never given the service it should. The trouble just cited was not due to the fact that it was a 40 volt system, which voltage is probably nearer correct, but due to the fact that the system was improperly designed for receiving incoming toll business.

The above well illustrates why telephone apparatus should be standard. From

COMPARATIVE DATA PARTY LINE SERVICE—6,000 LINE EXCHANGE.

No. of 'Phones per line.	Average cost per line.	Rental per line. per year	Cost to operate per line.	Interest on investment per line.	Depreciation 10% per line.	Total opt., int. and depres. per line.	Net earning per line.	Net earning per phone.	Net per cent earned on investment per line
1	$100	$48	$15	$ 5	$10	$ 30	$18	$18	$18
2	125	36-72	22.50	6.25	12.50	40.25	30.75	15.62	24
4	175	27-108	37.50	8.75	17.50	63.75	44.25	11.06	25
		24-96					32.25	8.03	18
8	275	20-160	67.50	13.75	27.50	108.75	51.25	6.41	18.6
		18-144					35.25	4.40	13

Digitized by Google

the output on the various independent manufactures there could be selected a line of high class apparatus that would be worthy of standardization.

Our competitor, the American Bell, has standardized apparatus, and the independents, until they adopt standard equipment, will necessarily give an inferior class of service.

If a traffic and engineering association were formed there are many subjects pertaining to engineering and traffic on which articles could be written and thoroughly discussed, which would be of inestimable value to the independent movement.

Any member attending such an organization for a so-called "good time," instead of a desire to contribute towards the material welfare of the body and the interests it represents, should be dropped from the association.

The problem of giving long distance service makes such an organization doubly necessary. If the independents expect to handle long distance business in an up-to-date manner, deriving the greatest amount of revenue from the capital invested, building their connections by ticket wire and leasing their wires to brokers and large corporations to use for telegraph, while the telephone company is using the same for telephone purposes, considerable forethought and sound engineering will be required.

If the long distance trunk lines are to be built by different companies they should consult each other, decide upon the class of construction and equipment, and, more important yet, the location of their relay or switching stations; I mean, locations along the trunk lines where testing for trouble is done, where operators are located for switching purposes, and where telegraph apparatus, such as relays, repeaters, Morse panels, batteries, etc., are located for handling leased wire work. The proper location of these switching stations is a very important matter. They should be located a certain distance apart to get the best results from the telephone apparatus. They should be located at junction points in the east and west and north and south trunk lines. The location is very important from three points of view. It is very important from a view of economically and properly handling the Morse or telegraph. It is important from the fact that the operators should be able to switch their messages to any point of the compass; and third, it saves the expense of building and maintaining additional switching stations. From the foregoing I am in hopes that the independent companies will realize the absolute necessity of an association to solve the problem that cannot be solved by each company working independently.

TELEPHONIC COMMUNICATION WITH FRANCE.

A convention drawn up by the British Postoffice has just been signed by the French Minister of Commerce providing for telephonic communication between London and some 300 of the larger industrial cities in France. Hitherto the telephone line to Paris has been almost exclusively used for Stock Exchange and Press messages, but with the new arrangement there is likely to be a large increase in the number of calls. A uniform charge of 8s for a three minutes' conversation, which is the present Paris rate, will be made, and the use of the system will be restricted to subscribers to the State telephones of both countries.—*London Electrical Engineer.*

BUSINESS CHANGES.

The following letter received from one of our oldest advertisers explains itself. The acquisition of such an important concern will be of much benefit to the large number of the Smith & Hemenway Company's customers:

New York, June 16, 1902.

To the Trade:—

We have this day sold our entire business to the Smith & Hemenway Co. of 296 Broadway, New York City, including contracts, patents, good will, machinery, tools and plants. We take this opportunity to thank you for your past patronage and wish for our successors a continuance of same.

Very truly yours,
The Yankee Company.

We have this day succeeded to the business of the Yankee Company, manufacturers of the Yankee Nail Puller, and hope to be merited with your continued favors and your valued orders.

Thanking you for your past favors and soliciting a liberal share of your future business in this line, we beg to remain,

Very truly yours,
Smith & Hemenway Co.,
Landon P. Smith, President.

Digitized by Google

LOUISIANA PURCHASE EXPOSITION

ELEC RICITY BUILDING.

The Electricity Building is now being constructed. The contract for it was awarded on March 8 to William Goldie Sons Company, the contract price being $399,940. The building was planned by Walker & Kimball of Boston and Omaha, who were chief architects of the Omaha Exposition. The structure will be located on the main central avenue and form one of the leading elements of the main exposition picture. It will have a frontage of 650 feet toward the north and 525 feet toward the east, facing the main lagoon.

The design is a bold columnated treatment of the Corinthian order. The columns are carried well down toward the ground, to give height to the facades. The facades will be well accentuated by elevated pediments and tower effects over the four main entrances and at the corners. Over the accentuated places, as well as over the twin columns, which form a pleasing variation of the treatment of the facades, opportunity for ample sculptural decoration is supplied.

The fenestration is bold and appropriate, giving ample light and substantial wall treatment. On two sides of the building are to be loggias which will add pleasing effects of light and shadow. There will be numerous openings on the facades, such as exhibitors always seek in selecting their exhibit space. The plan of the building is simple and well treated, showing an effect to supply as much exhibit space as is possible with the 292,000 square feet of floor space. The exhibit space is compact and symmetrical. An extensive balcony will sweep around four sides of the building, supplying 100,000 square feet of additional space.

A tremendous traveling crane, to be used in the installation of the big electrical machinery, which is to be shown in the building, will run on tracks in the western bay. Two big toilet rooms are to be located in the court of the building. The doors of the building will be of gigantic dimensions, 11 by 18 feet. The building will have 176 trusses, the largest span being 82 feet in length. One hundred and eighty-five tons of iron and steel will be used.

In the Electricity building the specifications provide for a temporary stairway to be put up of rough lumber and to be taken out before the completion of the building. The stairway is to lead to the roof. The object of this is to make the building a show place during construction so that visitors may ascend to the roof without the necessity of climbing ladders and crawling through scuttle holes and to make it possible for women to get a view from the same point to which men might ascend by ladders.

WHERE AND WHEN.

Would you advertise flannel in Egypt or Turkey?
Would you try to sell fans in Siberia so cold?
And wouldn't it hurt you on days damp and murky
To advertise slippers when gum boots are sold?
Would you run full page ads in the Klondike "Good Feeling,"
Advertising swell tailoring, and wouldn't it jar
You to take space in Dowie's famed Leaves of Healing"
To promote a good whiskey or fragrant cigar?
Would an A. P. A. ad be a very strong puller
In the Catholic Pilot?—and what would you think
If you read in the bartenders' "Fuller and Fuller"
Of a sure and infallible cure for Hard Drink?
There are places where people for some goods are yearning;
There are papers to use in promoting the sales;
But your time is well spent, advertisers, in learning
How the "foxy" man wins and the know-nothing fails.

—*Ad Sense for July.*

Cazenovia, N. Y.—The Cazenovia Telephone Company has been incorporated, with a capital of $1,000. The directors are Henry Burden, Jr., J. A. Boyster and M. R. Joy of Cazenovia.

* * *

Petersburg, Va.—A telephone exchange has been established at the town of Waverly, in Sussex county, by an independent local company, and it is designed to connect with the principal points and private houses throughout that section. It is probable also that connection will finally be made with the Mutual Telephone Company's exchange in this city, in order to give a wider field of communication.

Digitized by Google

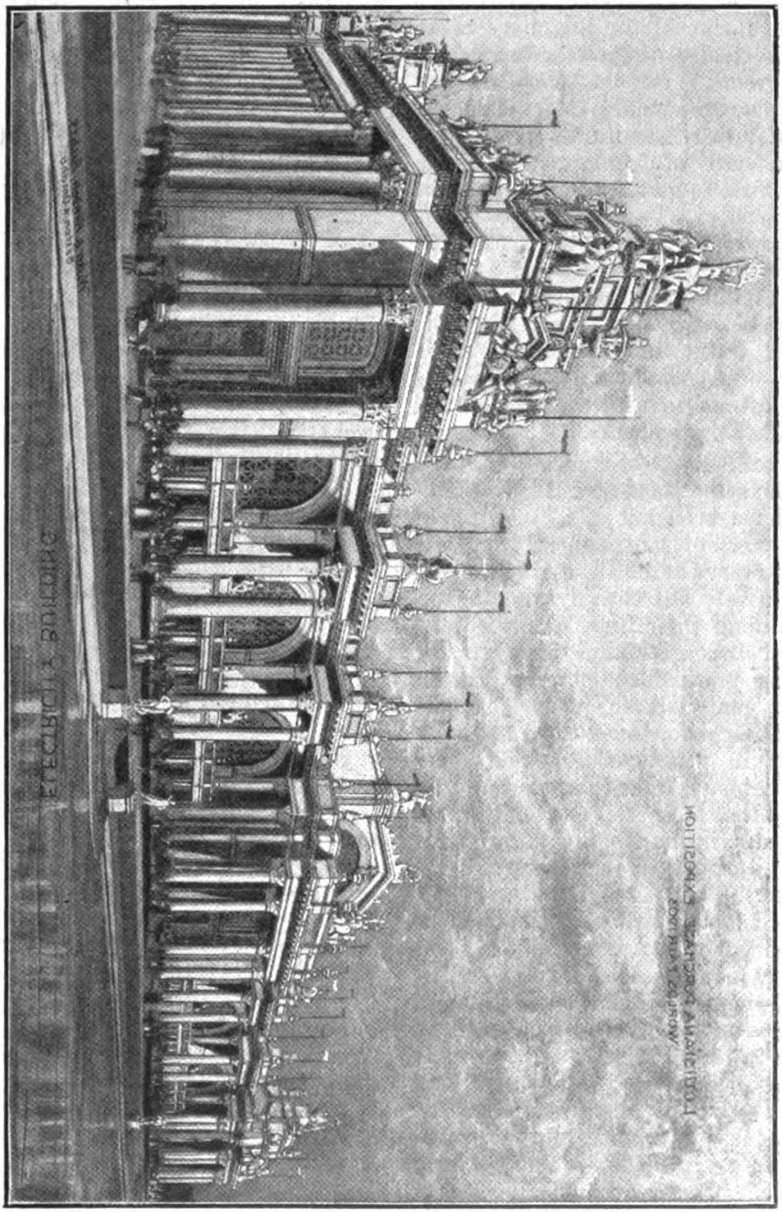

ELECTRICITY BUILDING—UNIVERSAL EXPOSITION, ST. LOUIS, 1904.

Digitized by Google

THE TELEPHONE SITUATION IN THE NORTHWEST.

By C. H. Judson.

Read by E. E. Webster, Minneapolis.

The independent telephone companies of the Northwest, particularly in the states east of the Rocky Mountains, have made tremendous strides in growth during the past two years. Of the Northwestern states, Wisconsin is older in independent business, naturally because of its proximity to the state of Illinois, which was among the first to go into the independent business heavily. The independents began operations in Minnesota as early as 1893, when two or three venturesome individuals established exchanges in towns lying at a considerable distance from the commercial center of the state. These exchanges were not in competition and were soon connected with the Bell system under traffic arrangements.

The entire Northwest has been the scene of the same peculiar business methods that have been adopted by irresponsible promoters of independent telephone companies everywhere. These gentlemen built extensively but cheaply and the inhabitants along their lines furnished the funds for their construction; but their day passed three years since, and they are to-day either gone forever or have become legitimate telephone operators, although principally in other fields. The independent telephone lines that are building to-day, and that have been built within the last two years, in the Northwest, are built by men who expect to own them and operate them. Their experience with the promoters demonstrated to them that the lines would pay and that by building better their money would be more secure. Many of them acquired the old lines in various ways and have reconstructed them, sometimes in their entirety, and in nearly every instance by changing the wires and making the circuits metallic, since the old money-making scheme of the promoters generally involved a very cheap grounded line.

The field in Minnesota and the two Dakotas has been a good one for the independents, since the Bell Company operating in these states owns a comparatively small number of exchanges, perhaps not to exceed sixteen in all. It was found that if a good independent exchange were built along the route of the Bell Company's long-distance lines that the Bell people were immediately anxious to secure connections with the new exchange. This, of course, helped to encourage the independents very greatly, and while the Bell Company has built no new exchanges in the states mentioned within the last five years, every town of five hundred or more inhabitants has a telephone system, some reaching to the important centers near them over independent lines exclusively, and some part of the way over independent lines and part of the way over the Bell lines. The policy of the Bell Company being to absorb the lion's share of the receipts, the arrangement has not been altogether satisfactory to the independents, and new toll lines have been constructed giving strictly independent connections with the largest independent exchanges from the outlying districts. Other lines are planned for construction during this and the coming season which will give the center of distribution, that is, the Twin Cities of St. Paul and Minneapolis, close connections with all points in the states of Minnesota and North and South Dakota, and will link the splendid system of the Wisconsin independents to it, making a Northwestern system amply capable of holding its end of the competition.

From the report of President Valentine of the Wisconsin Association I quote the following statistics as to the independents in that state:

Exchanges, 137; copper metallic toll lines, 200 miles; iron metallic toll lines, 3,000 miles; iron grounded toll lines, 4,000 miles; toll stations, 650; telephones in use, 23,000; invested capital, $2,316,875.

From the fact that the Minnesota Association has just been organized, it has been impossible to gather complete statistics regarding the business in that state, but from present information they are as follows:

Exchanges, 147; miles of long distance toll lines, 4,000; miles of circuit, 7,000, of which 1,150 miles are copper metallic; toll stations, 725; invested capital, about $3,300,000; telephones in use, 34,000.

South Dakota shows 103 exchanges, 2,350 miles of toll lines, 450 toll stations, and North Dakota 87 exchanges, 1,875

Digitized by Google

miles of toll lines, carrying 2,750 miles of circuits and 350 toll stations.

This showing is indicative of the enthusiasm which prevails in the Northwestern states regarding independent telephony. Since the Bell Telephone Company came into control of the Northwestern Telephone Exchange Company and the Wisconsin Telephone Company, their licensees in that territory, it has been endeavoring to tie up as many as possible of the independent exchanges under Bell license contract, by the terms of which the exchange company agrees irrevocably to sell to the Bell. Very few independent exchange companies have signed this contract. They hold the situation in their own hands, as the long-distance connections are of far greater importance to the Bell Company than to them; they are firmly maintaining their position and closing no contracts which will tie them to the Bell corporation. In the natural order of events the Bell Company will make extraordinary efforts to get hold of many of the larger independent systems, since, if they are cut off from them they will lose very valuable connections in future. Were the independents in a position to duplicate on short notice the six trunk lines running in various directions throughout the state of Minnesota and into the Dakotas, the Bell people would find themselves without feeders in almost the entire territory, so that it is very clear why they should make the most extraordinary efforts to tie the independent people to them. There is little danger as matters stand at present that such a consummation will come to pass unless inducements far out of the ordinary are made. In any event, however, the money received would probably be reinvested by the independent who sells out in an opposition plant, giving him in all probability a better exchange and toll-line system than he had before.

The largest independent company in the Northwest is the Twin City Telephone Company, operating exchanges in Minneapolis and St. Paul. This company entered the field in 1898 under the name of the Mississippi Valley Telephone Company. In 1901 the name was changed to the Twin City Telephone Company, and a new organization and ownership was effected.

The plants of the Twin City Telephone Company in the two cities are in active competition to the Bell people and are giving a quality of service which probably cannot be excelled in the country. The construction both aerial and underground is of the very best, the equipment is of the most up-to-date and efficient pattern and great care has been exercised to procure only the very best material and aparatus in all of the w rk.

A large portion of the work of both cities is underground, vitrified clay conduit being used exclusively, something like 1,000,000 feet of conduit being now in. The cable in use runs from 200 pairs down, built on the very best specifications, all being No. 19 B. & S. G. double wrap.

The pole lines of the Twin City Telephone Company are probably the handsomest to be found in the country, Idaho and Washington poles having been used for the most part and painted uniformly.

The plant of the Twin City Telephone Company comprises seven exchanges in the cities of Minneapolis and St. Paul, the company owning four of its own buildings, all having been constructed within a year, and each being built especially for the purpose in the most convenient and substantial manner. The extraordinary amount of territory covered by the Twin City Telephone Company renders the branch exchange system a clear necessity and the trunking service between the different exchanges has proven very satisfactory. The total ultimate capacity of the switchboards which are now installed is about 26,000 in the two cities. New switchboards will be installed next season adding five or six thousand ultimate.

The growth of the Twin City Telephone Company's business has been along the same lines as of all other independent companies and has even surpassed the expectations of those who are familiar with the demands which might be made upon them.

Nearly 7,000 telephones are now in operation in Minneapolis and St. Paul and orders are being taken and installed at the rate of over 500 per month. The Twin City Telephone Company installs no party lines, and it is therefore for the present cut off from doing business with a large number of the subscribers of the Bell Company who can afford to pay but little

Digitized by Google

for a telephone. This, however, has no effect on its earning power, nor upon its business prospects, since the telephone user who must get along with a telephone at a dollar and a half a month is of comparatively little importance in the business field. The company has installed a large number of private switchboard systems in the two cities and has been compelled to maintain a separate department for the installation and care of this particular branch of the work. The company has invested over $2,000,000 in the Twin Cities up to the present time.

The Zenith City Telephone Company of Duluth is the second largest independent telephone company in the state of Minnesota. It commenced construction in 1899, and at that time the Bell Company in Duluth had 700 subscribers. At the present time the Zenith City Telephone Company has about 1,900 subscribers in Duluth and it is unable to keep pace with the demand. Closely allied with the Zenith City Telephone Company is the People's Telephone Company of West Superior, Wis., which began business at the same time and has been as prosperous as the Zenith City Company.

These two companies are connected with the Twin City Telephone Company of Minneapolis and St. Paul by a long-distance line carrying three No. 10 copper circuits. This line belongs to the Consolidated Telephone & Telegraph Company, a corporation composed of officers of the Twin City Telephone Company. This connecting line is doing a good business and must have made some impression upon the American Telephone & Telegraph Company, which it parallels, since immediately upon the completion of the Consolidated line the A. T. & T. charge was cut from 75 cents between the Twin Cities and head of the lakes to 40 cents, the Consolidated Company having made its rate considerably lower than the old rate. The company is doing a very satisfactory business and has some twenty-eight stations on its line, which is about 150 miles long, the through business between the head of the lakes and the Twin Cities being especially good.

The Consolidated Telephone & Telegraph Company has material on the ground for the construction of a line between St. Paul and Eau Claire, connecting at that point with the Wisconsin system and running directly into the exchanges in Eau Claire, Menominee and Chippewa Falls, Wisconsin; also a line running southeast along the river to La Crosse, and connecting with the independent exchanges at La Crosse, Winona and intermediate points, perhaps thirty in all. This line will feed a large number of lines which have connections with the Twin Cities and will probably get 100 toll stations and 25 exchanges off of these lines. Nineteen hundred and three will see the Consolidated Telephone & Telegraph Company's lines extended southwest and west and northwest into the territory which is now connected with the Twin Cities only by Bell lines. These lines will be of the very best copper construction, since the Consolidated Company builds no iron lines except for the occasional accommodation of two or three small exchanges who wish connection among themselves here and there for local business only.

The United Telephone & Telegraph Company, with headquarters in Minneapolis, operates about 250 miles of line running southwest and south from St. Paul, with connections with the Twin City Telephone Company. These lines pass through three of the largest towns in which the Northwestern Telephone Exchange Company has exchanges, and in each one of these towns an independent exchange is doing a successful business. One of these cities—Mankato, Minn.—is rebuilding its entire plant this season, installing a new lamp signal switchboard, and putting in considerable underground construction. The Winona Telephone Company is also very successful, and the La Crosse Telephone Company is well known as one of the pioneers in the independent field and is doing remarkably well.

Perhaps the most successful independent in Wisconsin is the Madison Company. It is well known that in that vicinity the Bell Company does practically no local business and were the Wisconsin company well supplied with copper circuits running through the state and connecting up the various independent exchanges, there would be comparatively nothing for the Bell Company to subsist upon.

Digitized by Google

Farmers' lines in Minnesota are taking hold in good shape, one company having over 400 farmers connected with its lines and increasing its plant constantly. Parts of Wisconsin and Minnesota are as good farmers' line territory as can be found in the country, while other portions, of course, are so thinly settled that it will be some years before much progress can be made along this line.

At the meeting of the Minnesota independents held recently in Minneapolis, the constitution adopted contained an important clause and one worthy of mention at this time. It particularly provides for the elimination of poor construction and the building of toll lines and exchanges in the best possible manner, standardizing the work to the greatest possible degree. The independent owners in Minnesota have found that poor construction is not satisfactory from an investment standpoint and this agreement is certain to give the business in our territory a solid basis for future calculation and a standing among the independent systems of the country.

Portions of the Northwest demand telephone service because of the long distance between railroad stations and their inaccessibility at certain seasons of the year. In these districts it has been found difficult to make a good line pay at present, but the telephone has been found to be an active agent in the settlement and building up of a new country, and men of means and energy are at hand to furnish, next to transportation facilities, the most valuable adjunct to frontier and backwoods settlements. Fortunately many of these districts supply plenty of good cedar poles immediately at hand, making the construction to a degree cheaper than in the more settled districts. The telephone is so important to every class of business and to every kind of community that no one is willing to be without it, even the Indians on the reservations, among the more educated ones, find the telephone to be of some use to them, since the farmers among them have learned that if they have anything to sell, they are certain to get better prices where they can ascertain what the markets are at the centers of trade.

The general conclusion that I would have you draw is that the Northwest is not behind the Middle West nor the East in the pushing forward of the independent telephone movement. As the same sun shines on the man in Maine and the man in Oregon, and the same desire for the conveniences of life are experienced by both, so it is with the man in the large city and the man in the rural districts. The wheat growers in the rolling prairies of North Dakota, the miners in the cavernous hills of South Dakota, the lumbermen in the pine woods of northern Minnesota and the dairy farmers of central and southern Minnesota and Wisconsin, all need the telephone in their daily lives, and it is just as certain as anything human can be that every cross-road and every city and town will soon carry its copper network through these Northwestern states, linking their people together and bringing the Black Hills miners, the great wheat farmers, the lumbermen, the iron and copper men, the manufacturers and all the myriads of others whose lives and interests are mixed with theirs so closely together that it will be but the turning of a hand and the lifting of the receiver to talk on independent lines from the Falls of Minnehaha and St. Anthony to the Pictured Rocks and from the Black Hills and the bad lands to the shores of Lake Michigan and the rushing waters of the Sault Ste. Marie.

BELL COMPANY IN TROUBLE.

And a Reorganization Is in Prospect.

When the Detroit Telephone Company changed hands, a couple of years ago, Charles Flowers said the officers had been "sweating blood" and were glad to have the burden taken off their shoulders. This was done by selling out to the Michigan Telephone Company, and the task of "sweating blood" has since devolved on the officers of that concern.

While the Bell octopus triumphed over the opposition, it was a costly victory. Millions had been poured into this field, and from the day it acquired the Detroit and New State Companies the Michigan has been in serious financial difficulties. It was a millstone on the neck of its parent concern, the Erie system, and forced the latter into the hands of a Boston trust company, where it was hung up for months, unable to pay a debt of about $9,000,000.

Digitized by Google

The Erie System was finally reorganized under the name of the Western Telephone and Telegraph Company, which holds a majority of the Michigan Telephone Company's stock, but although construction work was temporarily abandoned in Michigan and efforts made to retrench expenses, the Michigan Company has still proved a heavy burden, and a crisis is now said to be at hand.

In a few months the company will probably be "reorganized," which means a heavy loss to the stockholders, if indeed many of them are not frozen out altogether. Information that such a move is pending comes to the Journal from parties who claim to be in close touch with the Michigan Telephone Company. One of these parties says he got his tip from a man holding a responsible position in that concern, and that he hasn't the slightest doubt of its reliability.

At the recent annual meeting no financial statement was made, and all stockholders who asked for information about the company's affairs got no satisfaction. The company's last dividend, 1¼ per cent quarterly, was paid a year ago last April, or about one year after absorbing the Detroit and New State Telephone Companies.—*Detroit Journal.*

BUYS INDEPENDENT LINES.

Bell Company Has Made a Purchase in East Part of State.

The Missouri and Kansas Telephone company, usually called the Bell Telephone Company, concluded at Kansas City Saturday two important transactions with Grant Hornaday and C. W. Penniman of Fort Scott, Kan., the men who were back of the projected independent telephone company building lines throughout the state.

The Bell Company bought outright the toll lines of the Kansas Telephone Company, which has 350 miles of wire from Fort Scott to Parsons, and covering a field in Missouri and Kansas of which those towns and Iola and Garnett, Kan., Rich Hill and Nevada, Mo., and Pittsburg and Girard, Kan., are the principal points.

The value of these toll lines, which Manager Alonzo Burt of the Missouri and Kansas Telephone Company stated were the best independent lines in Kansas, is about $40,000.

Mr. Duggan, local manager of the company, stated yesterday that he could neither deny nor affirm the rumor that the company had purchased the Wichita exchange, and was not at liberty to talk until the company's attorney, Mr. C. V. Ferguson, returned from Kansas City.—*Wichita (Kas.) Eagle.*

NEW INDIANA TELEPHONE COMPANY.

Brazil, Ind.—The Citizens' Telephone Company has been organized, with the following officers: President, John G. H. Klingler; secretary-treasurer, M. J. Murphy; vice president, T. U. Englehart; directors, H. D. Falls, T. U. Englehart, M. J. Murphy, S. M. Stigler and George Siegelin. The capital stock is $50,000. The company has leased the Winklepleck building on Main street for a period of ten years for its offices. Work of putting in the lines has begun, the American system being used. The company expects to expend $30,000 on the home plant; the remainder of the capital stock to be used in perfecting outside lines and long distance connections.—*Terre Haute (Ind.) Gazette.*

TELEPHONE RATES IN CANADA.

The Ottawa (Ont.) Citizen has collected interesting statistics on the telephone situation in Canada, giving the rates charged in many of the cities and towns and the number of instruments in operation. What prompted the Citizen to make the enquiry was the complaint of the people of Ottawa that the prices charged by the Bell Company were too high. They are $45 per year for offices and $30 for residences. Last January the voters expressed themselves in favor of installing a municipal telephone plant, and it is reckoned that first-class service can be supplied at $15 a year for business instruments and $10 for homes.

The figures collected by the Citizen show that the rates vary from $30 and $50 a year in Winnipeg to $10 a year for both residence and office service in Aylmer, Ont., where there are sixty telephones in use. There appears to be no uniformity of rates in towns of the same class or size. In Vancouver, British Co-

Digitized by Google

lumbia, the rate is $36 for both business and residence and 1,300 telephones are in use, while Winnipeg has 1,600 and the prices charged are $50 and $30. Toronto has 7,000 telephones at $45 and $25. St. Catharines people pay $35 and $25.

Within the past few months the representative of an independent company in the United States offered to cover the Province of Ontario with a telephone system and guarantee first-class service in all the cities for $15 and $10 a year. But Canadians are evidently waiting until a public telephone plant can be installed to avoid the necessity of having two systems. —*Buffalo (N. Y.) Enquirer.*

COMPLETE EXPOSITION OF THH TELEPHONE ART COVERED BY UNITED STATES PATENTS.

The American Patents Publishing Company for whom Mr. Jas. T. Allen, examiner of the United States Patent Office, is the compiler, announces that they intend to issue a complete digest of all United States patents for telephones from 1789 to Jan. 1, 1902, provided a sufficient number of subscriptions can be received for the same within a reasonable time to warrant its production.

This publication will be in two volumns of about 2,500 pages, and will include approximately 5,000 patents, together with reissued designs and trademarks.

Said patents, etc., will be chronologically arranged under 30 or more sub-classes, and alphabetically indexed.

The drawings of each patent will be reproduced in full, showing each and every sheet and figure.

The claims will also be reproduced in full accompanied by brief description of the invention, sufficient to interpret the full meaning of the claims.

The alphabetical index will carry with it a complete list of the references cited (giving number, name and date) against each patent while its application was pending in the patent office, giving also the interferences and decisions.

In the Official Gazette, the organ of the United States Patent Office, usually but a single figure of the drawings is given for the purpose of illustrating that part of the invention on which the claims are based, consequently it is of but little value to those who desire all the information concerning the patents noticed therein.

Therefore the user of the telephone digest can in a few minutes examine any telephone divide from all sides, thus obtaining a grasp of the character, purposes and scope of the patent and construction to be obtained in no other way.

Believing that all manufacturers of telephones and telephone parts and accessories, exchanges and inventor are interested in such a valuable source of information, THE TELELPHONE MAGAZINE heartily endorses the proposed publication feeling that it will be of inestimable value to all concerned in the origination, manufacture and sale of telephones and telephone supplies, and invites correspondence from its readers with a view of furnishing further information.

TELEPHONE NEWS.

Red Oaks, Ia.—Montgomery County Telephone Company. Capital, $50,000.

* * *

Elden, Neb.—Eldon Independent Telephone Company of Eldon; capital, $25,-000; J. B. Eddy, president; C. R. Eddy, secretary.

* * *

Lost Nation, Ia.—Lost Nation Telephone Company; capital, $5,000; Albert Daniel, president; W. C. Hohn, vice-president; L. Rutenbeck, secretary; Tim Appleton, treasurer.

* * *

Trowbridge, Ill.—Trowbridge Mutual Telephone Company, Trowbridge; $1,-500; operating a telephone system. Incorporators, Henry C. McClory, John C. Quinn, Bernard Wilson.

* * *

Sioux City, Ia.—Articles of incorporation for the Arlington Telephone Company of Moville have been filed in the office of the county recorder. The company will have a capitalization of $5,000, divided in 50 shares of $100 each. The company is to build a telephone system to operate in Iowa. The incorporators are W. L. Sanborn, who is president; M. E. Southwick, secretary; W. W. McElrath, treasurer, and W. H. Maxfield, John P. Dunning and S. E. Sibley.

Digitized by Google

Dexter, Ia.—Mutual Telephone Companyq of Dexter; capital, $5,000; W. W. Brown, S. F. Lenacker, E. B. Yaple and J. M. Goodson, incorporators.

* * *

Emporia, Kan.—Frank L. Brown, clerk of the Supreme Court at Topeka, has bought a controlling interest in the Emporia Telephone Company. Mr. Brown has a controlling interest in most of the independent telephone companies in the southern part of the state.

* * *

Muscatine, Ia.—Muscatine Central Telephone Company, of Muscatine; capital, $10,000; Wm. C. Haley, Wm. P. Hitchcock, Otting Houseman and others, directors.

* * *

Stanhope, Ia.—Stanhope-Jewell Interurban Telephone Company of Stanhope. Capital. $1,000.

* * *

Lexington, Ky.—Two new independent telephone companies have been incorporated in Delaware by Kentucky capitalists to be operated in this state. One company will put in a new exchange at Paris and the other at Nicholasville. Desha Breckinridge, president of the Lexington Home Company, is interested in them and they will likely be the means of furnishing long-distance connections for the company here.

* * *

Frankfort, Ky.—Amended articles of incorporation have been filed in the office of the secretary of state by the Cynthiana Telephone Company, of Harrison county. It increases the amount of its capital stock from $30,000 to $40,000.

* * *

Beatrice, Neb.—The city council has passed an ordinance granting a twenty-year franchise to the R. V. Montague Investment Company of Kansas City, Mo., to operate an independent telephone company in the city.

* * *

Waurieka, Okla.—The Farmers' & Merchants' Telephone Company of Waurieka, for a period of twenty years and with $10,000 capital stock. The incorporators are J. M. Bellamy, president; G. W. Davis, secretary; A. X. Campbell, treasurer; C. B. Bellamy, vice-president and general manager.

Waxahachie, Tex.—Ellis County Independent Telephone Company, of Waxahachie; capital stock, $100,000; incorporated by A. E. Shaffer, J. B. Earle and Tony Shaffer.

* * *

Pecan Gap, Tex.—North Texas Telephone Company of Pecan Gap, Delta county, capital stock $5,000. The incorporators are W. A. Cockrell, W. R. James and J. H. Gordon.

* * *

Ballinger, Tex.—The Central Texas Telephone Company of Ballinger has filed an amendment to its charter, increasing its capital stock from $50,000 to $75,000.

* * *

Nashville, Ill.—The Southern Union Telephone Company are to make extensions throughout Washington county. Lines will be run to Venedy, Stone Church and Johannesburg. Farmers along the line will be given an opportunity to have 'phones placed in their residences. Another line will also be extended south from Nashville, ultimately connecting with Pinckneyville.

* * *

Litchfield, Ill.—The People's Mutual Telephone Company, Litchfield, has been incorporated; capital, $5,000; operating a telephone system; incorporators, G. W. Rainery, J. R. Paisley, Stephen D. Canady.

* * *

Denison, Ia.—The Crawford County Telephone Company has been incorporated at Denison; J. B. Romans, president; J. F. Glenn, secretary.

* * *

Doon, Neb.—The Doon Mutual Telephone Company of Doon has been incorporated; C. Ross, president; Herman Hasche, secretary.

* * *

Ulysses, Neb.—The Ulysses Independent Telephone Company has incorporated, with a capital stock of $5,000. The following officers have been elected: President, Henry Diers; vice-president, O. J. Schmitt; secretary, S. Roberts; treasurer, George Dobson. Work on the system will begin at once and as soon as completed connection will be made with long-distance lines.

Digitized by Google

125

K. of P.

Knowledge of Plyers

That's what every lineman and mechanic has. So should you. If you read the Green Book of Hardware Specialties you will gain it. It tells of plyers, of all kinds, for all purposes. There are no better made. You need not look further. They are well worth a trial. Give them one and be convinced.

THE SMITH & HEMENWAY CO. CORP.
Manufacturers of
Cutlery and Hardware Specialties.
Ask your dealer for these goods.

Utica Drop Forge & Tool Co.
Manufacturers of
NIPPERS AND PLYERS
296 Broadway, - - New York City

AN ERICSSON ?

YES, AND IT IS "STANDARD OF THE WORLD"

Switchboards of all sizes; telephones for all uses and full exchange equipment. We help new companies to start right and old exchanges to improve.
We can interest you. Write for particulars.

ERICSSON TELEPHONE CO., 296 Broadway, NEW YORK CITY.

MENOMINEE

Electric.....

Manufacturing Company
MENOMINEE, MICH.
Manufacturer of
High Grade Magneto Bells for Series and Bridged Work.

A careful study of the requirements of the independent telephone field, together with long experience in the manufacture of electrical apparatus, enables us to offer a very superior instrument containing all the qualities that combine to effect the highest degree of efficiency at prices commensurate with the extraordinary quality of our produce

OUR MOTTO IS
The Best Equipment.
To the Best People.
At the Best Price.
Gives the Best Results.

FAN MOTORS - - FAN MOTORS
Unequaled for Telephone Booths, Offices, Factories and Residences.

A RÉSUMÉ

of the telephone situation as to changes and new exchanges, improvements in telephone apparatus and all the news of the telephone field appears weekly in the

Electrical Review

Also timely articles by recognized telephone authorities on all branches of telephony.

Subscription, $3 a year.

Western Office, - Marquette Building, CHICAGO.
Publication Office, - 13-21 Park Row, NEW YORK.

Digitized by Google

IF YOU DON'T KNOW SOLARINE YOU OUGHT TO!

SEND FOR FREE SAMPLE TO

SOLARINE COMPANY

80 MARKET STREET...CHICAGO, U. S. A.

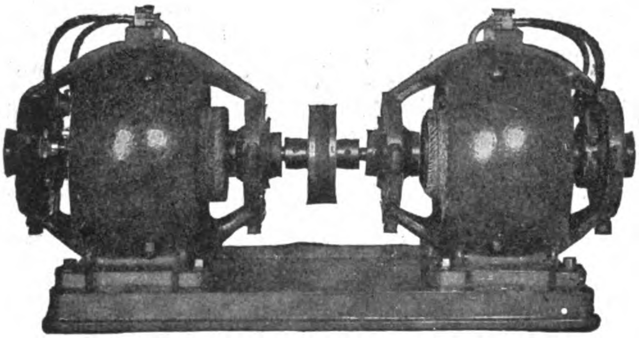

TWIN CHARGING MOTOR-GENERATORS

TELEPHONE POWER APPARATUS OF EVERY DESCRIPTION

Our Line will fill all your wants

Charging Outfits
Ringing Generators
Special Telephone Power Apparatus
Send for Bulletin No. 147

ROTH BROS. & CO.

88-92 W. Jackson St., CHICAGO, ILL.

The American Electric and Automobile Patents Monthly

INCLUDING ALL PATENTS FOR TELEPHONES

The publication to contain each and every sheet and figure of the drawings of the telephone patents, the claims in full, a short description of the invention, also a complete list of the references cited while the applications were pending, *interferences, parties thereto and the decisions, also reissues, designs and trademarks pertaining thereto.* . . . .

SUBSCRIPTION PRICES

Including the *Telephone Magazine* Published Monthly

United States and Canada . . $5.00 per annum, in advance
Foreign Countries . . . . . 7.50 per annum, in advance

ADDRESS

Telephone Magazine Medinah Temple Chicago, U. S. A.

Digitized by Google

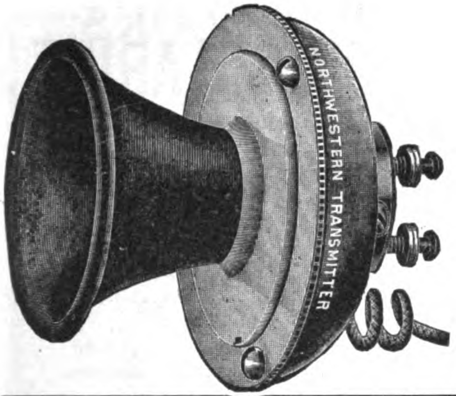

NORTHWESTERN TELEPHONE MANUFACTURING CO.

We make Telephones for the Wholesale and Supply Trade

ANY STYLE, AND PARTS FOR ALL TELEPHONES.
WORKMANSHIP GUARANTEED.
SEND FOR PRICES.

Address 191 to 193 S. Canal St., CHICAGO.

PAY Stations that PAY

This is the Station Adopted by the

KEYSTONE TELEPHONE CO., Philadelphia, Pa.

Our Stations are used by the Exchanges in

Baltimore.
Pittsburg, Pa.
Indianapolis, Ind.
Syracuse, N. Y.
Columbus, O.
Saginaw, Mich.
Denver, Colo. (Bell)
Memphis, Tenn. (Bell)
Philadelphia, Pa.
Cleveland, O.
Rochester, N. Y.
Grand Rapids, Mich.
Savannah, Ga.
Salt Lake, Utah (Bell)
Kansas City, Mo. (Bell)
New Orleans, La. (Bell)

Every Large Independent Exchange in this Country now using Pay Stations use our make. This is significant. They get the BEST.

The AMERICAN TOLL TELEPHONE CO.

40 to 50 Sheriff St., CLEVELAND, O.

Bound Volumes

Vol. XVII. January-June 1901
Vol. XVIII. July-December 1901

OF THE

Telephone Magazine

NOW READY

Substantially bound in Muslin with Gilt Title, will be sent, postpaid, for $1.50 to any address.

Telephone Magazine
Medinah Temple, Chicago, U. S. A.

A LIBRARY OF TELEPHONE LITERATURE

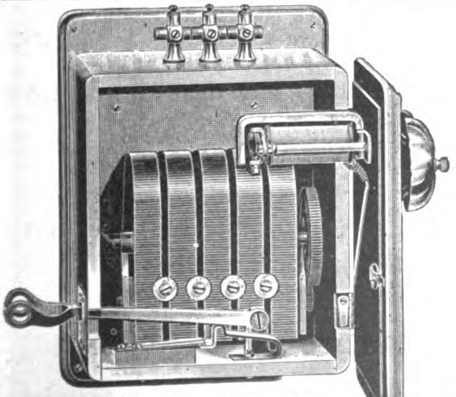

Victor Samson Bridging Bell.
Most powerful ever produced.

THE

Victor Telephone Works

203-207 So. Canal St., CHICAGO, ILL., U. S. A.

EVERYTHING IN TELEPHONES AND SWITCHBOARDS

Thoroughly Practical, Nothing Experimental, and No Guesswork.

Get our prices before placing your order. We guarantee our apparatus to be electrically correct and mechanically perfect.

Digitized by Google

TELEPHONE AND KINDRED BOOKS.

THE INSPECTOR AND TROUBLE MAN. By A. E. Dobbs.
A complete volume on telephone faults and exchange construction. 110 pages, 67 illustrations $1.00

TELEPHONES; THEIR CONSTRUCTIONS AND FITTING. By F. C. Allsop.
A practical treatise on the fitting up and maintenance of telephones and the auxiliary apparatus. 208 illustrations and folding plates. Third edition, 12mo, cloth 1.25

PRACTICAL FEATURES OF TELEPHONE WORK. By A. E. Dobbs.
This volume is on telephone construction, and should be of great value to every telephone man. 135 pages, 65 illustrations .... .75

SMALL ACCUMULATORS. By Percival Marshall.
As storage batteries are being used in the telephone exchanges, all telephone men should be familiar with their construction and working. This volume will be found to be complete to every telephone student. 80 pages, 23 illustrations .... .50

THE GALVANOMETER AND ITS USES. By C. H. Haskins.
A manual for electricians and students. Fourth edition, revised. 12mo, morocco; illustrated 1.50

INDUCTION COILS. By G. E. Bonney.
A practical manual for amateur coilmakers. 101 illustrations, 12mo, cloth 1.00

ELECTRIC TELEPHONY. By E. J. Houston and A. E. Kennelly.
Elementary Electro-Technical Series. 16mo, cloth; illustrated 1.00

ELECTRIC INSTRUMENT MAKING FOR AMATEURS. By S. R. Bottone.
A practical handbook, with 48 illustrations. Fourth edition. Enlarged by a chapter on The Telephone. 12mo, cloth .... .50

TELEPHONE INSPECTOR'S HANDBOOK. By W. H. Hyde and J. H. McManman.
Telephone Troubles and How to Find Them. 64 pages. Many illustrations. The only book enabling telephone men to instantly overcome telephone troubles .... .25

PATENTED TELEPHONY.
102 pages; illustrated. A review of patents pertaining to telephones and telephonic apparatus, describing fully the more impo tant details 1.50

THE TELEPHONE. By William J. Hopkins.
Outline of the development of Transmitters and Receivers. 12mo, cloth, New York: 1898, 1.00

THE MAGNETO HAND TELEPHONE. By Norman Hughes.
Its Construction, Fitting Up and Adaptability to Everyday Use. 12mo, cloth 1.00

TELEPHONE HAND BOOK. By Herbert Law Webb.
12mo, cloth. 133 illustrations. Chicago: 1900 .... 1.00

PRACTICAL ELECTRICS.
This volume could rightly be called an electric encyclopedia. It contains information on everything pertaining to electrical matters. 135 pages, 126 illustrations .... .75

SYSTEMATIC TREATISE ON ELECTRICAL MEASUREMENTS. By H. C. Parker.
Treats more particularly of methods used in laboratory, telegraph and cable testing. 120 pages, 100 illustrations, cloth 1.00

PRACTICAL TELEPHONY. By J. Bell and S. Wilson.
Adapted to Requirements of City and Guilds of London Institute. 8vo, limp cloth. London: 1898 .... 1.00

THE TELEPHONING OF GREAT CITIES AND AN ELECTRICAL PARCEL EXCHANGE SYSTEM. By A. R. Bennett.
Two papers read before the British Association at Cardiff. Revised edition. Numerous diagrams. Paper .... .35

THE TELEPHONE SYSTEM OF THE CONTINENT OF EUROPE. By A. R. Bennett.
With 169 illustrations. 8vo, cloth 4.50

AMERICAN TELEPHONE PRACTICE. By Kempster B. Miller.
518 large octavo pages. 379 illustrations. This book treats of the subject in a simple and comprehensive manner from the practical standpoint, and almost entirely without the use of mathematics. All matters of principle and practice are clearly and fully considered, enabling the reader to obtain an understanding, not only of the rudiments of telephony, but also of the most intricate circuits of modern exchanges 3.30

WILL SEND ANY ELECTRICAL BOOK PUBLISHED ON RECEIPT OF PRICE, POST PREPAID.

ADDRESS

Telephone Magazine - **MEDINAH TEMPLE, CHICAGO, U. S. A.**

Digitized by Google

Four Party Line

SELECTIVE SIGNAL TELEPHONES

......FOR.....

Central Energy Systems

ANTICIPATING THE PRESENT GREAT DEMAND FOR TWO AND FOUR PARTY SELECTIVE SIGNALING TELEPHONES FOR USE IN CONNECTION WITH COMMON BATTERY OR CENTRAL ENERGY SWITCHBOARDS, THE AMERICAN ELECTRIC TELEPHONE COMPANY SECURED CONTROL OF VALUABLE PATENTS PERTAINING TO SELECTIVE SIGNALING APPARATUS.

PRIOR TO THE AMERICAN COMPANY SECURING THEIR PATENTS, SELECTIVE SIGNALING SERVICE FOR CENTRAL ENERGY WORK WAS, AT ITS BEST, A VERY UNSATISFACTORY PROPOSITION. IN THE WELL-KNOWN SYSTEMS OF SELECTIVE SIGNALING APPARATUS, THE USUAL PRACTICE IS TO USE TELEPHONES IN WHICH THE SIGNAL BELL IS SELECTIVELY POLARIZED—THAT IS TO SAY, THE SIGNAL BELL IS SO ARRANGED THAT IT WILL RESPOND ONLY TO CURRENTS PASSING THROUGH IT IN A CERTAIN DIRECTION, EITHER PLUS OR MINUS, DEPENDING UPON WHETHER THE BELL IS ARRANGED TO OPERATE WHEN A CURRENT IN A MINUS OR PLUS DIRECTION IS SENT THROUGH IT.

HAVING EXPERIENCED ALL OF THE ABOVE DIFFICULTIES AND PRACTICALLY ABANDONED FOUR-PARTY LINE SELECTIVE WORK, THE AMERICAN ELECTRIC TELEPHONE COMPANY OBTAINED CONTROL OF THE LEICH SELECTIVE SIGNALING PATENTS. THIS SYSTEM OVERCAME EVERY ONE OF THE OBJECTIONS PREVIOUSLY PRESENT IN THE SELECTIVELY POLARIZED SYSTEM.

SEE OUR NEW SELECTIVE PARTY LINE SYSTEM

FOR FARMERS' LINES—A LARGER NUMBER CAN BE USED ON ONE LINE AND HAVE PRIVATE COMMUNICATION AND SELECTIVE RINGER.

SOMETHING NEW. FOR PARTY LINES.

ANY NUMBER OF TELEPHONES CAN BE USED ON A METALLIC LINE. — PERFECTLY SELECTIVE RINGING AND TALKING.

SEND FOR CIRCULAR AND PRICES.

American Electric Telephone Co.

36 to 58 West Jackson Boulevard, Chicago, U. S. A.

Two Dollars

FOR A NAME

We want your dealer's name, (Stationer, Jeweler or Druggist) and as an inducement for you to send it to us, we will send postpaid, your choice of these popular styles

Laughlin Fountain Pen

Superior to the $3.00 grades of other makes, for the name and only

$1.00

BY REGISTERED MAIL 8C EXTRA.

If you do not find the pen as represented, and superior in every respect to any pen you ever used, return it and get your $1.00 back as the pen is

SENT ON APPROVAL

TO RESPONSIBLE PEOPLE

It Costs You Nothing

to try it a week. Safety Pocket Pen Holder sent with each pen

FREE OF CHARGE

Do not miss this opportunity to secure a $3 value at a price that is only a fraction of its real worth. Finest grade 14 Karat Gold Pen, and guaranteed. Everybody knows that in Fountain Pens the

Laughlin

has no equal, and is always sold under the express conditions that if not entirely satisfactory, your money refunded. Address

Laughlin Mfg. Co.
653 Griswold Street,
DETROIT, - MICHIGAN.

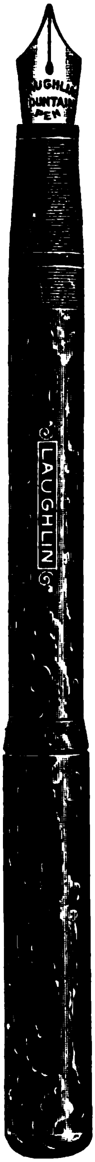

McGill Building,
Washington, D. C.

Having severed my official connection with certain manufacturing interests, I beg to announce that I have resumed independent practice as Attorney and Counsellor in Patent Causes.

I offer my associates and clients the benefit of several years' experience in connection with Laboratory and Engineering work, and the perfecting and manufacture of Electrical Inventions, as well as a previous service of seven years as a member of the Examining Corps, in the Electrical Division, U. S. Patent Office.

EDWARD E. CLEMENT.

April 7, 1902.

HAVE YOU RENEWED YOUR SUBSCRIPTION?

Prices for the erection of a modern telephone exchange at Yankton, S. D., solicited. Address

YANKTON TELEPHONE CO.,
Yankton, S. Dak.

BINDERS

For preserving your Copies of

Telephone Magazine

Will be sent postpaid for

50 cents in stamps.

STRONG, SIMPLE, DURABLE.

Will hold six months' or a year's numbers.

SEND FOR ONE.

Telephone Magazine

Medinah Temple, Chicago, U. S. A.

Digitized by Google

Specify the "Chloride Accumulator"
for Telephone Work.

THE ELECTRIC STORAGE BATTERY CO.

PHILADELPHIA

PHILADELPHIA Allegheny Ave. & 19th St. NEW YORK 100 Broadway BOSTON 60 State St. CHICAGO Marquette Bldg. BALTIMORE Continental Trust Bldg.
ST. LOUIS Wainright Bldg. CLEVELAND New England Bldg. SAN FRANCISCO Nevada Block DETROIT Michigan Elect. Co. HAVANA, CUBA G. F. Greenwood, 24 Empedrado St.

SPEER CARBON COMPANY

Manufacturer of

CARBON BACKS AND SPECIALTIES FOR TELEPHONES—ALSO LIGHTNING ARRESTER CARBONS OF EVERY DESCRIPTION .....

ST. MARYS, PA.

Why you should Advertise in the

AMERICAN TELEPHONE JOURNAL

BECAUSE

1. It is not a house organ.
2. No one connected with manufacturing, jobbing, selling or operating has a dollar's interest in it. It therefore does not "play favorites" and is fair to all.
3. It publishes more telephone literature and news than all of the telephone and electrical papers of the world combined.
4. It spares no expense to procure latest and best matter that is of interest to the operator, whether he be a farmer or the chief officer or engineer of a million dollar company.
5. Its paid subscription is greater than the combined paid subscriptions of all telephone papers and telephone subscriptions of all electrical papers.

The AMERICAN TELEPHONE JOURNAL

CHICAGO: 518 Monadnock Block. NEW YORK: 116 Nassau Street

MANUFACTURERS.

Ringer Movements, Telephone Cords,
Induction Coils, Magnet Wire.

THE McDERMID MFG. CO.,
118 W. Jackson Blvd., CHICAGO, ILL.

Gordon Cells Extensively Used by

Leading Telephone Companies and Manufacturers

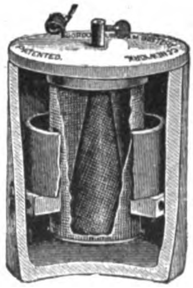

Guaranteed Long Life and Efficiency

Ask for Catalog and Discounts

Gordon Battery Co.
439-445 E. 144th Street NEW YORK

A POPULAR SCIENTIFIC WEEKLY JOURNAL

ELECTRICITY AND ELECTRICAL ENGINEERING

The Most Successful Medium for Advertising
in the United Kingdom

WRITE FOR SAMPLE COPY AND ADVERTISING RATES

2 EXETER ST. STRAND LONDON, ENGLAND

ELECTRICAL ENGINEERING PUBLISHING CO., Marquette Building, Chicago, Ill.

Please mention TELEPHONE MAGAZINE in writing to advertisers.

Digitized by Google

INDEX TO ADVERTISEMENTS.

	PAGE
American Battery Co.—Storage Cells	V
American Electric and Automobile Patents—Publication	XII
American Electric Telephone Co.—Telephone Apparatus	IV
American Telephone Journal	XVII
American Electric Telephone Co.—Transmitters	XX
American Electric Telephone Co.—Telephones	III-XV
American Electric Telephone Co.—Selective Signal Telephones	XV
American Electric Telephone Co.—Glass Insulators	VI
American Toll Telephone Co.—Pay Stations	XIII
Bulkley, Chas. C.—Patent Lawyer	X
Central Manufacturing Co.—Announcement	X
Colt, Henry A	X
Conley Foil Company—Tin Foil	X
Clement, Edward E.—Announcement	XVI
Electrical Review	XI
Electric Storage Battery Co.—Accumulators	XVII
Electricity (London)—Newspaper	XVII
Ericsson Telephone Co.—Microphones	XI
For Sale	XVII
Gordon Battery Co.—Batteries	XVII
International Correspondence Schools	XVI
Keystone Electric Telephone Mfg. Co.—Telephones	VI
King, P. S. & Son	XVIII
Klein, Mathias & Son	X
Laughlin Mfg. Co. -Fountain Pens	XVI
Menominee Electric Mfg. Co.—Magnets	XI
McDermid Mfg. Co.—Magnet Wire	XVII
National Carbon Co.—Batteries	V
New York Insulated Wire Co.—Rubber-covered Wires and Cables	X
Northwestern Tel. Mfg. Co.—Telephones	XIII
Nungesser Electric Battery Co.—Batteries	III
Okonite Co., Ltd	X
Plume & Atwood Mfg. Co.-Brass, Copper and German Silver	X
Roth Bros. & Co.—Power Apparatus	XII
Royal Trust Company	X
Situations Wanted	
Smith & Hemenway	XI
Solarine Company—Solarine	XII
Special Offer	
Standard Underground Cable Co	X
Speer Carbon Co.—Carbon Specialties	XVII
Telephone Magazine—Binders	XIV
Telephone Magazine—Bound Volumes	XIII
Telephone Magazine—Books	XVI
Telephone Magazine—Diploma	IX
Telephone Magazine	VII
Victor Telephone Works-Telephones	XIII
Western Telephone Construction Co.—Telephone Apparatus	XIII
Weston Elec. Instrument Co.—Testing Instruments	III
Yankton Telephone Co.—Wanted	XVI

NEW PUBLICATIONS FOR ENGINEERS

THE PRACTICAL PHYSICS OF THE MODERN STEAM BOILER.

By FREDERICK JOHN ROWAN, A. M. I. C. E., M. I. E. S., late Vice-Pres. Fed. Inst. M. E., late Mem. Coun. Soc. Chem. Ind. In this work the physical principles which demand consideration in the construction and working of Steam Boilers are passed in review, and the result is to give a new standpoint from which many of the questions connected with steam generation can be considered. This work deals with the Boiler from the point of view of a Heat-Engine, and, as the title indicates, is occupied with the Physics of the Steam Boiler. It will thus be seen that it proceeds on the lines on which alone improvement in steam generation can be hoped for. Price £1 1s, net. Demy 8vo. Over 400 pp., with numerous illustrations.

HIGH-SPEED STEAM ENGINES.

A Guide to English and Foreign Practice. By W. NORRIS, M. I. Mech. E., &c,, and BEN H. MORGAN. With reproductions of over 156 photographs and drawings, and numerous tests. Second Edition. Demy 8vo, cloth. 10s 6d, net.

"We can cordially recommend this book to any one who wants to know all about high-speed engines."—*Electricity*

PUMPS: THEIR CONSTRUCTION AND MANAGEMENT.

Graphically illustrating the different classes of Pumps, pointing out the advantages and disadvantages of each class, and giving hints as to management. By PHILIP R. BJORLING. Cloth. 3s 6d, net.

"Mr. Philip R. Bjorling is one of the greatest authorities on Pumps."

MODERN METHODS OF SAVING LABOR IN GASWORKS.

A profusely illustrated work, showing the latest and best means employed for economically manipulating and managing Gasworks' material. By C. E. BRACKENBURY. A. M. Inst., C. E. Cloth. 3s 6d, net.

"A most valuable monograph on the subject."—*Scientific American*,

GLASGOW INTERNATIONAL EXHIBITION, 1901—AN ENGINEERING RECORD.

The only complete technical work dealing with the engineering sections. Graphically illustrated with photographs and drawings, and contains several colored plates Cloth. 5s, net,

"I congratulate you on the careful manner in which you have compiled so elaborate and exhaustive a book and one so extremely interesting."—*Mr. Thomas Young, the Engineer to the Exhibition.*

TRANSPORT BY AERIAL ROPEWAYS.

A complete treatise on the leading systems of ropeways. Fully illustrated and described by the designs of each system. Second edition. Paper. Price, 1s; post free, 1s 4d, net.

"An elaborate production describing all the important aerial systems."—*Mining World.*

London: P. S. KING & SON, 2 and 4 Great Smith Street, Westminster

Digitized by Google

PHILADELPHIA STYLE
DESK SET

Digitized by Google

"I have taken the Telephone Magazine one year, and I think it the best thing on earth far a telephone man to read. Please don't make any mistake in my address."
William G. Porter.

Digitized by Google

Weston Electrical Instrument Co.

Waverly Park, NEWARK, N. J., U. S. A.

PORTABLE
DIRECT READING

Voltmeters and Wattmeters

For Alternating and Direct Current Circuits.

The only standard portable instrument which deserves this name. Absolutely permanent, if not abused.

Portable Direct Reading

Voltmeters, Milli-Voltmeters. Ammeters, Milli-Ammeters.

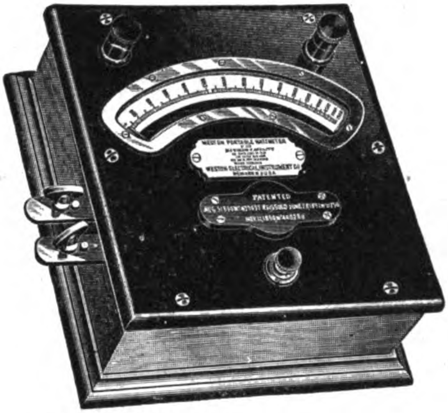

PORTABLE DIRECT READING WATTMETER FOR ALTERNATING AND DIRECT CURRENTS.

A NEW CATALOGUE ON

Voltmeters, Potential Indicators, Ammeters

FOR

Central Stations

AND

Isolated Plants.

Highest Accurancy Least Consumption of Energy.

SEMI-PORTABLE LABORATORY STANDARD VOLTMETERS AND AMMETERS.

The most accurate and most convenient absolute standard ever offered.

Correspondence Solicited.

BERLIN—European Western Electrical Instrument Co., Ritterstrasse No. 88.

LONDON—Elliott Bros., No. 101 St. Martins Lane.

CHICAGO EDISON CO.

DEALERS IN

ELECTRIC LIGHTING SUPPLIES

139 ADAMS STREET

CHICAGO

Digitized by Google

American Electric Telephone Co.

MANUFACTURERS OF

Modern Telephone Apparatus

COMPRISING

Switchboards—**Multiple,**
for Central Energy or
Magneto Systems.

Toll-Line Boards
to meet the most exacting
requirements.

Protective Devices
simple, durable and
efficient.

Cable Terminals
With Improved Sneak Current
Protector and Carbon Arrester.

Distributing Boards

Lightning Arresters

Repeating Coils

and everything requisite for the
construction and equipment of a
TELEPHONE PLANT.

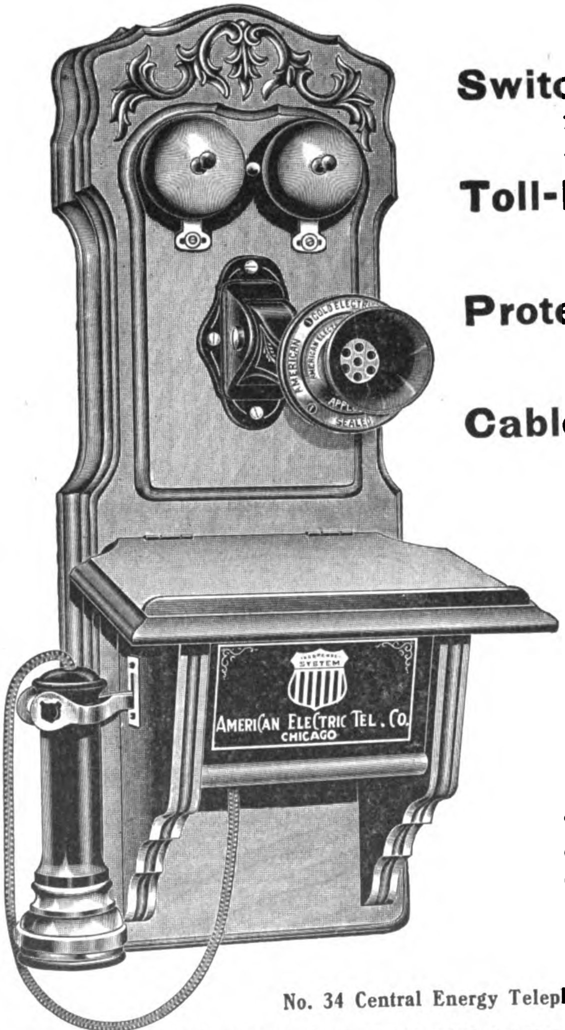

No. 34 Central Energy Telephone.

WITH OUR ENLARGED FACTORY AND INCREASED FACILITIES WE ARE PREPARED TO EXECUTE CONTRACTS OF ANY MAGNITUDE

PROMPTLY AND ECONOMICALLY.

American Electric Telephone Co.

36-58 W. Jackson Blvd., - - CHICAGO, U. S. A.

Digitized by Google

SWEDISH-AMERICAN *FOR QUALITY*

(OTHERS FOR PRICE.)

Maintenance Bills Reduced to the Minimum

The Best Advertisements we have are the

Many Pleased Patrons

**CLAIMS ARE BUT CLAIMS,
BUT FACTS ARE FACTS.**

If you want *convincingosity* write us and same will be sent free. Our Trade Mark is a guarantee of perfection.

Swedish-American Telephone Co.

CHICAGO, ILL.

The Columbia will do more work, last longer, and give better satisfaction than ANY other dry cell.

The same is true of the National No. 2 Cell, compared with other wet cells.

With our cells you can better your service, and cheapen cost of maintenance. Write for prices and particulars.

LOCK DRAWER "L"
CLEVELAND, OHIO

National Carbon Co.

Please mention TELEPHONE MAGAZINE in writing to advertisers.

Digitized by Google

Nungesser Primary Batteries.

Our improved No. 4, 300 ampere-hour Closed Circuit Battery is the most powerful battery of this class. It is put up in both glass and porcelain jars. This battery is very largely used for telephone exchange service, central energy systems, gas and gasoline engine ignition, railway signals, etc.

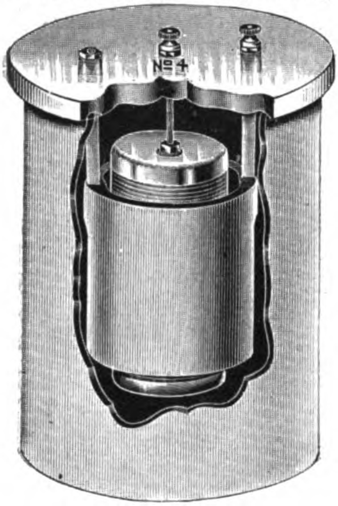

No. 4—SIZE 6½ in. dia. x 7½ in. high.

THE 1900 DRY BATTERY

Is manufactured Expressly for Telephone Exchange Service. In every comparative test made within the past four years, the 1900 Dry Battery has proven its superiority over all other dry or wet batteries. This battery has shown, in many of the most progressive telephone exchanges in this country, over there years' continuous service. without attention of any kind. They are now more largely used than all other dry or wet batteries combined.

OUR PRICES ARE THE LOWEST.

MANUFACTURED BY THE

Nungesser Electric Battery Co.,

CLEVELAND, OHIO, U. S. A.

Western Representative, THOMAS G. GRIER, 126-130 Jackson Boulevard, Chicago, Ill.

SIZE, 2½ in. dia. x 6 in. High.

Keystone Electric Telephone Co.

MANUFACTURERS OF HIGH-GRADE

TELEPHONES AND SWITCHBOARDS

TOLL LINE EQUIPMENT

Exchanges Equipped in Every Detail

WRITE FOR PRICES

Office and Factory, 565 Old Ave., PITTSBURG, PA.

Digitized by Google

"It is one of the best publications of its kind that comes to our office, and we wish you much success."

MOORE & SON, Decatur, Tenn.

IF THE BEST IS
GOOD ENOUGH FOR YOU

YOU WILL BE SATISFIED WITH THE

Telephone Magazine

The Oldest Independent Telephone Paper in the World.

Each Number contains some interesting and instructive articles on

Exchange Construction and Operation,
Telephone Apparatus, Switchboards,
Toll Lines, Line Construction,
Protective Devices,
Central Energy and Other Systems,
Telephone Troubles

And a Monthly Digest of

TELEPHONE AND KINDRED PATENTS.

EIGHT CENTS A MONTH PAYS FOR THE BEST TELEPHONE PAPER, OR A DOLLAR BILL
WILL BRING THE PAPER REGULARLY FOR A YEAR.

NEWSDEALERS SELL IT. SAMPLE COPY FREE.

Address Telephone Magazine

Medinah Temple, CHICAGO, U. S. A.

Digitized by Google

American Electric Telephone Co.

LARGEST MANUFACTURER OF

HIGH GRADE TELEPHONE APPARATUS

IN THE WORLD

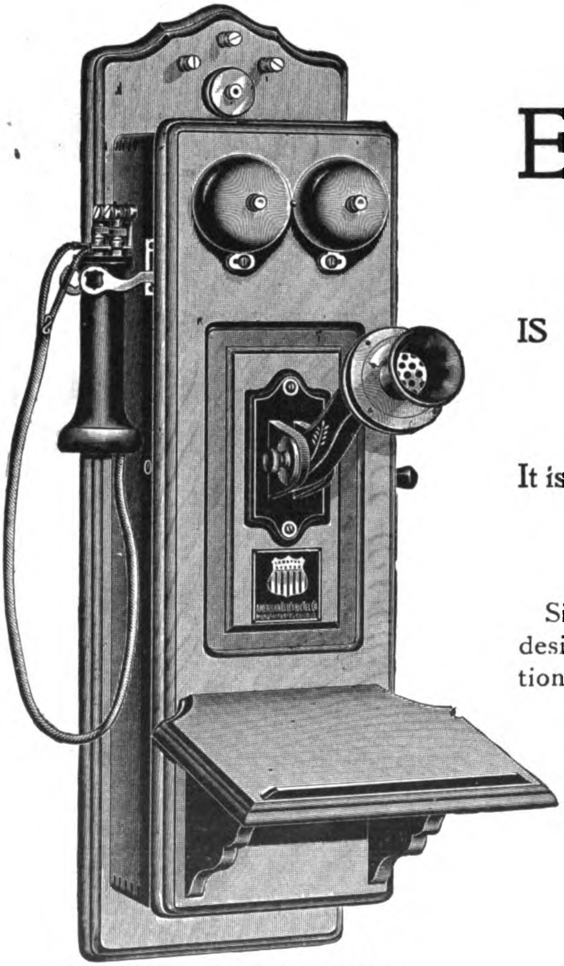

No. 36......Bridging Type

Our No. 36 Exchange Telephone

IS MADE IN SERIES AND BRIDGING TYPES.

It is the most perfect and efficient telephone on the market.

Since the introduction of this design by us, a large number of imitations are being advertised with similar numbers and the same design.

Design and detail patents have been applied for on this type of telephone.

Equipped with new, powerful transmitter with extra powerful generator, special ringer coils wound to 1,600 ohms, making one of the most powerful, efficient and durable telephones ever produced.

INFRINGERS WILL BE PROMPTLY PROSECUTED WHEN PATENTS ISSUE.

SEND FOR SPECIAL CIRCULAR AND PRICES TO

36 to 58 West Jackson Bld., Chicago, U. S. A.

Digitized by Google

DIPLOME DE GRAND PRIX

Awarded to the Telephone Magazine at the Paris Exposition in 1900, it being one of the Nineteen American Journals and Magazines that made a collective exhibit.

Digitized by Google

Willard L. Candee, H. Durant Cheever, } Managers.

1889, Paris Exposition—Medal for Rubber Insulation.
1893, World's Fair—Medal for Rubber Insulation.

Geo. T. Manson, Gen. Supt.
W. H. Hodgins, Secretary.

OKONITE TRADE MARK

THE OKONITE CO., Ltd.,
SOLE MANUFACTURERS OF
OKONITE WIRES, OKONITE TAPE, MANSON TAPE
CANDEE WEATHERPROOF WIRES.
253 Broadway. NEW YORK.

THE
CONLEY FOIL COMPANY
TIN FOIL
FOR ELECTRICAL APPARATUS
521 to 541 West 25th Street, NEW YORK

THE
Royal Trust Company
CHICAGO
Acts as Trustee for Bond Issues
WRITE FOR TERMS

CHAS. C. BULKLEY
PATENT LAWYER
Telephony a Specialty
1460 Monadnock CHICAGO

Invites Correspondence
HENRY A. COIT
Laclede Building, - ST. LOUIS
FINANCES and CONSTRUCTS
TELEPHONE PROPERTIES
Organization Construction

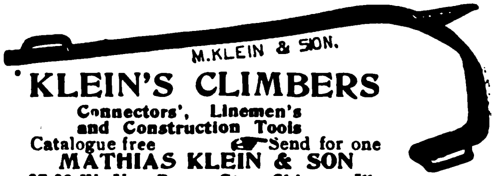

KLEIN'S CLIMBERS
Connectors', Linemen's and Construction Tools
Catalogue free ☞ Send for one
MATHIAS KLEIN & SON
87-89 W. Van Buren St., Chicago, Ills.

Please Note.

Our entire plant was destroyed by fire May 10th. We are glad to say, however, we are

"S. D. B. S. I. T. R."

again, ready for business, and are filling orders as usual, and we solicit your business and assure you same shall have our best attention and be appreciated.

Yours very truly,

Central Manufacturing Co.,
Chattanooga, Tenn., U. S. A.

New York
Insulated Wire Co.
CHICAGO BRANCH
192 South Desplaines Street
CHICAGO, ILL.
Makers of All Kinds of Rubber Covered Wires and Cables.
Main Office: NEW YORK
Branches: BOSTON, SAN FRANCISCO, CHICAGO

Standard Underground Cable Co.
BARE WIRE, INSULATED WIRE, CABLES.
Wire Cables and Accessories for Telephone use, a specialty.
FOR PRICES AND INFORMATION, ADDRESS
PITTSBURG, Westinghouse Bldg. NEW YORK, 56 Liberty St. PHILADELPHIA, 1225 Betz Bldg. CHICAGO, 322 Rookery. SAN FRANCISCO, Mills Bldg. BOSTON, Tremont Bldg.
FACTORIES: Pittsburg, Pa, Oakland, Cal., Perth Amboy, N. J.

Please mention TELEPHONE MAGAZINE in writing to advertisers.

Digitized by Google

Telephone Magazine

Copyrighted, 1902, by Carl E. Kammeyer. Entered at the Chicago Postoffice as mail matter of the second class.

VOL. XX. CHICAGO, AUGUST, 1902. No. 131.

MAGNETS FIFTY YEARS AGO AND TO-DAY.

FREDERICK A. WEGNER.

In the following it will be the author's object to show how some patents or principles that are old can be worked out into new shapes and devices of a useful nature.

In mechanics and electricity there is still a great field for original thought and scientific research.

On page 273 of Lectures on the Electro-Magnet by Sylvanus P. Thompson there is shown a little device (Fig. 74) called Electro-Magnetic Mechanism Working by Repulsion.

This magnet was patented by Brown and Williams in 1850, consisting of an electro-magnet which repelled part of itself. The coil was simply wound *on* a hollow tube, ad inside the coil is a piece, B, of iron bent like the segment of a cylinder to fit in, going from one end to the other.

Another small iron piece, A, also shaped like the segment of a tube, is pivoted in the axis of the coil. When these are magnetized, one tends to move away from the other, both being of the same polarity.

Now the resemblance I wish to show between the two, the one of fifty years ago and the one of to-day, is that in the one I am now going to describe, the coil, instead of being wound *on* the *outside*, is wound on the inside of the tube on a soft iron core L^1. B is disposed of in this manner, the same width of B is *cut out* of the tube, then when it is magnetized it is magnetically unbalanced, A being attracted upwards towards the point marked *q*, completing a local circuit, which is cut off by the insertion of a plug in the answering jack of the telephone switchboard, when it is again restored and can be brought again to view by pushing the button on the telephone while the plug is still in the jack. Following is a description of the signal in detail.

In Fig. 8 is shown a sectional view of one of the signals, which is composed of an outer shell L, of low carbon steel and a soft iron core L^1, wound with a coil K. The shell L, is cut away upon one side *opposite* the armature U, as indicated in Figs. 11, 12 and 16, and when assembled in the switchboard the cutaway portion is underneath, so that the armature U is held in a non-indicating position by *gravity,* with its mass opposite the cutaway portion of the shell.

Cutting away a portion of the outer shell results in making the shell "mag-

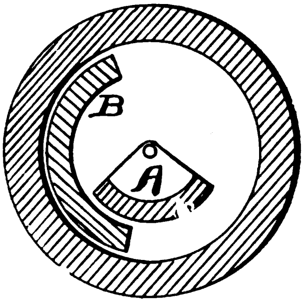

Fig. 74.

netically unbalanced," so to speak, when currents are passed through the coil which it encloses; that is to say, the magnetic center of the shell does not coincide with the center of rotation of the armature or the core-piece, as would be the case were the shell complete and of uniform dimensions.

Therefore, on the passing of the current, the armature seeks to bridge the eccentric magnetic center and the iron core, or is attracted to that side of the shell developing the greatest amount of magnetic force. It, therefore, makes a quarter-revolution against the force of gravity, and thus actuates the signal.

It is apparent that on cessation of the current and the destruction of magnetism

Digitized by Google

the signal by force of gravity will return to its original position.

As is shown in Fig. 9, there are three terminals t, t^1, t^2, from which lead the tion, when the circuit is closed, the coil magnetizes the soft iron core L^1, and the shell which revolves the armature U upon its axis and encloses the circuit at

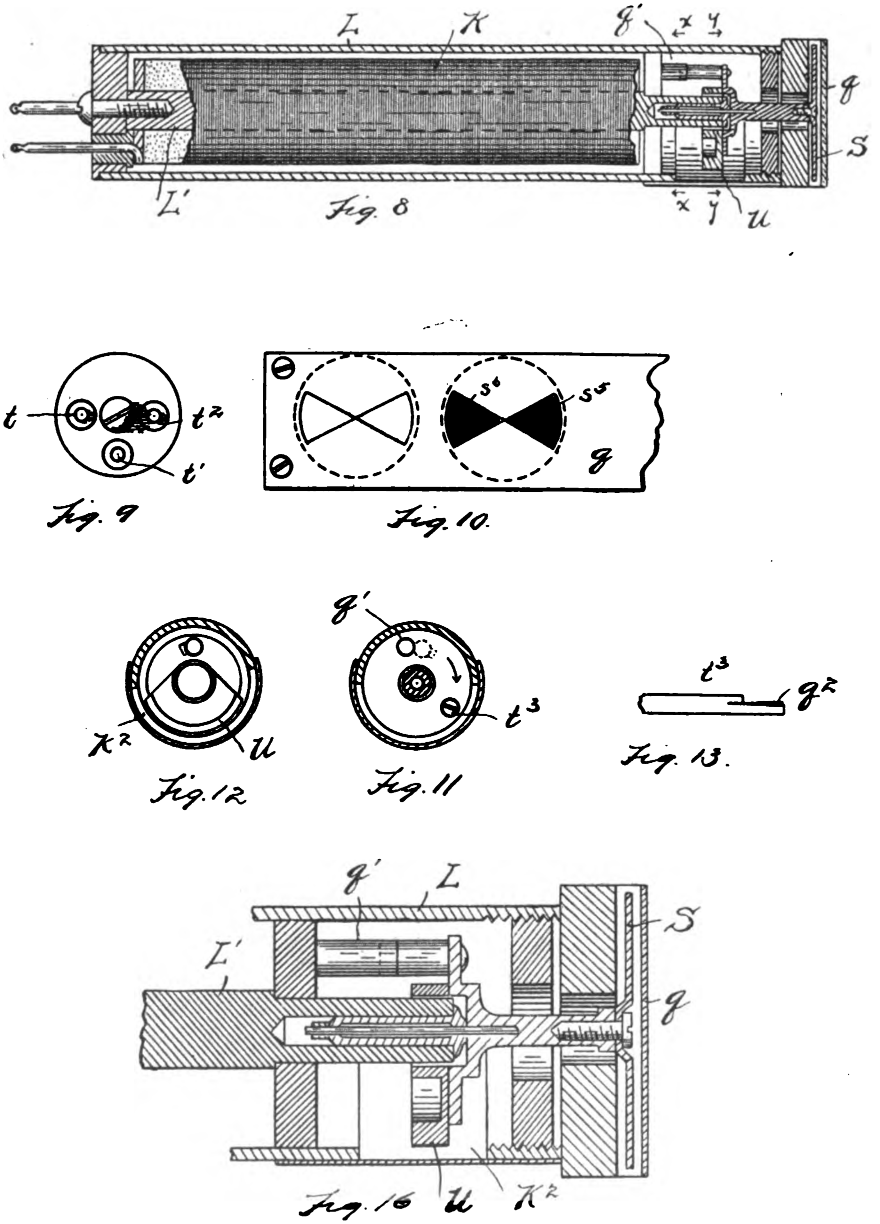

Figs. 8-16.

lines a, a^4, a^9, which are practically continuous from line *a* to substation A^1. The terminal t connects with the wire leading to stop plug t^3. The terminal t^1 t^2 connects with the coil K. In operation contact 5 between lines a^5 and line a which ends in the contact pin t^3 of the signal.

It will be noted in Fig. 12 that the rotating armature u is normally nearer the

Digitized by Google

shell L on one side than it is on the other, and as the core and shell are magnetized, the tendency of the rotating armature is to cross the narrow gap in that side and arrange its mass in the shortest distance between the core and magnetic center of the shell. This causes the rotation specified which is so adjusted that it amounts to a quarter-revolution, as described.

Integral with the armature is a circular shutter S, which has two triangular colored segments s^5, s^6 on its face, as shown in Fig. 10. When in a normal condition these segments are behind the opaque part of the plate q, and when the current is on which revolves the armature the shutters S also makes a partial revolution, bringing the colored segments opposite the orifices or transparent part of the plate q. This plate is made of any transparent substance and is made opaque, except the two segments in front of each signal.

In Fig. 11 is shown a cross-sectional view on line xx of Fig. 8, showing the stop pin q^1, which prevents rotation of the armature beyond a certain point when acted on by gravity.

The armature pin is shown in this view as dotted, and when the current is thrown on it moves forward in the direction of the arrow, making contact at 5, and the wire from this contact leads back across the top of the coil to one of the terminals at line t, as shown in Fig. 9.

Fig. 12 is a view of line y y of Fig. 8, showing the armature and contact plate. It will be seen that the armature usually hangs in the open part K^2 of the shell.

Fig. 13 is a detail of the contact pin t^3 showing a swell spring q^2 inserted in the end, so that when the armature is in contact at that point, and the current is cut off, the spring q^2 gives it an impetus to return to its normal position.

Fig. 16 is an enlarged sectional view of the forward part of the signal, showing the armature shutter, which has already been described.

Summing up the combination of a magnetic core, a coil surrounding the same means for exciting the coil, an unbalanced magnetic shell enclosing the coil, a *weighted* rotating armature attached to the magnetic core, and an indicating disk carried by said armature and adapted to operate as a signal.

The combination of a rotating armature adapted by gravity to remain in a certain position, a magnetic core, an unbalanced magnetic shell, a coil interposed between said core and shell, a stop piece electrically connected to a leading in line, said leading in line, another leading in line electrically connected to the axis of said rotating armature, whereby the rotation of said armature against the stop closes a circuit, and a visual signal operated by said armature and corresponding in its visibility with the closure of said circuit.

Comparing Fig. 74 with Fig. 12, note the similarity of parts, how armature U of Fig. 12 compares with that of A in 74, where B was improved on is in the fact of *cutting away* of a portion of the shell L and the winding of the coil, as before described, *on the core* L^1 with the *addition* of the *parts* contained *in the shell.*

Referring again to Fig. 74, I have A shown to be about ¼ of a circle, which idea was utilized for the purpose of the transparent plate q, and the target or shutter S, with its two triangular colored segments s^5 s^6, as shown in Fig. 10.

The operation of this signal has been very satisfactory. A switchboard on the Common Battery Call System was installed in a large southern city, this board containing 3,000 of the above mentioned signals.

The author has worked on every part of those signals, and knows of the inception and carrying out of the idea, just as above described.

From the factory to the exchange where they were installed, they have been carefully followed up, and the above are the exact facts in the case, demonstrating in this instance how the clever application of electric and mechanical laws and knowledge can evolve something entirely new and extremely useful out of an old principle.

Frederick, Md.—Articles incorporating the Maryland Telephone and Telegraph Company of Frederick City have been filed. The incorporators are A. P. Marsh, Samuel A. Lewis, Thomas Lipps, John Lipps and E. L. Miller. The capital stock is $100,000, divided in 2,000 shares.

Digitized by Google

TELEPHONE DEVELOPMENT IN THE WEST.

From the London Electrical Engineer

It is instructive to compare the state of the telephone industry in this country with that obtaining in other countries, and for this purpose it would be hard to find a more typical example of American practice than the State of Indiana, in the Middle West. Prior to 1895 the well-known Bell Company had the monopoly in this State, but when the basic patents expired numerous smaller telephone companies were formed, and this policy was continued until by 1897 they had grown to a considerable total. Since then this development has gone on, and at the present time the independent telephone companies of Indiana are doing business through 169 exchanges. In the 92 counties of the State the number of their telephones in use is about 55,000, and the amount of capital invested about 2½ millions sterling. In the meantime, however, the Bell Company have been excited to greater activity, and have increased their service, now having about 22,000 telephones in use throughout the State at about 60 exchanges. The result of this competition is that for a population of 2½ millions there are at the present time nearly 80,000 telephones, or about one to every 30 persons. The effect on the price has also been most marked. In the capital city, Indianapolis, the charge is £8 a year for unlimited use in business offices, and just under £5 a year for a similar service in residences. In the smaller exchanges the rate ranges from 4s. to 8s. per month, or from £2. 8s. to £4. 16s. a year. It is noteworthy that of the entire number of telephones, more than one-fifth are in farmhouses, and, of course, these are charged for at the lower rate. The long-distance charge has also been reduced by about 40 per cent since the independent companies came into the field. With a minimum of 2½ d., the average charge for longer distances is about 1-6 d. per mile—*i.e.*, for any ordinary distance outside of the local exchange the rate would be 2½d., up to 30 miles 5d., up to 45 miles 7½d., and so on. It is interesting to read that so far there is no decided tendency towards making a combination or a trust, although in the future it is predicted that the independent companies will probably perfect an organization on the same lines as those which have already been carried out in some 50 separate States and territories in America. At present, however, the telephone business in Indiana remains one of the best examples of the beneficial effects of active competition.

WYANDOTTE PROFITS BY FORFEITURE.

From the Detroit Free Press.

Wyandotte is richer by $1,000, than it ever expected to be, this because the People's Telephone Co. has failed to fulfill the conditions of its contract. At the time the franchise was awarded a $1,000 forfeiture was put up to be paid if the plant was not installed by April 1, 1901. Later the common council granted four months leeway. This time of grace expired August 1st, and at that time Treasurer Nellis and Clerk Maloch visited the Wyandotte Savings bank and presented the certified check deposited by J. W. Martin, as a guaranty. The check was forwarded to Detroit, and Friday afternoon the money was received.

"The telephone company may not like it," remarked Treasurer Nellis, "but we have the money."

Only once before in its history has Wyandotte profited by forfeiture of money.

Urbana, O.—The Urbana Telephone Company has increased its capital stock from $5,000 to $10,000. C. H. Marvin is the president and J. C. Powers secretary.

* * *

Park Rapids, Minn.—The Citizens' Telephone Company of Park Rapids has incorporated with $10,000 capital. L. H. Rice, L. W. Bills, T. C. Myers, F. C. Rice and P. D. Winship are the directors.

* * *

The North Lewisburg (Ohio) Telephone Company has been incorporated. The incorporators are W. H. Willis, L. E. Willis, N. S. Willis, M. S. Willis and L. L. Fisher. The capital stock is $6,000.

* * *

The Minster Home Telephone Company of Minster, Auglaize county, Ohio, has been incorporated with $10,000 capital stock by J. W. Eiting, L. L. Dine, F. J. Maisen, John Laufersweiler, M. H. Osborn and others.

Digitized by Google

UPPER OHIO VALLEY NOTES.

W. G. IRWIN.

The Standard Telephone Company of Newtown, Pa., has arranged to extend its line to Langhorn, Pa.

* * *

The Clinton Telephone Company of Columbus, O., has been chartered under the laws of Delaware to build a telephone line in eastern Ohio.

* * *

The People's Telephone Company of Morgantown, W. Va., has established a new metallic circuit line between that place and Fairmont.

* * *

The Wyoming Telephone Company of Tunkhannock, Pa., has gone into new hands, and the lines of the company will be greatly improved.

* * *

The Zanesville Telephone & Telegraph Company of Zanesville, O., has during the past six weeks added over 100 new subscribers to its service.

* * *

The Central Union Telephone Company of Findley, O., has now over 1,500 instruments in use, a remarkable gain during the past six months.

* * *

The Marion County Telephone Company of Marion County, O., has been formed and will establish an extensive rural system in that county.

* * *

The Carbondale Telephone Company of Carbondale, Pa., is planning a number of improvements, and will extend its lines to Crystal Lake and other points.

* * *

The Citizens' Telephone Company of Batavia, O., is rapidly extending its territory, connections having been made with Warren, Lebanon and other towns.

* * *

The Newark Independent Telephone Company of Newark, O., is reconstructing its system in that city, and will extend its service to a number of nearby towns.

* * *

The Bergholz Telephone Company of Bergholz, O., has been incorporated with a capital of $5,000 and will build a line in Jefferson and Columbiana counties, O.

* * *

The People's Telephone Company of Morgantown, W. Va., has under way a number of improvements to its service. The company will expend $40,000 in this work.

* * *

The capital of the Hicksville Telephone Company of Hicksville, O., has been increased to $20,000, and a number of improvements will be made by the company.

* * *

The Canton, O., Board of Trade has made a proposition to purchase the stock of the County Telephone Company Exchange in that city, an option of $250,000 having been taken.

* * *

The Tri-State Telephone Company, which is operating in Maryland and West Virginia, has lately made connections with a number of Western Pennsylvania towns and will enter Pittsburg.

* * *

The new Telephone exchange building of the Central District Printing and Telephone Company on Fourth avenue in Pittsburg is completed and will be occupied by the company about September 1st.

* * *

The Phoenix Telephone Company of Steubenville, O., has been taken into court on a preliminary injunction filed by citizens of that town to restrain the company from placing its poles in front of residences.

* * *

The Augusta Telephone Company of Mannington, W. Va., has been chartered to build a system in that town. J. N. Devore is president; C. E. Jolliffe, treasurer; R. W. Bryan, secretary; and Caleb Burt, manager.

* * *

The Retail Grocers' Association of Youngstown, O., has passed a resolution to use only the service of the Youngstown Telephone Company. About 60 per cent of the grocers of that city are members of the association.

* * *

The National Telephone Company of Wheeling, W. Va., has opened up a new line between that city and McMechan, the connection being made through the Benwood central office. The line is now being extended from McMechan, W. Va., to Moundsville, W. Va., where connec-

Digitized by Google

tions will be made with the Federal Telephone Company's line.

* * *

The Pohoqualine Telephone Company has awarded the contract for the construction of a line from Briadheadsville, Pa., to Stroudsburg, *via* Scotia, Stormsville and Bossardsville. The new line is to be completed by September 1st.

* * *

The North Lewisburg Telephone Company of North Lewisburg, O., has been incorporated with a capital of $6,000, and will build a new line. The incorporators are W. H. Willis, L. E. Willis, N. S. Willis, M. S. Willis and L. L. Fisher.

* * *

The United Telephone Company of Harrisburg, Pa., has completed its long distance line to Elizabethville, Pa., and now has a service between Harrisburg, Millersburg, Lykens, Elizabethville, and other towns in the Susquehanna Valley.

* * *

On July 31st last the National Telephone Company of Wheeling, W. Va., celebrated its first anniversary. During the one year of its operations the company has increased its list of subscribers to 1,800, and is now building a number of rural lines.

* * *

Within the past three weeks the Consolidated Telephone Company has suffered two fires at Fairmont, W. Va., entailing a loss of about $7,000. Both fires were caused by the breaking of electric light wires, which dropped across the company's wires.

* * *

The Speechley Telephone Company of Butler, Pa., has been incorporated under the laws of Pennsylvania and will build a line twenty-five miles long through the Speechley oil field in Butler County, Pa. The company will also extend its services to the farmers of that district.

* * *

The Federal Telephone Company of Pittsburg, Pa., has made connections between Washington, Pa., and Findleyville and Courtney, two important mining towns in Washington County, Pa. Lines are now being built to Monongahela, and other towns in the Monongahela Valley.

The Urbana Telephone Company of Urbana, O., which has been recently formed with a capital of $50,000, has increased its capital to $100,000. The company has now over 1,200 instruments in use, 800 in Urbana, and the remainder in the rural service which is operated by the company.

* * *

The McKeesport Telephone Company of McKeesport, Pa., has recently been having considerable trouble, due to interference with its service. The cable was cut in Reynoldsville, and on the Dravosburg bridge across the Monongahela. The company has offered a reward of $1,000 for the arrest of the guilty parties.

* * *

The Lykens Valley Telephone Company has been absorbed by the United Telephone Company. The Lykens Valley Company's lines cover Dauphin and parts of Lebanon, Northumberland and Schuylkill counties in Central Pennsylvania and has connections with the Pennsylvania Telephone Company at Tremont, Pa.

* * *

The North River Telephone Company has been formed to construct a system twelve miles long along the North River in West Virginia, from Hanging Rock to Rio. The headquarters of the company are in Delray, W. Va. Through connections recently made with the Pittsburg & Allegheny Telephone Company the West Penn Telephone Company has secured entrance to Pittsburg, and the new arrangement gives the Pittsburg & Allegheny Telephone Company service to a number of towns in Ohio and West Virginia.

* * *

In the suit of the American Bell Telephone Company against the Pittsburg & Allegheny Telephone Company of Pittsburg in the U. S. Circuit Court at Pittsburg last week, in regard to the alleged infringement of the latter company on patents for improvements in the system of Telephonic circuits, the latter company in their answer to the complainant, stated that the apparatus in question is old and cited some fifty other patents which were granted prior to that granted to Chichester A. Bell which are now in question.

Digitized by Google

SECOND ANNUAL CONVENTION OF THE NATIONAL ELECTRICAL CONTRACTORS' ASSOCIATION OF THE UNITED STATES.

The second annual Convention of the National Electrical Contractors' Association was held at Philadelphia and Atlantic City July 16 and 17, 1902.

The Philadelphia local association was the host, and enough praise cannot be given them for their most liberal and well planned entertainment.

Owing to the meeting of the N. Y. State Association at Albany, many of the delegates from the West who had been invited by the Albany local, the entertainers of the State Association, stopped over at Albany and enjoyed the hospitality of that association.

The Board of Directors of the National Association met at the Franklin Institute in Philadelphia, at 9 o'clock on the morning of the 16th instant. Owing to the fact that some of the N. Y. State members and their guests from the West, did not arrive until 10 o'clock, the regular routine of the directors' meeting was not gone ahead with promptly; in the meantime, however, the directors met the Philadelphia entertainment committee:

Mr. J. F. Buchanan,	Mr. Frank E. McIntire,
Mr. Henry D'Oller, Jr.,	Mr. Walter C. McIntire
Mr. Wm. L. D'Oller,	Mr. M. R. Muckle, Jr.,
Mr. S. A. Jellett,	Mr. Clayton W. Pike,
Mr. Edwin R. Keller,	Mr. T. Carpenter Smith
Mr. H. G. Kepler,	Mr. Gilbert S. Smith,
Mr. Alfred A. Lowry,	Mr. I. C. Walker,
Mr. H. A. Loeb,	Mr. R. C. Williams.

The chairman appointed Messrs. Howe and McKay of Baltimore to audit the treasurer's accounts, prior to the meeting being called to order. These gentlemen went very thoroughly over the entire matter, and were just ready to report when the belated directors arrived.

The President, Charles L. Eidlitz of New York called the meeting to order, and there were present 1st Vice President Mr. G. M. Jones, Minneapolis, Minn.; 2d Vice President, Mr. H. K. McKay, Baltimore, Md.; Treasurer, Mr. George R. Mathieu, Pittsburg, Pa.; Secretary, Mr. W. H. Morton, Utica, N. Y.; Sergeant at Arms, Mr. J. C. Stearns, Buffalo, N. Y.; Directors from State of N. Y., Mr. M. L. Barnes, Troy; Mr. E. D. McCarthy, Buffalo; Mr. James Hilton, Syracuse; Director from State of Pennsylvania, Mr. H. A. Loeb, Philadelphia; Director from State of Michigan, Mr. E. McCleary, Detroit; Director from State of Minnesota, Mr. W. I. Gray, Minneapolis; Director from State of Maryland, Mr. John K. How, Baltimore; Director from State of Missouri, Mr. F. E. Newbery, St. Louis.

Mr. E. T. Cooke of St. Louis, Mo., the 2d Vice President, was the only absentee. A letter received from Mr. Cooke stated that he had sprained his ankle a day or two prior to the meeting, which prevented his attendance. The Board greatly regretted Mr. Cooke's absence, as he is an able and enthusiastic worker.

The reports of officers and committees were then taken up, and the work prepared for presentation to the meeting of the delegates.

At 1 p. m. the Board adjourned to meet with the delegates at 2 o'clock. All hands hurried to the Hotel Waldron, which was the official headquarters, where the several hundred arrivals of delegates, supply men and manufacturers were gathered in the corridors and dining room.

A hasty lunch and a rapid return to the Institute was followed by the meeting of the delegates, which was called to order at 2:30 p. m.

There were present delegates representing 172 firms, and the business of the convention proceeded rapidly. Each delegate was compelled to present his credentials, and register his official vote.

The list of delegates was as follows:

New York State Association.—Mr. Strong, New York; Mr. Barnes, Troy; Mr. Balda, Utica; Mr. Hilton, Syracuse; Mr. Peacock, Rochester; Mr. McCarthy, Buffalo.

Minnesota State Association.—Mr. Crowley, Duluth; Mr. Hall, St. Paul; Mr. Demin, Minneapolis; Minneapolis Elec. Con. Co., Minneapolis; Mr. Gray, Minneapolis.

Michigan State Association.—Mr. McCleary, Detroit; Mr. Miner, Detroit; Mr. Wheeler, Grand Rapids.

Missouri State Association.—Mr. Newbery, St. Louis; Mr. Adam, St. Louis; Mr. Sutter, St. Louis.

District of Columbia Association.—Mr. Anderson, Washington; Mr. Metzel, Washington.

Pennsylvania State Association.—Mr. Mathieu, Pittsburg.

Digitized by Google

Maryland State Association.—Mr. How, Baltimore; Mr. McCay, Baltimore; Mr. Samuels, Baltimore; Mr. Zamoiski, Baltimore.

Indiana State Association.—Mr. Sanborn, Indianapolis.

Toledo Association.—Mr. Grah, Toledo.

Cincinnati Association.—Mr. Schulman, Cincinnati; Mr. Lawton, Cincinnati.

Individuals.—Mr. A. A. Kind, Jacksonville, Fla.; Electric Motor Equipment Co., Newark, N. J.

The Chairman announced that owing to the short space of time allotted to the business portion of the meeting, he would be compelled to rule severely and rapidly, and that he would hold all speakers absolutely to the point at issue. He stated that the business for which the meeting was called must be done irrespective of what the social engagements might be, and immediately it became clear to the assembly that the closer they stuck to business, the sooner the meeting would be adjourned. The detailed business transactions cannot be published in these columns.

The Indiana State Association and a local association from Florida were admitted to membership.

A notice was received from the St. Louis Association that it had organized as the Association of the State of Missouri with an increase in membership.

With these two additions to the membership, which were received in time to be acted upon by the Board of Directors, the total membership of the Association was found to number 206 firms.

Several additional letters were received, but they were not in such shape as to warrant considering them as applications for membership. After considerable routine business the meeting adjourned at 4:30 p. m.

The guests and others interested were in waiting in the corridor of the Institute, and a rapid ride was taken to the Arch St. Wharf, where all boarded a special boat chartered for the occasion, and the Delaware River & Bay, Cramp shipyards, the League Island navy yard, and many other interesting sights were pointed out by the Philadelphia committee, who were constantly on hand either directing the music or furnishing cigars, programmes, etc., and generally looking after the welfare of all concerned.

At 6:30 p. m. a landing was made at Washington Park. For about half an hour the committee disappeared, and the delegates and others amused themselves sight-seeing. It developed later that the committee were busy arranging the dinner cards and generally superintending the preparations for the banquet which started promptly at 7 o'clock. About 275 delegates and guests sat down to dinner and a most enjoyable evening was spent.

A band of about 60 pieces at one end of the dining hall, and an electric fountain to one side aided in the general uproar.

The supply man was in his element; the writer is unable to say just when the the party of diners finally broke up; he is satisfied, however, that they did break up, for all hands were ready for the train for Atlantic City at 10 o'clock on Thursday morning.

A special train had been arranged for, arriving at Atlantic City at 11:15 a. m. The committee from Philadelphia were again in evidence circulating through the cars with everything necessary for the comfort of the delegates and their friends.

On the arrival of the train at its destination, the delegates were allowed until 12:30 to examine the board walk with its gay shops and numerous hotels. It appeared to be their ambition to ride in the wheel chairs, for within a few moments after their arrival, wheel chairs galore occupied by electrical men, with their bright red and blue badges were tearing up and down the board walk, the colored attendants having had instructions to cover the entire four miles of walk before lunch. Luncheon was served at Bleak House, one of the large hotels directly adjoining the board walk.

At 2 o'clock the chairman again called the meeting to order in the middle pavilion of the steel pier. The remodeling of the constitution and by-laws, the appointing of committees and the election of officers required the entire afternoon.

It had been arranged last year that the Convention was to be held in St. Louis, Mo., in 1903, but owing to the postponement of the Exposition at St. Louis until 1904, the St. Louis delegates requested that the Convention be held in their city in that year. Immediately after, the De-

Digitized by Google

troit delegates extended a hearty invitation for Detroit in 1903, which was accepted. Considerable opposition to this action came from the Minneapolis section of the room, who wanted to be hosts, and it appeared at one time as though it would be difficult to decide, but the Minneapolis section of the room, who wanted to be hosts, and it appeared at one time as though it would be difficult to decide, but the Minneapolis section finally gave way in favor of Detroit.

The meeting did not adjourn until 7:30 p. m.

Many of the members who had complained in the morning that enough business was not being transacted, threw up their hands when the meeting adjourned, and gave it as their opinion that enough business has been gone through with to last for the next year.

A change in the constitution reduced the number of directors for N. Y. State, and M. L. Barnes of Troy, who had been anxious for some time to be relieved from the duties, requested that his name be dropped from the nomination. His request was complied with with much regret by all who knew the valuable work and service contributed by this able director during the past year.

The officers elected for the ensuing year were as follows:

National President, Mr. Charles L. Eidlitz, New York, N. Y.

1st Vice President, Mr. G. M. Jones, Minneapolis, Minn.

2d Vice President, Mr. E. T. Cooke, St. Louis, Mo.

3d Vice President, Mr. H. K. McCay, Baltimore, Md.

Treasurer, Mr. George R. Mathieu, Pittsburg, Pa.

Secretary, Mr. W. H. Morton, Utica, N. Y.

Sergeant at Arms, Mr. J. C. Stearns, Buffalo, N. Y.

Directors from N. Y., Mr. E. D. McCarthy, Buffalo; Mr. James Hilton, Syracuse.

Director from Pennsylvania, Mr. H. A. Loeb, Philadelphia.

Director from Michigan, E. McCleary, Detroit.

Director from Minnesota, Mr. W. I. Gray, Minneapolis.

Director from Maryland, Mr. John K. How, Baltimore.

Director from Missouri, Mr. F. E. Newbery, St. Louis.

Director from Indiana, Mr. F. Sanborn, Indianapolis.

Director from Washington, D. C., Mr. D. M. Anderson, Washington.

Several important committees were appointed, which the writer prefers not to mention in these columns.

The Convention was then declared officially at an end.

The delegates hurried to the hotel, most of them intent upon seeing the attractions of Atlantic City.

The board of directors, however, after a hasty supper, were called to order again at 8 p. m. in one of the large parlors of the Bleak House to meet a committee from another organization which had been waiting all afternoon, and to determine upon other minor details which required their attention in connection with the work of the delegates during the afternoon.

At 10:45 p. m. the board adjourned, after having determined upon having the semi-annual meeting in February in the city of Buffalo. The rest of the evening was spent on the board walk and in the various places of amusement throughout the city, and in the early hours of the morning red and blue ribbons could be seen slowly wending their way towards the hotel.

Thus ended the second convention of the National Electrical Contractors' Association, pronounced by all who attended it as a great success. It is to be hoped that at the next meeting a year from now every member of the organization will be present, and having once attended, we are confident that each year will find them in their place ready to take action for the benefit of the business of the electrical contractor.

LIST OF MEMBERS OF THE NATIONAL ELECTRICAL CONTRACTORS' ASSOCIATION.

REGISTERED AT THE SECOND ANNUAL CONVENTION.

E. McCleary, representing McCleary & Colquitt Co., Detroit.

D. M. Anderson, representing D. M. Anderson & Co., Washington, D. C.

Digitized by Google

M. L. Barnes, representing Barnes & Payton, Troy.

E. M. Lawton, representing Lawton Electric Co., Cincinnati.

H. A. Loeb, representing Francis Bros. & Jellett, Inc., Philadelphia.

R. F. Metzel, Washington, D. C.

W. H. Morton, representing Johnson & Morton, Utica.

W. I. Peacock, representing Snyder Supply & Electric Co., Rochester.

C. Wilbur Sallada, representing Prior & Son, Williamsport, Pa.

S. Davis, representing Conduit Wiring Co., N. Y. City.

Edwin R. Keller, representing Keller, Pike & Co., Philadelphia.

F. W. Newman, representing Albany District Telegraph Co., Albany.

F. B. Adam, representing Frank Adam Electric Co., St. Louis.

J. D. Van Wagoner, representing Van Wagoner & Linn, N. Y. City.

W. I. Gray, representing W. I. Gray & Co., Minneapolis.

Thos. H. Bell, Albany.

F. S. Blackall, representing Blackall & Baldwin, N. Y. City.

Geo. R. Mathieu, Pittsburg.

P. C. Haviland, representing Edwards & Co., N. Y. City.

J. C. Sterns, representing J. C. Sterns & Co., Buffalo.

A. P. Kingston, Little Falls, N. Y.

Frederick Erastus Dolbier, representing Walker & Kepler, Philadelphia.

E. J. McAllister, representing Motor & Equipment Co., Newark, N. J.

W. L. Wilhelm, representing Wilhelm Telephone Co., Buffalo.

W. C. Ballda, representing B. & C. Electrical Construction Co., Utica.

G. W. Russell, Jr., representing Russell & Co., N. Y. City.

Rudolf Schmidt, representing Rudolf Schmidt & Co., Rochester.

J. R. Strong, representing Tucker Electric Construction Co., N. Y. City.

W. I. Patterson, representing Springer & Patterson, Pittsburg.

F. J. Miner, representing Seidler-Miner Electric Co., Detroit.

John K. How, representing John K. How & Co., Baltimore.

Robert A. M. Steele, Pittsburg.

E. S. Keefer, representing Western Electric Co., N. Y. City.

A. S. Schulman, Cincinnati.

M. S. Horton, representing Fredk. Fisk & M. S. Horton, Rochester.

Emil Grah, Toledo.

F. E. Newbery, representing F. E. Newbery & Co., St. Louis.

Chas. J. Sutter, St. Louis.

Walter C. McIntire, representing W. C. McIntire & Co., Philadelphia.

Jas. F. Burns, Schenectady.

W. J. Snyder, Pittsburg.

J. C. Hatzel, representing Hatzel & Buehler, N. Y. City.

H. I. Sackett, Buffalo.

D. D. Crowley, representing Crowley Electric Co., Duluth.

M. B. Wheeler, representing M. B. Wheeler Electric Co., Grand Rapids.

H. K. McCay, representing McCay Engineering Co., Baltimore.

A. J. Martin, representing Commercial Construction Co., N. Y. City.

J. F. Buchanan, representing J. F. Buchanan & Co., Philadelphia.

W. E. J. Deming, representing Deming Electric Co., Minneapolis.

E. G. Bernard, representing E. G. Bernard Co., Troy.

T. Carpenter Smith, representing M. R. Muckle, Jr., & Co., Philadelphia.

Chas. L. Eidlitz, N. Y. City.

Jas. Hilton, representing Rogers & Hilton, Syracuse.

Harry H. Alexander, N. Y. City.

Thos. Hall, representing Northwestern Electric Co., St. Paul.

Edmund McCarthy, representing McCarthy Bros. & Ford, Buffalo.

Herman Samuel, representing Kingsbury-Samuel Electric Co., Baltimore.

G. M. Jones, representing Minneapolis Electric & Construction Co., Minneapolis.

Joseph M. Zamoiski, Baltimore.

THE CONVENTION SPECIAL.

At 10 o'clock the New York City delegates and their friends, accompanied by members from New York state and other points, were taken on a special train via the Central railroad of New Jersey from New York to Philadelphia, arriving in the latter city about noon.

A feature of the "special" was the elimination of all trouble and worry on the part of the passengers. Those who had

Digitized by Google

secured their accommodations simply had to present themselves at the depot, when they were handed an envelope bearing their name, train and Pullman car numbers, and the number of their seat. A decided improvement on the usual method of being pummeled and jammed in front of a ticket office, and then passed on from one railroad official to another nearly all of whom growl out desired information in unintelligible jargon, if they give it at all.

Many faces prominently known in electrical circles were recognized on the "special." Luther Stieringer, one of the first to engage in electrical contracting, was seen in earnest conversation with Col. C. A. Benten, a veteran cavalry officer, who many years ago responded for the last time to "Boots and Saddles," and devoted his time and energies to the elevation of people and other solids by means of electric transmission of power.

T. C. Martin of the Electrical World and Engineer, and J. M. Wakeman of the Street Railway Journal, gave proof of their interest in the association by leaving desks and work and joining the party on the "special."

Arthur Williams of the New York Edison Co. gave tangible evidence by his presence on the "special" of the cordial relations existing between the Electrical Contractors' Association and the great central station interests of New York City, and the effect of his genial personality will live long in the memory of all with whom he came in contact.

Mr. Williams and his able lieutenant, A. A. Pope, extended cordial invitations to all the delegates to visit the magnificent stations of the New York Edison Co.

Many other well-known electrical people were recognized on the "special," which carried one of the most congenial parties that has ever attended a convention, and it is safe to say that every passenger on the train feels indebted to the Electrical Contractors' Association of New York City, by whose efforts through their able master of transportation, Mr. Alex. Henderson, it became a feature of the second annual convention of the National Electrical Contractors' Association.

H. B. Kirkland and R. B. Corey, seated on opposite sides of the same car, preserved an equilibruim and smoothness of motion that meant volumes for the geniality and solidity of these two gentlemen. J. B. Olsen, A. Annable, F. W. Newman, F. E. Newbery, Tom Bibber, Herbert Sackett, F. S. Blackall, Frank Miner, Harry Alexander, J. C. Hatzel, E. S. Keefer, C. T. Hills, J. R. Strong, A. J. Martin, S. Davis, H. E. Monk, Avery P. Eckert, Mortimer Norden, H. G. Issertel, J. F. Burns, W. Van Wagener, H. C. Adams, Rudolph Schmidt, J. H. Hilton, Mesdames Horton, Whipple, Jennings, Peacock, Crowley, Hall, Kingston, Haviland, Hawkins, Sutter, and the irrepressible John Dale made up a party that as a representative body of men in the electrical field it would be difficult to duplicate.

GERMAN TELEPHONES.

FROM THE LONDON ELECTRICAL ENGINEER

According to a statement issued by the German Imperial Post Office, the Berlin telephone network constitutes the largest in the world at the present time, the number of subscribers or connections, including main and branch lines, amounting to 60,683. There has been a rapid development of branch lines as a result of the new law relating to the tariff, there now being 15,000 connections of this kind. The principal exchange has 10,482 subscribers and the smallest has 4,622 connections, and excluding Bavaria and Wurtemberg the number of exchanges throughout the empire totals 3,303. The longest line, over which an average of 30 conversations takes place daily, is between Berlin and Paris, a distance of 1,186 km. The second position is ocupied by the line connecting the German capital with Budapest, which is 980 km., and is used about 26 times daily; the third is from Berlin to Memel, which is 948 km. in length, and serves on an average for 79 conversations per day; and the fourth line forms a connection with Basle, of a length of 923 km., and is used 17 times daily. Among other long-distance connections may be mentioned those between Berlin on the one hand and Vienna, Prague, Munich, Hanover, Cologne, and Frankfort-on-Maine on the other.—*Financial Times.*

Digitized by Google

THE SEMI-ANNUAL MEETING OF THE UNITED ELECTRICAL CONTRACTORS' ASSOCIATION OF NEW YORK STATE.

The semi-annual meeting of the United Electrical Contractors' Association of the State of New York was held in the Supreme Court Chambers at Albany, July 15, with a full representation of the six local associations which comprises New York City, eastern New York, Utica, Syracuse, Rochester and Buffalo. A very cordial welcome was given the association to the city of Albany, in behalf of the chief executive, by Mr. Hutchins, private secretary to Mayor Gans. President Schmidt of the State Association responded in behalf of the visitors. City Clerk Bresler was also presented, and happily greeted the members. The Common Council Chamber, with its priceless collection of paintings of the Governors of New York State, was visited, and then, under the guidance of Messrs. Luckhurst and Havens of Albany, the famous State Capitol, costing $25,000,000, was inspected. The beautiful architecture, rare paintings and sculptural work of this great building were a source of wonder and a revelation to many of the party who visited the capital for the first time.

Among the guests of the association were several members of the National Association, on their way from distant points to Philadelphia to attend their annual meeting on the 16th. These included National Director Judge McCleary of Detroit, one of the ablest and most active members of the national body; National Director W. I. Gray of Minneapolis, one of the prominent and solid business men of the Northwest, and who has a contract for the electrical work on the new Minnesota capitol to the amount of over $300,000. He was accompanied by Vice-President G. M. Jones of Minneapolis, who has the distinction of having had introduced and made a law the first and only bill passed by any state legislature for the benefit of the electrician.

Mr. Crowley of the Crowley Electric Co. of Duluth, a former New York State man, was with the Minnesota contingent, and was accompanied by Mrs. Crowley, both of whom will spend some time in New York State at the old homestead of Mr. Crowley's parents, near Rochester. Mr. Hall was another of the Minnesota party.

The state of Michigan was also represented by Mr. Wheeler of Grand Rapids, and the state of Missouri by National Director F. E. Newbery and Mrs. Newbery, Charles J. Sutton and Frank Adam, all of St. Louis. These visitors were a very pleasing acquisition to the party and made many friends among their Eastern associates.

There was also among the guests a bride of two weeks—Mrs. Sackett of Buffalo. Mr. and Mrs. Sackett were on their bridal tour, and when this became known, congratulations were general, and the bride and groom were the recipients of all the attention due a newly wedded couple.

Following the morning meeting of directors, and later of the delegates, at which the usual routine business was transacted, and much of interest to the state organization was taken up and adopted, the members and guests boarded a trolley car, which was in waiting at the city building, and enjoyed a ride of seventeen miles to Schenectady. This trip and the sight-seeing that followed will ever be remembered. The car was run directly into the yard of the General Electric Co.'s works, and on alighting the party, numbering about sixty, were ushered into the dining hall of the new office building, where a generous luncheon was served. Then all were ready to witness the sights incident to the manufacture of the many articles that go to make up the business of the supply man and of the installation of the contractor. All expected a great deal, but there were few who were prepared for the wonderful sights and the extent of these great works. As the party journeyed from building to building and witnessed the wonderful ingenuity of man, it simply became bewildering, and the wonder of all, of the perfect system carried out by the General Electric Co. in the handling of the 7,000 employes, and of the vast output of this great concern.

Two attaches of the G. E. Co.—Mr. Gale of the Schenectady works and Mr. Clark of the New York office—accompanied the party on the car, and their thor-

Digitized by Google

ough knowledge of all the details of the works were so generously imparted to the visitors that a vote of thanks was unanimously extended them.

Messrs. Gale and Clark will always be held in the kindest remembrance by all who participated in the trip to Schenectady and the inspection of the G. E. works. The party was honored on the return trip to Albany by having the vice-president of the General Electric Co.—General Griffin—accompany it.

After a two hours' rest at the Ten Eyck, the headquarters of the State Association, forty-six of the party took the steamer Adirondack, the floating palace of the Hudson, and started on their pilgrimage to the City of Brotherly Love. The night was an ideal one, and with a brilliant moonlight and the ever-changing panorama presented by the searchlight, gave to the many who had never taken a trip on the beautiful Hudson river a remembrance that will always remain, of the beauties of the Rhine of America. There was still another pleasant feature which the committee of the eastern New Yorkers had arranged as a suitable ending to the day's enjoyment, and that was the novelty of a banquet on the river. About 9:30 p. m. the forty-six members and guests were invited to assemble on the main deck, and were ushered into the beautiful dining-room, which was resplendent with electric lights, snowy linen and polished silver. A corps of colored waiters in full dress was now brought into requisition, and the service of the tempting menu was prompt and efficient. After the various courses were disposed of, the assemblage was called to order by National Director M. L. Barnes, who expressed the regrets of the committee in not having National President Eidlitz present, who had been selected as toastmaster.

President F. W. Newman of the Eastern New York Association, and chairman of the committee of arrangements, was first called on for a speech of welcome to the guests, and was followed by Judge McCleary of Detroit, who, though claiming to be somewhat embarrassed at being called upon, showed himself to be a Depew as an after-dinner orator. Then followed Senator Gray from the Northwest, Mr. Newbery from the Southwest, Mr. Wheeler of Grand Rapids, from the Western section, Mr. Reynolds representing the New York State Board of Underwriters, Mr. Keefer of New York, Mr. Bibber of Boston, Mr. McDowell of New York, and Mr. Whipple, representing the supply dealers; Mr. Hover, representing the wire manufacturers; Messrs. Strong of New York, Burns of Schenectady, Balda of Utica, National Director Hilton of Syracuse, State President Schmidt of Rochester, and National Director McCarthy of Buffalo, who spoke for their respective local associations. Mr. Clark responded for the General Electric Co. Mr. Sackett of Buffalo related the pleasures of a honeymoon, and was corroborated by Mrs. Sackett. Mr. Miner of Detroit and Mr. Crowley of Duluth made some pleasant allusions to the occasion, and was seconded by Mrs. Crowley. Messrs. Sutter and Adam of St. Louis, Mr. Hall and Mr. Jones of Minnesota, and Vice-President Davis of New York spoke very cordially of the day's entertainment, as did Mrs. Newbery of St. Louis, who received a decided ovation.

A character recitation, "Bingen on the Rhine," as given by "Tommy" Bibber, was most heartily applauded, and marked Tommy as an up-to-date comedian. One of the mutually appreciative features of the occasion was the presence of the ladies, who were provided with a private table, and were as one of the party.

After two hours of pleasure, the labor of the committee was at an end, and the program of the semi-annual meeting was voted a complete success. Staterooms were sought, and the New York State meeting of 1902 was at an end. All were up early to view the beautiful scenery of the lower Hudson, and sights of New York harbor. The party were met at Jersey City by a large contingent of electrical men, who had provided a special train of parlor cars for Philadelphia. At noon they were turned over to a committee of Pennsylvania friends, and with what result will be noted by the chronicler of the National Association.

The Rodeford (Mercer County, Cal.) Toll Line Telephone Company; capital stock, $10,000; has been incorporated by D. H. Robinson, George H. O'Neil, L. A. Burgiss, William Pontius and C. Smith.

Digitized by Google

UNITED ELECTRICAL CONTRACTORS ASSOCIATION OF MINNESOTA.

The convention of the United Electrical Contractors' Association of Minnesota was held in the city of Duluth, Minn., on June 23, 1902. The Minneapolis and St. Paul delegations having left the Twin Cities on the 22d aboard the observation car of the "Omaha Twilight Limited," arriving in Duluth at 9:35 p. m., were met at the train by the reception committee of the Duluth local, and escorted to the Hotel St. Louis, where headquarters were established.

The morning session of the 23d was somewhat delayed by the street parade of Ringling Bros'. circus, and, while this was not officially so stated, it was understood in well-informed circles that this special feature was added after the program was made up, and was for our special benefit.

The meeting was called to order at 10:45 a. m., with President Gray in the chair. The roll-call showed that all officers were present, and that every member of the association in the state, excepting three, was represented. This seemed to be a very creditable showing. A very interesting and enthusiastic session was held.

As the dinner hour approached, we were informed by the committee that between the hours of 1 and 5 o'clock we were expected to go with them, but just where they did not propose to tell. (Of course we all had the circus in mind, but the circus did not prove to be part of the program at this time.) We were first taken to the Waldorf Cafe, where an elaborate luncheon was served, the centerpiece being the Duluth trade-mark, planked white fish of "Superior" quality.

Emerging from the cafe, we were ushered aboard a tally-ho with six horses attached, and our party of twenty was driven through the principal parks and thoroughfares of the city, the most interesting part being the beautiful boulevard drive along the crest of the bluff far above the town, overlooking the whole city and the shipping in the harbor. This was a very enjoyable feature of the entertainment, and one long to be remembered by the visitors.

At the afternoon session the election of officers, which had been made a special order of business for this time, was taken up and the following officers elected: President, W. I. Gray, Minneapolis, Minn.; first vice-president, John Gorman, St. Paul, Minn.; second vice-president, Wm. Burgess, Duluth, Minn.; secretary, L. L. Sandford, Minneapolis, Minn.; treasurer, C. T. Nimis. St. Paul, Minn.

It was decided that each local organization should send one delegate to the National Association meeting in Philadelphia in July to represent its various members.

The invitation of the St. Paul local association to have the State Association meet with them at their next semi-annual meeting in January, 1903, was accepted. The business of the meeting having been concluded, a vote of thanks was tendered the Duluth local association for the very courteous manner in which we had been treated, and for the splendid entertainment furnished us.

In the evening an informal dinner was given in the private dining-room at the Hotel Spaulding, Duluth's most prominent hostelry, by the Duluth Association to the visiting delegates and invited guests, among whom were representatives of several prominent electrical supply houses.

Covers were laid for twenty-four, and an elaborate menu was served, consisting of more trade-marks and all the other good things to go with it that would suit the taste of the most fastidious epicure. After the dinner and while enjoying their Havanas, speeches were made all around and a very enjoyable evening was spent.

Harmony and general good feeling seemed to prevail, and it is to be hoped that as a result of these gatherings the electrical trades will be brought closer together, and that the electrical business, as a whole, will at no distant day be placed on the same plane and on the same basis as other business of like magnitude.

Hastings, Neb.—The Adams County Telephone Company has filed articles of incorporation; capital, $30,000. The officers are J. N. Lyman, president; A. L. Clarke, Jacob Bernhart, W. H. Ferguson, Geo. B. Tyler, C. H. Dietrich, J. N. Lyman and W. H Waldron The incorporators are Jacob Bernhardt, A. L. Clarke, J. N. Lyman, W. H. Ferguson, W. H. Lanning, G. J. Evans, W. H. Waldron and C. W. Stewart.

Digitized by Google

TELEPHONE COMPANY ENJOINED.

Leon B. Robinson, a druggist, at 2145 Pennsylvania avenue, filed a bill for an injunction yesterday in Circuit Court No. 2 to restrain the Maryland Telephone and Telegraph Company of this city from removing the telephone now in his premises, or from disconnecting his 'phone from the exchange or in any way interfering with his service. Judge Dennis signed an order for the injunction to issue upon the complainant filing a bond for $500.

The plaintiff claimed he contracted for a telephone service for one year, and that he has paid up for the quarter ending September 30th next. It is alleged by Mr. Robinson that the company now refuses to supply him with any service except that of a pay station, and is unlawfully discriminating against him. It is stated that the company presented him with a contract for a pay station July 12th last, which he refused to sign, and his service was discontinued. Attorney Martin Lehmeyer filed the bill for the plaintiff.—*Baltimore Herald.*

THE TELEPHONE AS A SURGICAL INSTRUMENT.

From the Scientific American.

According to a London medical journal, several London hospital surgeons are now using the telephone, whenever they have occasion to probe for bullets, or other metallic objects embedded in the body of a person. The receiver of the telephone is placed on the head of the operator, and the patient is placed in the usual manner, in contact with a plate; the general medium being a wet sponge or some paper saturated with a saline solution, which is spread over the plate. The latter is connected with a telephone by wire, and the probe after it has been introduced into the body vibrates as soon as the foreign metallic substance comes in contact with it. The probe is also connected with the telephone by a wire, and thus no such blunder is possible as sometime happens when an ordinary battery is used. When a telephone is used in this way, the plate acts as one pole and the probe as the other. Needles, bullets, grains of shot, and pieces of steel and copper have been easily located by use of this simple method. The only instances when the telephone does not work satisfactorily are when the objects to be located are of the same metal as the probe. French and German surgeons have been following these experiments in London. with the intention of introducing the same method into the hospitals of Berlin and Paris.

FIGHTING ANOTHER TRUST.

Independent Telephone Companies After the Electrical Supply Combine.

President Roosevelt and Attorney-General Knox have another opportunity to havé a tilt at the trusts. The Independent Telephone Association wants the government to go after the electrical supply dealers and manufacturers. It is claimed they have boosted prices 50 per cent higher than the normal. Conspiracy, boycotting, intimidation and discrimination are charged. Strong resolutions were passed by the "independents" and forwarded to Washington. The latter promise to furnish all the evidence needed to convict the trust.—*Chicago Journal.*

The Whitewright Telephone Company of Whitewright, Tex., has been incorporated; capital stock, $10,000. Purpose, to conduct a system of telephone lines in the counties of Grayson, Mannin, Collin and Hunt. Incorporators, J. C. Fair, R. May and Lille Selph.

* * *

Farmers' Telephone Company of High, Lamar County, Tex., has been incorporated; capital stock, $7,000. The purpose of this corporation is to operate a telephone line from High to the villages of Roxton, Brookton and Petty. The incorporators are McD. High, Fred Roach and D. W. Price.

* * *

Cleburne and Bono Telephone Company of Cleburne, Tex., has been incorporated; capital stock, $1,000. Purpose, to construct and maintain a telephone line from Cleburne through Bono to the ranch headquarters of J. H. Mims, M. L. Kenard, T. J. Honea and J. B. Landers and other homes in Johnson and Somervell counties. Incorporators, J. H. Mims, T. J. Honea and J. B. Landers.

Digitized by Google

MONTHLY DIGEST OF TELEPHONE AND KINDRED PATENTS.

EDITED BY ARTHUR F. DURAND, OF THE CHICAGO BAR.

Copies may be had, postage paid, by enclosing 5 cents for each one. Address inquiries in care of this magazine or to the Commissioner of Patents, Washington, D. C.

Frank B. Cook, Chicago, Ill. No. 704,439, July 8, 1902. Thermal Protector for Electric Circuits.

This is a very interesting patent. The application was filed in 1896, and several hundred thousand of the devices are already in use by the different telephone companies throughout the United States. It also has been introduced to a more limited extent in several foreign countries.

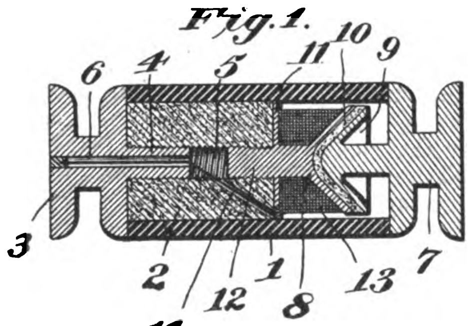

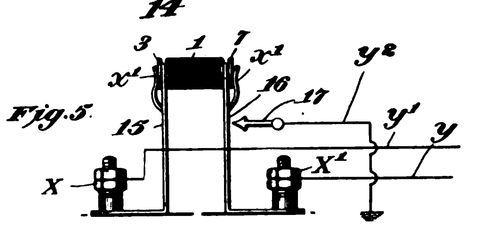

704,439—Thermal Protector for Electric Circuits.

The application for this invention was in interference for several years, which partially accounts for the long delay in issuing the patent. The interference was between Mr. Cook's application and the McBerty patent, owned by the Western Electric Company, and was bitterly contested for nearly four years. The record in the case shows four decisions in Mr. Cook's favor by the different tribunals, the last one being rendered by the United States Court of Appeals. It also appears that Mr. Cook made the invention in 1891, but was prevented from applying for a patent by reason of a contract with a large operating Bell Telephone Company.

Some of the claims in this patent are very broad. For example, there are claims which cover broadly a separable conductor, a heat-concentrating member, a connection arranged to give way under the influence of the heat generated by the heat-concentrating member, and a spring switch, all connected in series in the circuit. This appears to be an advantageous construction and organization of the different parts, inasmuch as it admits of the use of a coil of wire, a piece of carbon or other heat-concentrating member, which does not necessarily break when the device is operated.

In the drawings, 1 indicates a shell of insulating material, and 2 indicates an internally arranged sleeve of insulating material.

At one end the cylindric heat-coil device is provided with a head 3 having a stem 4 screwed into the sleeve 2, and at the other end the head 7 has a cone-shaped portion 9 adapated to fit into a socket in the end of the spool-shaped part 8. The parts 7-8 are held together by the solder 10. A heat coil 13 is mounted on the spool-shaped member 8. One terminal of this heat coil is soldered to the head 3, and the other terminal is soldered to the back of the concave socket at the end of the conductor section 8. A pair of springs 15 and 16 are provided with end portions adapted to receive the grooved heads of the cylindric heat-coil device. The spring 16 is adapted to serve as a switch for closing the connection to ground through the stop 17 and the ground connection y^2. In this way, an abnormally large current traversing the circuit will cause the heat coil to fuse the solder, allowing the conductor sections 7 and 8 to separate, so as to produce a gap in the circuit, and at the same time the spring switch will automatically establish the connection to earth.

Digitized by Google

FRANK LEO TUFTS, NEW YORK CITY. No. 704,986, July 15, 1902. TELEPHONE BOOTH.

The booth covered by this patent is made cylindric in form to prevent the transmission of sound through the walls. Mr. Tufts states that with a booth of this construction the walls can be made very thin without danger of the sound being transmitted through the walls. The drawings show several forms of the invention, and the claims, with two exceptions, are all drawn to cover a group of booths having curved walls. In figures 3 and 4, each booth is provided with a sliding door, which is curved to conform to the curvature of the cylindric booth. In figure 5 the booths have flat outer walls and flat doors, only certain portions of the inner walls being curved. With a group of booths of this form, it is claimed that the talking in one booth cannot be heard in the next, even though the construction be comparatively cheap, and notwithstanding the walls being very thin.

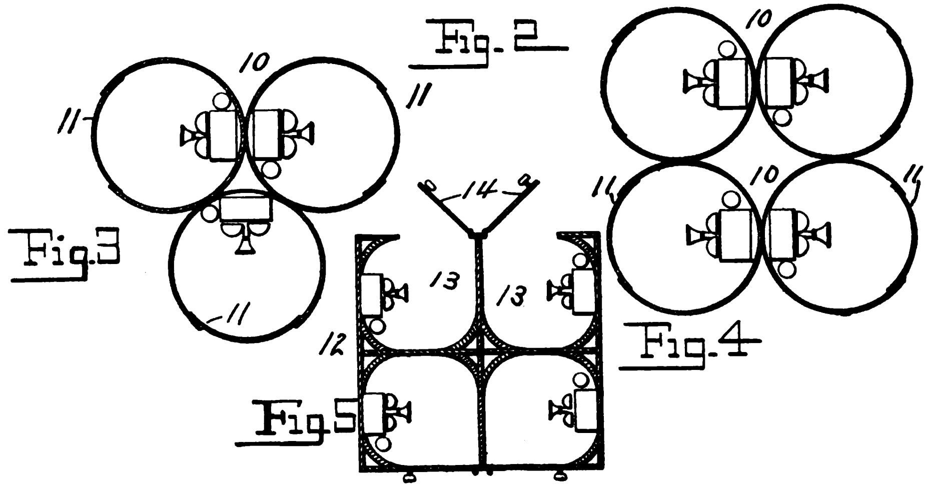

704,986—Telephone Booth.

FRANK LEO TUFTS, NEW YORK CITY. No. 704,987, July 15, 1902. TELEPHONE BOOTH.

This is merely an improvement upon the booth shown in Mr. Tufts' other patent. In this case, he proposes to construct the booth with inner and outer walls. The inner walls are curved, as in the other patent, while the outer walls are flat. Mr. Tufts states that he has experimented considerably with booths of this kind, and finds that the combination of inner curved walls and outer flat walls practically precludes all possibility of sound being transmitted from one booth to the other. The flat outer wall is provided with a swinging door, while the cylindric inner cell is provided with an inner sliding door, curved to conform to the curvature of the cylinder, as in the other patent.

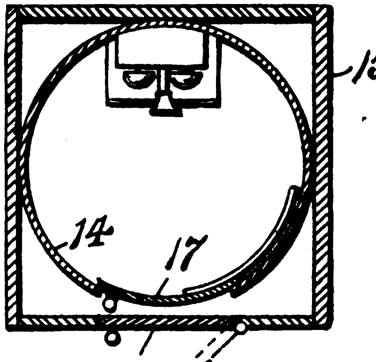

704,987—Telephone Booth.

WILLIAM W. DEAN, CHICAGO, ILL. No. 704,697, July 15, 1902. TELEPHONE HOOK SWITCH.

The patent illustrates two forms of the invention. In the form shown both the lifting springs and the switch springs

Digitized by Google

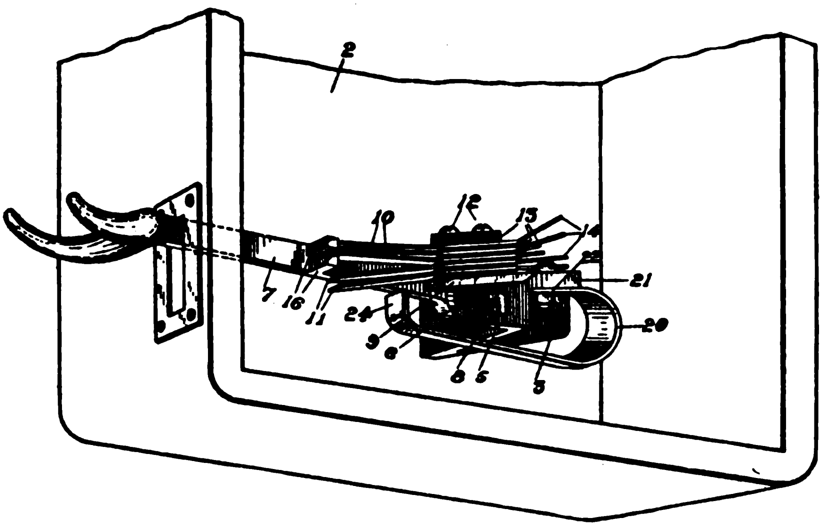

704,697—Telephone Hook Switch.

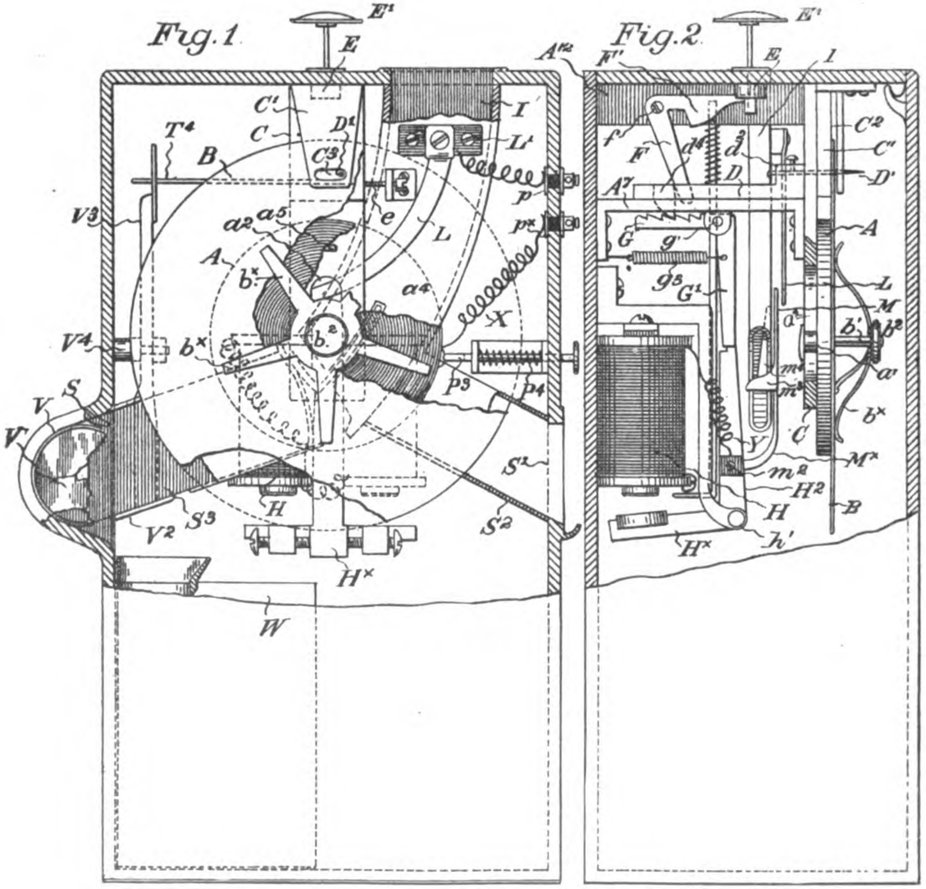

Reissue No. 12,015—Toll Collecting and Call Recording Device for Telephone Systems.

Digitized by Google

are, together with the hook lever, all mounted upon a single plate or support. The switch springs are separated by pieces of insulation and are directly engaged by the hook lever. In the drawings, the switch springs 10 and 11 are separated by strips of insulation 13, and are mounted at the side of the hook lever 7. The middle or controlling spring 17 is engaged directly by the lugs 16 on the hook lever. The lifting spring 20 is secured to the casting 3, upon which all the elements are mounted, and is bent downwardly and around, in order that its end portion 24 may engage the under side of the lever.

This patent is assigned to the Kellogg Switchboard & Supply Co., of Chicago, Illinois.

JAMES B. GILL, SAN FRANCISCO, CAL. Reissue No. 12,015, July 22, 1902. TOLL-COLLECTING AND CALL-RECORDING DEVICE FOR TELEPHONE SYSTEMS.

This is a reissue of Mr. Gill's previous patent, which is dated October 24, 1899, numbered 635,378. The application for reissue was filed September 6, 1900.

In the patent there are a number of drawings showing the various parts and details of construction. There are also quite a number of claims.

After the coin is inserted in the box and the push-button is pressed down and released, the coin drops into the lower part of the chute, where by contact with the wedge m^4 it throws the spring M against the spring L. The same movement of the push-button sets back the slide D ready for action, and the magnet-circuit being closed at L M by the coin, the lever G′ will trip the ratchet that holds back the slide as soon as the operator at the central office throws the battery on the magnet H. By that operation the needle is projected against the record-card and a permanent record is made thereon. In this movement the lateral throw of the slide D causes the disk B to turn on its center a short distance, according to the length of the lateral throw made by the needle. At the time of each punctuation, therefore, the disk is turned a fraction of a complete rotation on its axis. When the push-button E′ is pressed down again, the slide is drawn back and set for the next operation. In that movement the needle is withdrawn from the card without turning it, as the amount of penetration is only sufficient to cause the needle to engage the card sufficiently to turn it, and the resistance of the fixed pin that engages the spiral is sufficient to hold the card from being turned back by the retraction of the needle.

Fig. 8.

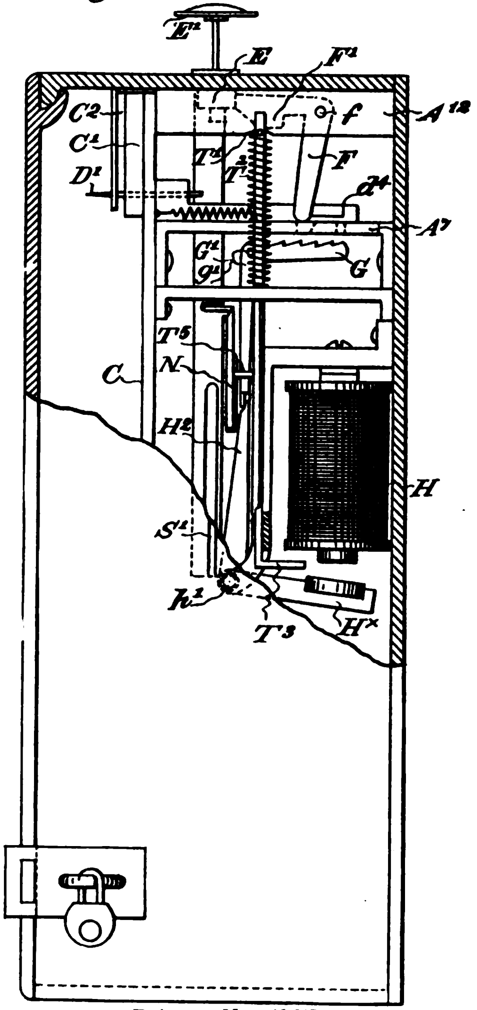

Reissue No. 12,015.

A relatively small disk can be made to contain a considerable number of record-marks by giving the disk an upward movement in a vertical plane in addition to its rotative movement, as already described, so that the line of punctures made by the needle will run in a continuous spiral line, beginning at the circumference and decreasing in size as it runs

Digitized by Google

toward the center. In this operation also the necessary coin to pay for the switch is retained in the chute until the operator is ready to give the required connection with the other subscriber and is released by the movement of the armature-lever that is connected with the recording device.

Provision is made for insuring the proper movement of the incline m^4 in the case of a coin of light weight that is not sufficiently heavy to act properly on the incline. In such a case a lever N, attached to the back of the chute on a pivot

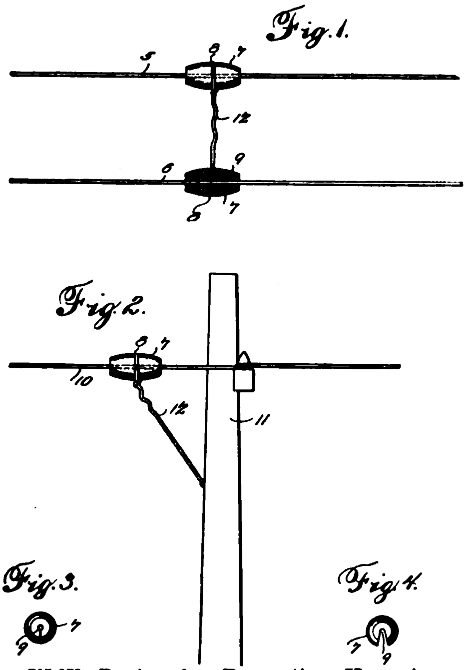

705,073—Device for Preventing Humming on Telephone Wires.

$n^\times$, is provided with an upright member, in the end of which is a pin n^2, sitting horizontally across and extending through a slot I^2 in the coin-chute, so as to lie across the coin-passage, and with an angular member n^3, projecting in the path of a pin T^5 in the push-rod T. In the downward movement of the rod the stop T^5, engaging this end of the lever, will throw the opposite end in the slot I^2 against the edge of the coin lying in the coin-passage with a sufficient degree of pressure from above to press the coin against the incline m^4, and thereby force the same outward. This attachment is designed to be used only in cases where coins of light weight may be dropped in the box, and under all other conditions it may be dispensed with.

MASON GROVER, BIDWELL, OHIO. No. 705,073, July 22, 1902. DEVICE FOR PREVENTING HUMMING OF TELEPHONE WIRES.

In the drawings, figure 1 shows the application of the invention to parallel wires, while figure 2 shows it applied to a single wire. The scheme consists merely in mounting a block of rubber on each wire.

Each device consists of a body 7 of rubber, which is tapered from its central portion toward both ends, and midway of the ends of which is formed the exterior peripheral groove 8. A cylindrical pas-

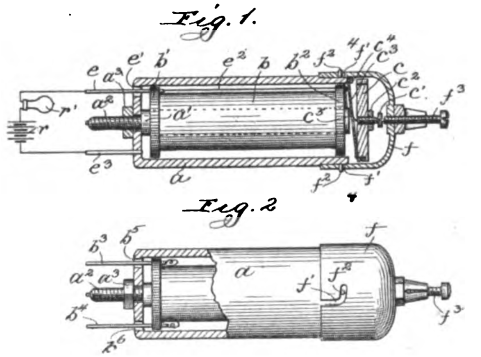

705,092—Suverisory Relay.

sage 9 is formed axially through the body 7, and the body is split in a plane including the axis and from the central bore of the body outwardly through the exterior surface, so that the body may be readily applied over a wire, so that the latter will lie in the central passage thereof. When the body 7 has been thus disposed upon a wire, a piece of wire is passed around it and engaged with the peripheral groove thereof and is twisted together to hold it in place, the loop thus formed in the attaching-wire being reduced in diameter to such a point as to close the body 7 and cause the inner surface thereof to tightly impinge the wire upon which it is placed, so that displacement thereof will be presented longitudinally of such wire. Where two of these devices are employed upon mutually-adjacent wires 5 and 6, a single attaching-wire is employed, as shown, and the ends thereof are engaged with the grooves of the separate devices.

Digitized by Google

WILLIAM KAISLING, CHICAGO, ILL. No. 705,092, July 22, 1902. SUPERVISORY RELAY.

In this relay the magnet a is enclosed by the shell b, and a cap f is fitted upon the end of the shell. The armature c is arranged within the chamber provided by this cap, and is mounted upon the lower end of the spring c^3, which latter has its upper end secured to the shell or casing. With this arrangement, the armature can have a bodily movement toward and away from the magnet in a horizontal line. The spring-contact d^3 is operated by the end of the screw c^1 when the armature is attracted.

This patent is assigned to the Kellogg Switchboard & Supply Co., of Chicago, Illinois.

THE THOMAS A. EDISON STORAGE BATTERY.

H. C. DODGE.

This is one of the latest and greatest triumphs of the inventor.

It now appears that Mr. Edison has consummated the perfection of his Storage Battery, upon which he has been working with tireless efforts for some years past. His invention consists in making a battery employing nickel and steel instead of lead and zinc.

In the ordinary storage battery the heavy metals, lead and zinc, are acted upon by sulphuric acid, and its action causes comparatively rapid disintegration, and a tendency of the plates to buckle or bend is developed. With the Edison battery are employed cakes or briquettes resembling stove polish in appearance; each cake is 3 inches long x 1½ inches wide. One lot of cakes is composed of nickel and graphite. The graphite in the cakes undergoes no chemical change and is employed to stimulate chemical action.

The nickel briquettes constitute the Positive Pole of the battery and the one of iron the Negative Pole. These briquettes are made by certain chemical processes known only to Mr. Edison; they are placed in light steel boxes, which boxes are mounted in frames, each frame holding 20 briquettes.

The steel covering of the briquettes is submitted to a pressure of some 100 tons, this pressure bringing the briquettes in close contact with the covers which are perforated. When the frames holding the briquettes are placed in a potash solution which is employed, their substance is quickly acted upon by this solution, and the chemical action that creates the electrical current is brought about.

The Edison battery, it is claimed, will do 2½ times as much work, weight for weight, as the ordinary storage battery.

Another feature of particular merit consists in the inherent qualities which allow of its being immediately recharged after exhaustion without loss of efficiency.

The cheapness of the Edison battery is a point which the inventor particularly emphasizes.

FRANK B. COOK.

Mr. Frank B. Cook, the well-known Electrical and Telephone Engineer, whose many inventions and improvements in the telephone field long ago placed him in the foremost rank of inventors, is once more with us in Chicago, where he has in operation the most complete and thoroughly equipped plant for the manufacture of telephone accessories in the world.

Some days ago Mr. Cook left for Los Angeles, California, and an extended trip through the West on business and pleasure combined. While in the West Mr. Cook expects to look over the Independent telephone field, returning by the way of Portland, Oregon, and arriving in Chicago about the first of September.

The Bridgeton, Mansfield and Diamond Co-Operative Telephone Company of Bridgeton, Ind.; Capital stock, $1,000. Directors, Lee Mitchell, Oscar Cole, Elmer Welch, Freeman Seller, J. B. Garrigus, W. A. Smith and Ambrose Bramblet.

* * *

Spiceland, Ind.—The Spiceland Co-Operative Telephone Company has been organized with a capital stock of $10,000. Nathan Foster is president, J. T. Unthank secretary and treasurer.

* * *

The Blakesburg Telegraph and Telephone Company of Wapello County, Ia., has filed articles of incorporation; capital, $3,000. Herman Snow president, William Walter vice president and Franz Abegg secretary.

Digitized by Google

Telephone Magazine

An Illustrated Independent Journal.

MEDINAH BUILDING,

TEL. HAR. 4148. **CHICAGO**

Published on the 15th day of each month.

C. E. KAMMEYER, Publisher.

SUBSCRIPTION

One year, United States and Canada	$1 00
One year, foreign countries	1 50
Single copies	10

COPYRIGHT

The title and contents of this paper are covered by a general copyright. Permission from publishers must be obtained before any article or table is copied, or any illustration reproduced.

CHICAGO, AUGUST, 1902.

PROSPERITY VS. ADVERSITY.

By H. C. Dodge.

The Michigan Bell Telephone Company (whose securities, by the way, are held largely by Chicago investors), has defaulted on its July interest. The company announces that it has not in its treasury sufficient funds to meet the interest on its $5,000,000 consolidated mortgage, 5 per cent bonds, payment of which has fallen due. A committee headed by a firm of Chicago bankers has requested holders of these bonds to deposit them with a certain New York Trust Company, with a view of combining for the protection of all concerned. The mortgage securing the bonds provides for the sale of the property under foreclosure proceedings, after default for ninety days in payment of interest.

The "Natural Monopoly" in the State of Michigan bids fair to be one of the people controlled by the people for the people. The discussion of the Why and Wherefore of the success of the Independents and the Waterloo of the Bell is a most inviting subject, as evidenced by the large space devoted to this subject by some of our leading electrical journals in recent issues. In this comprehensive article it suffices to say that without considering the relative strength of the two factions, i. e., the Independents and the Bell, in the aggregate, or prognosticating as to the ultimate outcome of the fight between these for supremacy, the eventual defeat of the one or the other because of unfitness to meet existing conditions, the fact is patent to all having knowledge of the situation that in many of the most important sections of wide area embracing scores of important cities, towns, and villages, the *Independents* are most strongly intrenched, and not only have a much greater number of subscribers than their opponent now or ever did have, in cities where exchanges were operated by the old company in the days of its monopoly, but have extended lines into populous rural districts giving a much needed service to large communities of our people whom the Bell Company failed to show a disposition to accommodate; in short, the Independents are seemingly impregnably intrenched in such districts largely because they have labored in the interests of the people, making their service valuable, because of the large number of connections afforded subscribers to whom they have shown a spirit of accommodation and desire to please and are rendering fair service at satisfactory rates.

TRADE NOTE.

The contract for the entire mechanical and electrical equipment for the new plant at Philadelphia of the Crompton & Knowles Loom Works has been placed with Sargent, Conant & Co. of Boston. Power for the entire works will be transmitted and distributed electrically.

Digitized by Google

DURAND-MOREHOUSE.

The very many friends of Mr. Arthur Franklin Durand will be agreeably surprised to learn that he has entered the holy bonds of matrimony. The bride was Miss Edna Amelia Morehouse, the beautiful and accomplished daughter of Mr. and Mrs. Merritt Lorenzo Morehouse. The happy event took place at the home of the bride's parents in Chicago on Tuesday, August 5th, at high noon.

It was a small wedding. In addition to Mrs. Durand, the mother of the groom, who had come from St. Joe, Michigan, there were present the immediate friends of the family, who, with the invited friends, brought the number of guests up to about sixty.

The entire house had been beautifully decorated with flowers and evergreens for the occasion. After the ceremony a wedding dinner was served, the afternoon being spent in a most enjoyable manner by those present. The happy couple left at 6 o'clock in the evening on the Santa Fe for a sojourn of several weeks in Colorado, and will be at home after September 8th at 6146 Madison avenue, Chicago.

The Telephone Magazine extends congratulations and best wishes to Mr. and Mrs. Durand.

ARTHUR F. DURAND.

Mr. Arthur F. Durand, the subject of our sketch, is a promising young patent lawyer of this city, having offices in the Monadnock Building. He is a native of Michigan, his birthplace being near South Haven. He came to Chicago twelve years ago and at once entered the field of his chosen profession, taking up first the work of preparing Patent Office drawings with one of the largest firms in Chicago engaged in that business. He then became associated with Mr. Charles G. Page, one of Chicago's old patent practitioners, and after several years of association, the firm of Page & Durand was formed. Two or three years ago Mr. Durand left Mr. Page and took up independent practice, in which he has been eminently successful. He edits the Patent Digest of the Telephone Magazine.

THE HISTORY OF THE COOK PATENT.

Regarding the history of this patent, the records of the case show Mr. McBerty applied for a patent in 1893, which patent was assigned to the Western Electric company and issued in 1894. In July, 1896, Mr. Cook applied for a patent, and soon after asked that interference be declared with the McBerty patent. This request was granted by the patent office and in the records of the case which followed, it developed that Mr. Cook actually made the invention in 1891, and under the terms of a contract with the Bell company he submitted the invention to them, together with full detailed drawings in 1892. Within a few months thereafter, the invention was accepted by the Bell company and Mr. Cook was told to be prepared to go before their attorneys and make application for patents. However, nothing was done until 1895 when Mr. Cook was informed that he would have to re-submit his invention. This he did, and within a very short time thereafter very much to his surprise and pleasure, the invention was rejected by the Bell authorities, although at the very time of its rejection they were preparing to put large numbers of them in use. Mr. Cook kept his own counsel and July, 1896, he filed application for a patent in his own name. When the attention of the Bell company was called to the patent by the interference, they at once prepared for a vigorous fight to retain their own patent and knock out Mr. Cook's. Much testimony was introduced, but Mr. Cook was able to produce such strong documentary evidence to corroborate the testimony of his witnesses that the courts decided every point in his favor as against the Bell company. The Bell company appealed three times until the case finally reached the United States court of appeals for the District of Columbia, which is the highest court before which the case could be brought. The decision of this court of appeals was the same as previous decisions in Mr. Cook's favor.

Digitized by Google

The patent as originally filed was ordered sub-divided by the patent office into five separate and distinct patents, and patent No. 704,439 of July 8th, 1892, is the only one of the five which has yet been issued; the others are still in the patent office and cover other portions of Cook's Protective System as thoroughly as this heat coil patent covers that portion. During the years which these patents have been held up by the patent office, there have been many patents for protectors which have been issued. Mr. Cook claims that many of these patents so issued will infringe the patents which he already has and others will infringe those which are still in the patent office.

It should be understood that the date of application or invention of a patent are as important in cases of infringement as the date the patent is issued.

A FEW OF THE FEATURES OF THE DIGEST OF TELEPHONE PATENTS.

As stated in our last issue, the Digest of all United States Patents for Telephones from 1789 to January, 1902, compiled by James T. Allen, Examiner of the United States Patent Office, and published by the American Patents Publishing Company, would be issued provided sufficient subscriptions could be received to warrant its production, since which announcement a number of inquiries have been received, which manifests an interest to such an extent that the said publishing company has finally decided to issue the said Digest.

While the publication will arrange chronologically all of the patents issued in telephones, it will do even a great deal more. It will give every drawing, every sheet and figure of the drawing of an invention for which a telephone patent has been issued, so that the searcher can see the device from all sides and all its details, thus being able to obtain a complete and comprehensive grasp of the character and purposes of the invention. The patents are so arranged that the worker in any particular branch pertaining to telephony can easily trace its mechanical development and see what has been done in all lines. The list of all references pertaining to patents noted is given; something available to the public nowhere else except by securing an expensive expert search. It will furnish, ready at hand, an epitomized and fully illustrated history of each patent and shows how its scope is limited, and what were the decisions and restrictions, if any. It provides a complete reference index whereby everything in the patent line relating to any branch of the work can be brought together and compared. This index in itself will involve an immense amount of labor, because it is made to cover not only the description, but the plate drawings. It will show the probable validity of patents. It will show if any particular device has been patented. It will indicate on what lines competing manufacturers and inventors are working. It will show if there are any new improvements covered by patents. It will show whether any patent has become public property by reason of the expiration of its term. It will show everything as to trade-marks and designs relating to telephony. In other words, it will be a complete encyclopedia of the art of telephony, beginning with the inception of the patent system and running to the first of this year. The Telephone Magazine will be pleased to receive further inquiries on this subject, and those who desire to insure receiving a copy of this publication should communicate at once, as the edition will be limited.

TUNBRIDGE WELLS TELEPHONES.

Up to the present neither side in the fight between the rival telephone interests in the Tunbridge Wells district is tired of the newspaper war which has raged since the opening of the municipal exchange. The condition, however, has become so serious that the local papers have taken sides, and the supporters of the municipal undertaking will only send their letters to one particular organ. In the same way the longer and more heated remarks of the supporters of the National Telephone Company all appear in the paper which editorially condemns the Corporation's telephone undertaking. We do not think, however, that the heat displayed in these letters is felt by the majority of the telephone users. The result to these has been that they can now obtan a telephone service from both of the telephone exchanges at only a slight in-

Digitized by Google

crease of cost over that which the National Telephone Company used to charge. They have also the advantage that the National Telephone Company have greatly improved the whole of their system, so that they have now two good telephone systems available, whereas before the Corporation commenced working they could only obtain connection to a single inferior system with few subscribers. This advantage of competition is quietly enjoyed by the inhabitants of the Tunbridge Wells district, while the few interested individuals, or those who like to see their names at the end of long letters in the Press, continue to waste their energy and time. The question as to whether the Corporation will have eventually a small balance on the right side after providing for depreciation is not the burning question these correspondents infer, as it is obvious that the Corporation cannot afford to shut down their exchanges and lose the capital invested any more than the National Telephone Company can afford to give the service they are doing at the present rates.—*London Electrical Engineer.*

NOTICE OF CHANGE OF ARTICLES OF INCORPORATION.

To WHOM IT MAY CONCERN:

Notice is hereby given that at a special meeting of the stockholders of the Ida County Telephone Company held at the town hall, Ida Grove, Iowa, on Friday, July 18, 1902, at 3 o'clock p. m., said meeting having been held pursuant to call duly made by the Secretary of said company for the purpose of changing and amending the Articles of Incorporation thereof, the said Articles were amended in manner and form as follows: Article Three (3) was changed and amended to read as follows:

"The amount of authorized capital of the said Corporation shall be the sum of Fifty Thousand Dollars to be divided into shares of Twenty-five ($25.00) Dollars each; and all stock subscribed shall be paid for in full upon call of the Board of Directors. The shares of the capital stock shall be transferred on the books of the Corporation only, but no shares of stock shall be issued o: transferred to any one already holding forty shaies of the stock of this association."

Article Seven (7) was changed and amended to read as follows:

"The highest amount of Indebtedness to which this Corporation is at any time to subject itself shall not exceed twc thirds (2-3) of the amount of capital stock actually paid in, and the Board of Directors of the Corporation are hereby authorized and empowered to mortgage the property of the Corporation, both real and personal, to secure any indebtedness of said Corporation not in excess of two-thirds of its capital stock actually paid in."

Done by authority and direction of the stockholders of the Ida County Telephone Company this 23d day of July, A. D. 1902, at Ida Grove, Iowa.

IDA COUNTY TELEPHONE COMPANY.
By J. E. CONN, President.
By FRED BRASTED, Secretary.

TELEPHONE VALUATIONS IN IOWA.

FROM THE DES MOINES NEWS, AUG. 4TH.

Secretary Davidson of the Executive Council is busy to-day sending out to the county auditors the certificates of assessment of various kinds. The certificates on telephones go out this week. The assessment of the telephone and telegraph companies shows that many of the telephone companies of Iowa now have property that is quite valuable. The Iowa Telephone Company—the one which is now fighting the unions—is the only telephone company valued over a million. The following are telephone valuations in Iowa over $15,000, as fixed by the council:

Iowa Telephone Company	$1,010,496
Cedar Valley Telephone Company	96,635
Mutual Telephone Company, Des Moines	87,250
Dubuque Telephone Company	70,000
Greene and Western Telephone Company, Mason City	64,000
Western Electric Telephone Company	58,500
Missouri Valley Telephone Company	59,265
American Telephone and Telegraph Company	51,940
Boone County	47,420
Fort Dodge	44,000
Hawkeye and Belle Plains	44,150
Nebraska Telephone Company	40,990
Ottumwa	53,137
Vinton and Benton	35,000
New State Telephone and Telegraph	33,000
Hawkeye of Perry	34,446
City Telephone Company, Tabor	32,500
Interstate Telephone Company, Dubuque	30,000
Johnson County	28,587
Marshal Telephone Company	27,240
Oskaloosa Home	26,600
Nevada Mutual	21,650
Sumner Telephone Company	21,580
Northern Iowa	20,000
Northern, of Fonda	20,175

Digitized by Google

E. H. Martin Telephone Company	21,000
Maquoketa	22,400
Linn County	22,400
Creston Mutual	24,750
Interstate of Grinnell	24,000
Jasper County	24,600
Knoxville Electric Company	21,045
Central, of Rockwell City	19,910
Musson Brothers' Telephone Company	18,225
Jefferson County	15,440
Lineville	15,855
Seymour	15,860
Southern Iowa	15,500
Tri-City	16,875

TRADE NOTE.

The McDermid Manufacturing company, the pioneer manufacturers of wire and cords for the Independents, report a very gratifying increase in orders for switchboad cords, silk cordage and magnet wire.

BUSINESS ITEM.

Last month The Federal Manufacturing Company's (formerly The Automobile and Cycle Parts Company) chief executive officers, managers and salesmen met in the annual convention at the Cleveland main office, and in the work transacted emphasis was again given to the value of such gatherings.

A LARGE TELEPHONE CONTRACT.

A competitive telephone test, over 400 miles of long distance telephone lines, conducted by Wilbur H. Johnston, chief engineer of the Frontier Telephone Co., Buffalo, was recently held at Scranton, Pa.

The result of this test was so satisfactory as to warrant the above company immediately placing an order with the Kellogg Switchboard & Supply Company for 6,000 telephones complete.

The Kellogg transmitters have been tested on lines up to 1,500 miles and found to be perfectly satisfactory and superior to the "Bell Solid Back."

The S. S. S. Telephone Company of Stroud, Kas., has been chartered for twenty years. The capital stock is $2,000 and the purpose of the company is to build lines in Oklahoma and Indian territory. The incorporators are Ezra Brown, Stroud; Jas. F. Noble, Shawnee; Eugene Norris, Roff, I. T.; Jno. A. Meinecke, and Horace M. Jarrett, Stroud; D. McKinstry, Perry.

TELEPHONE NEWS.

York, Neb.—The Bancroft Independent Telephone Company has filed articles of incorporation at West Point. The capital stock authorized is $1,500,000. This makes two independent companies now in existence in that county.

* * *

Louisville, Ky.—The Western Kentucky and Calloway County Telephone System have been sold to the Cumberland Telephone and Telegraph Company. The price paid for the two systems was $38,000, the Calloway System bringing $6,800.

* * *

Guthrie, O. T.—The Western Telephone Extension Company of Sayre has been incorporated for a term of twenty years to do a general telephone business. The amount of capital stock is $40,000. The incorporators are G. A. Patterson, W. R. Roach, J. G. Rees, V. J. W. Adair.

* * *

Articles of association of the Locke (Mich.) Mutual Telephone Company have been filed with the secretary of state. The company is capitalized at $10,000, and its place of business will be Locke Center, Mich. The incorporators are G. A. Williams, G. E. Spaulding, Andrew Tuttle and E. C. Potter of Williamston, F. A. Bunline and J. Bunline, Jr., Perry, and Andrew Liverance of Morrice.

* * *

The Cumberland Valley Telephone Company, recently formed by the consolidation of a number of Independent companies in Maryland, has been capitalized at $200,000. Connections will be made with a number of towns in the southern part of the Keystone State.

A FOURTH EXCHANGE FOR THE KEYSTONE TELEPHONE SYSTEM.

The Kellogg Switchboard & Supply Co. has just closed a contract with the Keystone Telephone Co., Philadelphia, Pa., for a switchboard for its Fourth District Exchange of 7,200 lines ultimate capacity, 3,420 lines present equipment. Included in this contract is all necessary power apparatus, distributing frames, sneak current and lightning arresters. This exchange will be complete in all its details and embody the latest improvements.

Digitized by Google

NEW WESTON INSTRUMENTS.

The Weston Electrical Instrument Company of Newark, N. J., the pioneer manufacturer of electrical measuring and indicating instruments, has recently issued a series of bulletins, which represent an entirely new product and an article illustrating and describing the principal types will no doubt be interesting to our readers.

From the series of bulletins we have selected those that are especially applicable and useful in the electrical and telephone fields. The Portable Type E Direct Current Instrument is shown in the accompanying illustration.

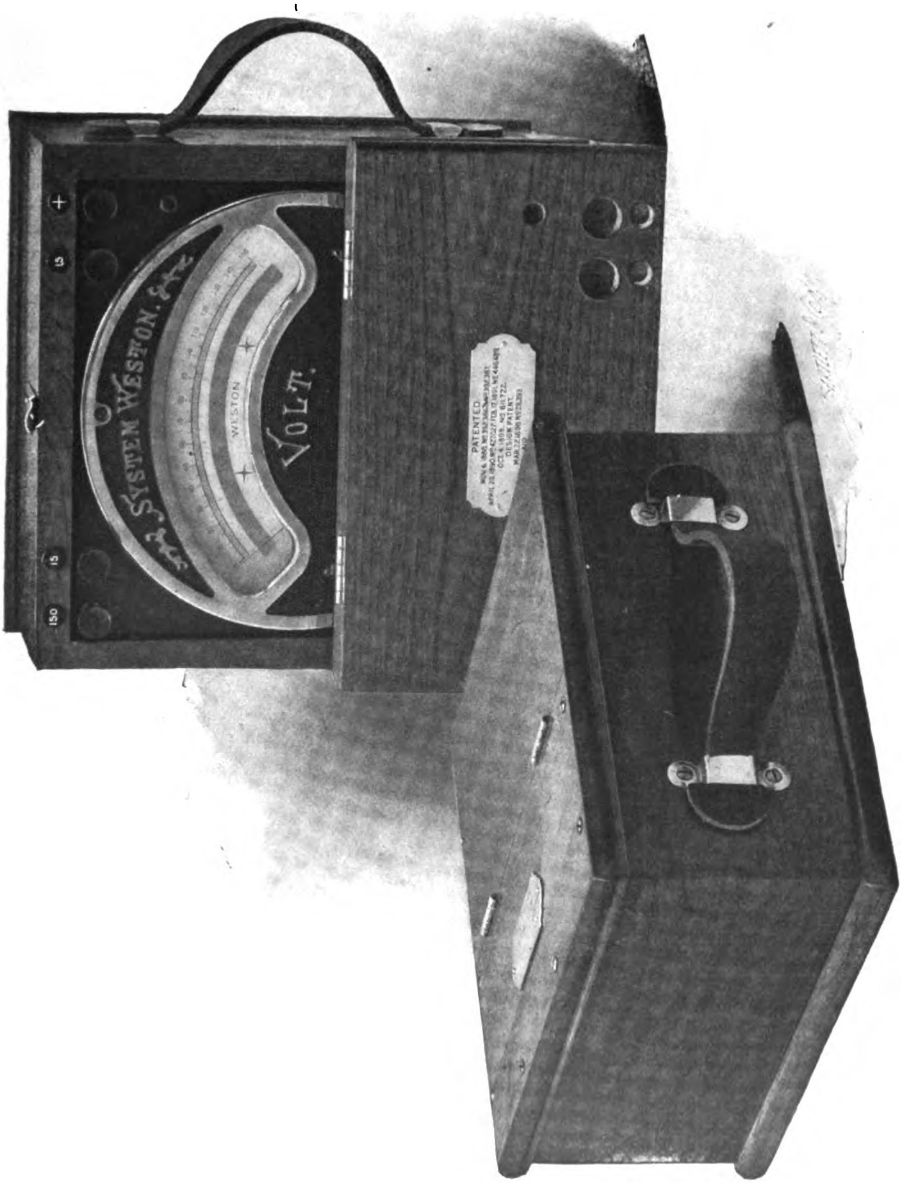

Portable Type E Rirect-Current Instruments.

This type of instrument, the company says, is adapted for use in many circumstances where tests are to be made, but where the extreme accuracy which obtains

in their portable standard instruments is not necessary or desired.

They are suitable for use in institutions of learning, and are specially serviceable in central stations, where stray magnetic fields exist, as the instrument proper is enclosed in an iron case which forms a shield against external magnetic influences, although care should be exercised not to subject the instrument to powerful magnetic fields which would permanently magnetize the iron case.

The accuracy will be found sufficient to enable employes of central stations to check up their switchboard instruments, and in general testing, and the prices are so reasonable that any one having occasion to make electrical measurements need not be without a reliable instrument for the purpose.

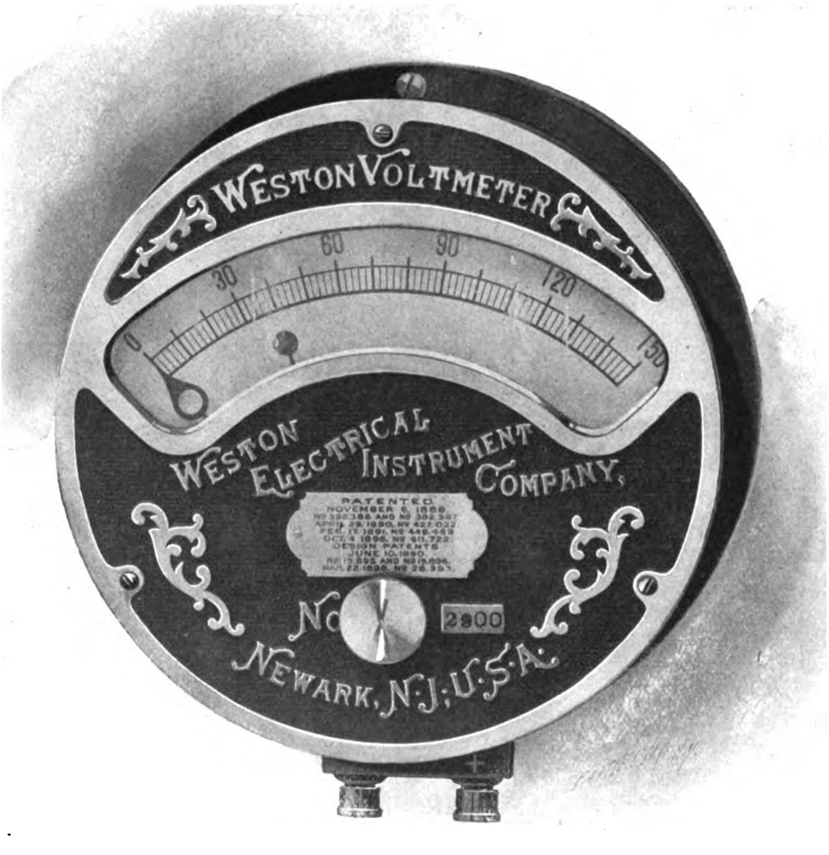

Station Type K Direct-Current Voltmeter.

Our next illustrations show the Station Type K Direct Current Instruments, which are cheap but good instruments for use in isolated plants and where space is limited.

These small round pattern instruments have been expressly designed to meet the demand for good but low-priced instruments for use on small switchboards, such as are installed in connection with small isolated plants, for lighting, power and other purposes, or for telephone, telegraph and other service, where a small instrument fully meets all the requirements. They are the same in general construction and appearance as their well-known round

Digitized by Google

pattern Type F instruments, which are so extensively used throughout the entire civilized world, but these new instruments are much smaller than the Type F, and are therefore better suited for small switchboards, or for use in places where space is limited.

The company also claims that the instruments are infinitely better made than any other cheap instrument on the market, and are carefully designed so as to secure the highest degree of durability and reliability, and economy of power in operation. They are absolutely dead-beat.

Their indications, with proper use, can be trusted to 1 per cent. The cases are well finished, and they are neat in appearance. The standard finish is black, japan and nickel, but these instruments will be made to order in any finish demanded at a slight advance in cost.

The Type K is not an untried instrument, for thousands of them are in daily use in all parts of the civilized world, and are giving perfect satisfaction and they are strongly recommended for the purposes mentioned.

In Fig. 1 is shown the Model R and T Duplex Instrument (direct current).

Self-Contained Ammeter.

These instruments are called "duplex" because they contain a voltmeter and an ammeter in one case. For some purposes this combination will be found much more useful than two instruments in separate cases. For instance, in many cases where practically simultaneous readings of current and potential difference are to be made, these instruments will be found

more convenient to use on account of the close proximity of the scales and indexes, and they will also be found specially useful in all cases where space is limited and compactness is a necessary or desirable feature. At present the company makes two models of this type of instrument, which are designated as R and T, respectively. Each has for some uses specially desirable features not found in the other.

to affect the working of the instrument. They are particularly suitable for use on electric vehicles on account of extreme lightness, compactness and freedom from danger of injury by water, snow, moisture or dust and dirt.

The Model T is well adapted for use in small isolated plants, and for all cases where the existence of powerful external fields would render it impossible to use where water or dampness would be likely

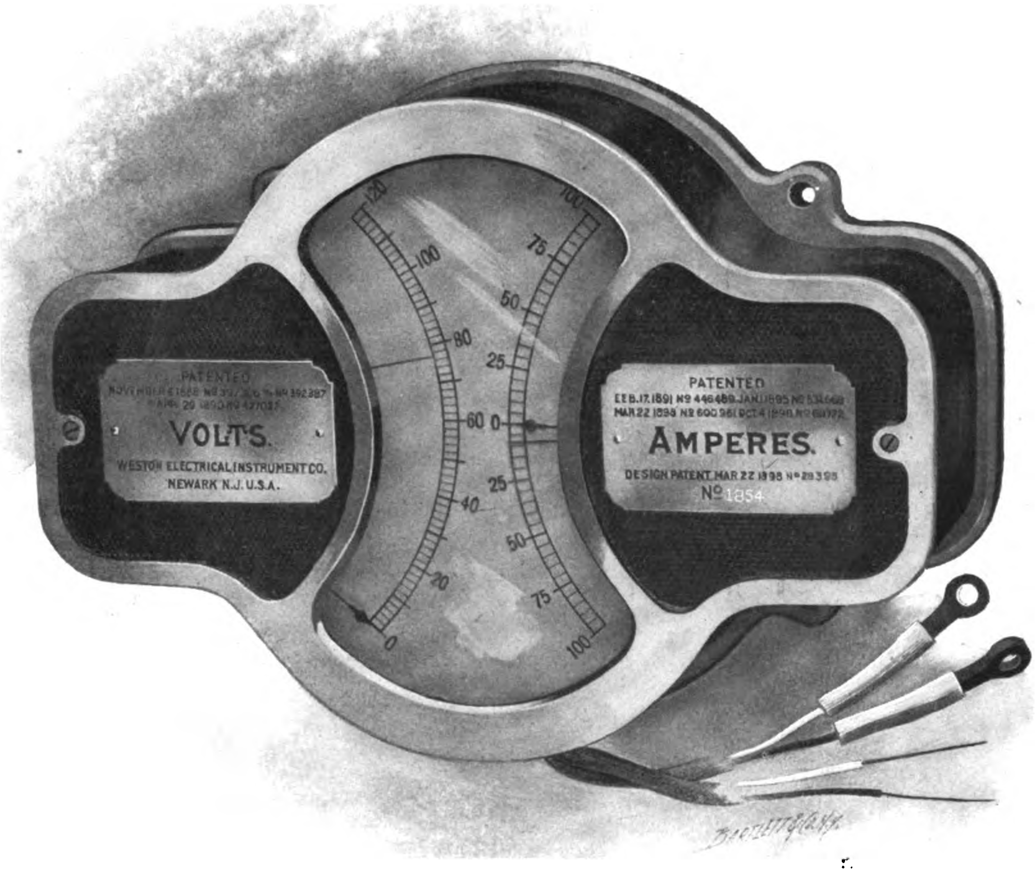

Fig. 1. Models R and T Duplex Instruments (Direct Current).

In the model R the two instruments are enclosed in a neatly designed and nicely finished *water-proof* aluminum case, which closely surrounds the operative parts of the instruments. The use of an aluminum case secures the minimum weight as well as much smaller size than is possible with Model T, and as the case is water-proof, this model is well adapted for outside use, where the instrument is exposed to the weather, or in other cases the R model. The function of the cast-iron case is to shield the instrument from external fields, and this it does in a most effectual manner. In both forms of instruments the workmanship is of the highest character, and the design and construction such as to insure great durability and accuracy. The bearings are made of highly polished sapphire, and the pivots hardened and accurately ground and highly polished. In this respect they are

Digitized by Google

similar to all of the company's instruments.

The working parts of this model are precisely the same as are used in Type R, except that the scale is larger, and consequently the divisions more open for the same range, than is the case with the R, and that the case is made of cast-iron, is *not water-proof,* and does not closely surround the working parts of the instrument. The difference in the size of the case and the material of which it is made, necessarily makes the T model much heavier than the R.

Aside from their adaptability to use on vehicles, these instruments are also particularly well adapted for use in all other cases where extreme vibration is met with, or where space is very limited, and lightness a desirable or necessary feature. These Model R instruments are not well suited for use in cases where powerful external magnetic fields exist, since such fields would disturb the accuracy of their indications. They are, however, exceedingly well adapted for use on small switchboards, and especially on motor-starter switchboards, where they will be found to render very valuable service in indicating the power used in driving single machines or groups of machines. The illustration shows one of the Models R and T in the company's shops.

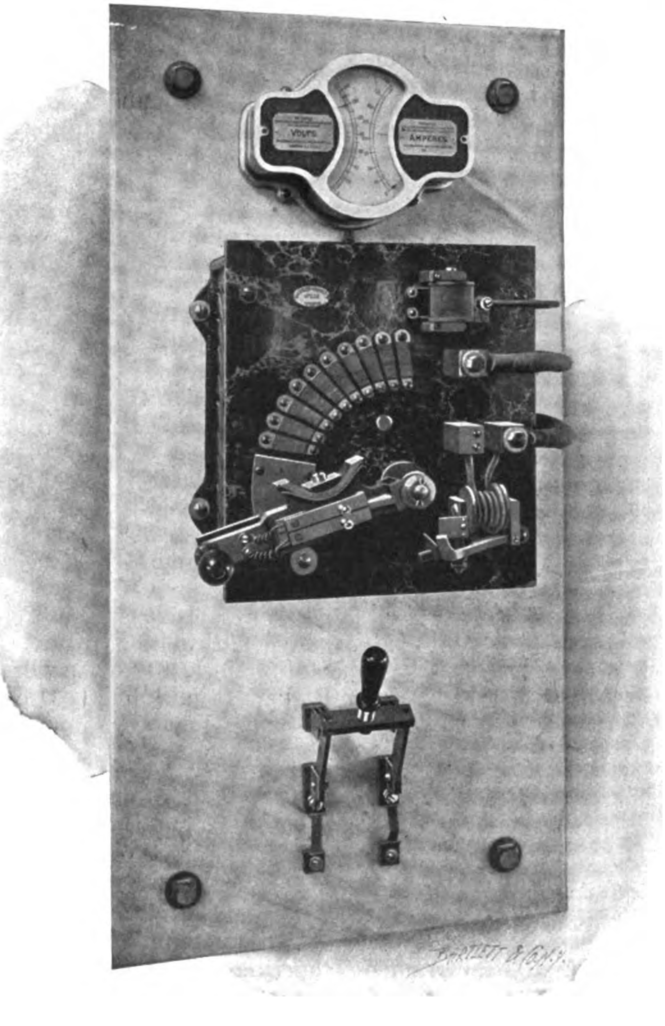

Models R and T.

Upon request the manufacturers will

send a set of bulletins containing full information about the several types, sizes, range of scales and all other necessary data for the proper selection of an instrument.

A USEFUL TOOL FOR ELECTRICIANS.

The accompanying illustration is that of the telephone or electrical snip now being manufactured by the Smith & Hemenway Co., 296 Broadway, New York city. This is made from the highest grade ma-

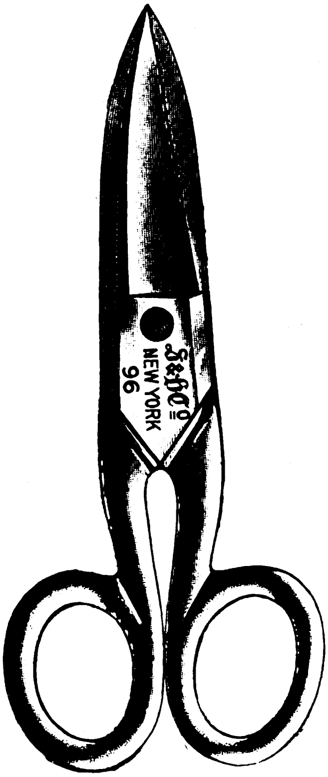

Electrician's Snip.

terial and nickel plated. It is warranted to give entire satisfaction. The snip is made very heavy and with a powerful leverage for cutting and stripping wire. It is a tool no lineman, electrician, bell-hanger or anyone, who in any way, strings wire can afford to be without. The tool is illustrated in the Green Book of Hardware Specialties published by this firm and is up to the usual high standard of which all goods made by this firm are noted for. When writing for same say, "I saw it in the TELEPHONE MAGAZINE."

INDEPENDENT ITEMS.

Shenandoah, Ia.—The Independent Mutual Telephone Company has completed its organization and is incorporated with an authorized capital of $50,000. Its principal place of business is at Shenandoah.

* * *

The Ida County Telephone Company of Ida Grove, Ia., has filed articles. Its capital is $50,000. J. W. Reed, J. S. Weiser, B. S. Noble, R S. Wassar, Frank Hess, J. E. Conn, Fred Brasted, L. K. Page and L. Q. Spaulding are the directors.

* * *

Greenfield, Ia.—A farmers' mutual telephone company has been organized in Grand River township with J. W. Roberts as president, H. A. Buck secretary, Dayton Pryor, G. W. Barnett and J. M. Musmaker directors.

* * *

St. Mary's, O.—The Minister Telephone Company has been organized with a capital stock of $10,000. Stockholders, George Van Oss, C. F. Herkenaff, J. F. Kramer, J. W. Eiting, F. J. Maizen, John Laufersweiler, C. L. Dine, F. Schmucker, B. Frierott and M. H. Osborn.

* * *

Palmyra Independent Telephone Company of Fritchton, Knox County, Ind.; capital stock, $14,000. Directors, Robert B. Patterson, John G. Dreiman, Edward E. Shaw, John W. Alton, Victor S. Manning, Lester S. Root and Charles W. Wilson.

* * *

Charlotte Valley Telephone Company of Charlotteville, Schoharie County, N. Y., to operate telephone lines between South and East Worcester, Otsego County, and Summit, Charlotteville and Lutherville, Schoharie County; capital, $650. Directors, George Oliver and Maleatus Bruce of Charlotteville and Arthur Hillis of South Worcester.

* * *

Darlington, Ind.—The Darlington Co-Operative Telephone Company has been incorporated with a capital stock of $2,000. It will operate a telephone line extending through Montgomery, Clinton and Boone counties. The directors are William N. Bowers, George N. Conrad and J. D. Coltrane.

Digitized by Google

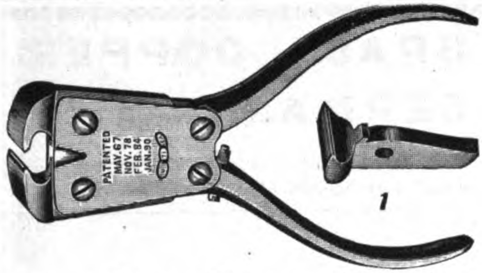

A Forgery

from the best tool steel. The Improved Compound Cutting Nipper, the Green Book of Hardware Specialties tells of. It is the most powerful nipper on the market. All parts being interchangeable, it is a time, money and labor saver. Try them and be convinced.

Utica Drop Forge & Tool Co.
Manufacturers of
NIPPERS AND PLYERS
Ask Your Dealer for these Goods.

The Smith & Hemenway Co. Corp.
Manufacturers of
Cutlery and Hardware Specialties.
296 Broadway, - - New York City

AN ERICSSON ?

YES, AND IT IS "STANDARD OF THE WORLD"

Switchboards of all sizes; telephones for all uses and full exchange equipment. We help new companies to start right and old exchanges to improve. We can interest you. Write for particulars.

ERICSSON TELEPHONE CO., 296 Broadway, NEW YORK CITY.

RELAY SHELLS

We are supplying them in large quantities for progressive manufacturers. Companies installing central systems, covering thousands of subscribers, use them. They are drawn from stock make in our own Steel Mill.

We also make

MAGNET CORES

of a superior quality of Norway Iron thoroughly annealed.

Inquiries solicited.

Samples of work to responsible concerns.

FEDERAL MFG. CO.
THOMPSON FACTORY,
CHICAGO, ILL.

MENOMINEE

Electric.....

Manufacturing Company
MENOMINEE, MICH.
Manufacturer of

High Grade Magneto Bells for Series and Bridged Work.

A careful study of the requirements of the independent telephone field, together with long experience in the manufacture of electrical apparatus, enables us to offer a very superior instrument containing all the qualities that combine to effect the highest degree of efficiency at prices commensurate with the extraordinary quality of our produce

OUR MOTTO IS
The Best Equipment.
To the Best People.
At the Best Price.
Gives the Best Results.

FAN MOTORS - - FAN MOTORS
Unequaled for Telephone Booths, Offices, Factories and Residences.

Digitized by Google

THE
Plume & Atwood Mfg. Co.
199 Lake St., CHICAGO, U. S. A.

BRASS, COPPER
AND
GERMAN SILVER
IN
Sheet, Rods, Wire, Brazed and Seamless Tube

BELL, of BARABOO, WIS.
Remodels Your Old Apparatus
∴ Uses Your Old Apparatus
TO MAKE UP-TO-DATE TELEPHONES AT A SMALL COST.
BELL TELEPHONE MFG. CO., BARABOO, WIS.

HAVE YOU RENEWED YOUR SUBSCRIPTION?

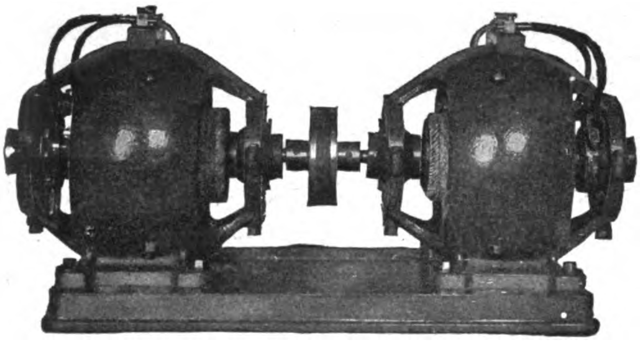

TWIN CHARGING MOTOR-GENERATORS

TELEPHONE POWER APPARATUS OF EVERY DESCRIPTION

Our Line will fill all your wants

Charging Outfits
Ringing Generators
Special Telephone Power Apparatus
Send for Bulletin No. 147

ROTH BROS. & CO.
88-92 W. Jackson St., CHICAGO, ILL.

The American Electric and Automobile Patents Monthly

INCLUDING ALL PATENTS FOR TELEPHONES

The publication to contain each and every sheet and figure of the drawings of the telephone patents, the claims in full, a short description of the invention, also a complete list of the references cited while the applications were pending, *interferences, parties thereto and the decisions, also reissues, designs and trademarks pertaining thereto.* . . . .

S U B S C R I P T I O N P R I C E S

Including the *Telephone Magazine* Published Monthly

United States and Canada . . $5.00 per annum, in advance
Foreign Countries . . . . . 7.50 per annum, in advance

A D D R E S S

Telephone Magazine Medinah Temple Chicago, U. S. A.

Digitized by Google

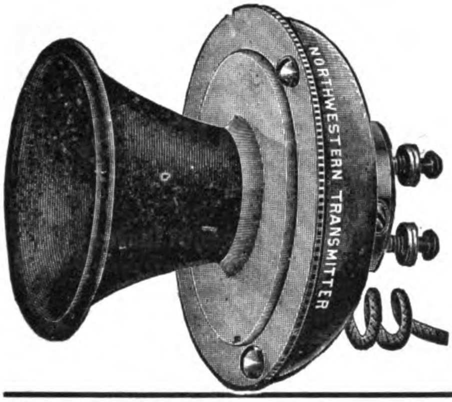

NORTHWESTERN TELEPHONE MANUFACTURING CO.

We make Telephones for the Wholesale and Supply Trade

ANY STYLE, AND PARTS FOR ALL TELEPHONES.
WORKMANSHIP GUARANTEED.
SEND FOR PRICES.

Address 191 to 193 S. Canal St., CHICAGO.

PAY Stations that PAY

This is the Station Adopted by the

KEYSTONE TELEPHONE CO., Philadelphia, Pa.

Our Stations are used by the Exchanges in

Baltimore.
Pittsburg, Pa.
Indianapolis, Ind.
Syracuse, N. Y.
Columbus, O.
Saginaw, Mich.
Denver, Colo. (Bell)
Memphis, Tenn. (Bell)
Philadelphia, Pa.
Cleveland, O.
Rochester, N. Y.
Grand Rapids, Mich.
Savannah, Ga.
Salt Lake, Utah (Bell)
Kansas City, Mo. (Bell)
New Orleans, La. (Bell)

Every Large Independent Exchange in this Country now using Pay Stations use our make. This is significant. They get the BEST.

The AMERICAN TOLL TELEPHONE CO.

40 to 50 Sheriff St., CLEVELAND, O.

Bound Volumes

Vol. XVII. January-June 1901
Vol. XVIII. July-December 1901

OF THE

Telephone Magazine

NOW READY

Substantially bound in Muslin with Gilt Title, will be sent, postpaid, for $1.50 to any address.

Telephone Magazine

Medinah Temple, Chicago, U. S. A.

A LIBRARY OF TELEPHONE LITERATURE

Victor Samson Bridging Bell.
Most powerful ever produced.

THE

Victor Telephone Works

203-207 So. Canal St., CHICAGO, ILL., U. S. A.

EVERYTHING IN TELEPHONES AND SWITCHBOARDS

Thoroughly Practical, Nothing Experimental, and No Guesswork.

Get our prices before placing your order. We guarantee our apparatus to be electrically correct and mechanically perfect.

Please mention TELEPHONE MAGAZINE in writing to advertisers

Digitized by Google

TELEPHONE AND KINDRED BOOKS.

THE INSPECTOR AND TROUBLE MAN. By A. E. Dobbs.
A complete volume on telephone faults and exchange construction. 110 pages, 67 illustrations $1.00

TELEPHONES; THEIR CONSTRUCTIONS AND FITTING. By F. C. Allsop.
A practical treatise on the fitting up and maintenance of telephones and the auxiliary apparatus. 208 illustrations and folding plates. Third edition, 12mo, cloth 1.25

PRACTICAL FEATURES OF TELEPHONE WORK. By A. E. Dobbs.
This volume is on telephone construction, and should be of great value to every telephone man. 135 pages, 65 illustrations .... .75

SMALL ACCUMULATORS. By Percival Marshall.
As storage batteries are being used in the telephone exchanges, all telephone men should be familiar with their construction and working. This volume will be found to be complete to every telephone student. 80 pages, 23 illustrations .... .50

THE GALVANOMETER AND ITS USES. By C. H. Haskins.
A manual for electricians and students. Fourth edition, revised. 12mo, morocco; illustrated 1.50

INDUCTION COILS. By G. E. Bonney.
A practical manual for amateur coilmakers. 101 illustrations, 12mo, cloth 1.00

ELECTRIC TELEPHONY. By E. J. Houston and A. E. Kennelly.
Elementary Electro-Technical Series. 16mo, cloth; illustrated 1.00

ELECTRIC INSTRUMENT MAKING FOR AMATEURS. By S. R. Bottone.
A practical handbook, with 48 illustrations. Fourth edition. Enlarged by a chapter on The Telephone. 12mo, cloth .... .50

TELEPHONE INSPECTOR'S HANDBOOK. By W. H. Hyde and J. H. McManman.
Telephone Troubles and How to Find Them. 64 pages. Many illustrations. The only book enabling telephone men to instantly overcome telephone troubles .... .25

THE TELEPHONE. By William J. Hopkins.
Outline of the development of Transmitters and Receivers. 12mo, cloth, New York: 1898, 1.00

THE MAGNETO HAND TELEPHONE. By Norman Hughes.
Its Construction, Fitting Up and Adaptability to Everyday Use. 12mo, cloth 1.00

TELEPHONE HAND BOOK. By Herbert Law Webb.
12mo, cloth. 133 illustrations. Chicago: 1900 .... 1.00

PRACTICAL ELECTRICS.
This volume could rightly be called an electric encyclopedia. It contains information on everything pertaining to electrical matters. 135 pages, 126 illustrations .... .75

SYSTEMATIC TREATISE ON ELECTRICAL MEASUREMENTS. By H. C. Parker.
Treats more particularly of methods used in laboratory, telegraph and cable testing. 120 pages, 100 illustrations, cloth 1.00

PRACTICAL TELEPHONY. By J. Bell and S. Wilson.
Adapted to Requirements of City and Guilds of London Institute. 8vo, limp cloth. London: 1898 .... 1.00

ELECTRICAL CATECHISM. By Geo. D. Shepardson, M. E.
An introductory treatise on electricity and its uses. 400 large octavo pages. 1516 illustrations. New York: 1901 .... 2.00

AMERICAN TELEPHONE PRACTICE. By Kempster B. Miller.
518 large octavo pages. 379 illustrations. This book treats of the subject in a simple and comprehensive manner from the practical standpoint, and almost entirely without the use of mathematics. All matters of principle and practice are clearly and fully considered, enabling the reader to obtain an understanding, not only of the rudiments of telephony, but also of the most intricate circuits of modern exchanges 3.00

WILL SEND ANY ELECTRICAL BOOK PUBLISHED ON RECEIPT OF PRICE, POST PREPAID.

ADDRESS

Telephone Magazine · **MEDINAH TEMPLE, CHICAGO, U. S. A.**

Digitized by Google

Four Party Line

SELECTIVE SIGNAL TELEPHONES

......FOR.....

Central Energy Systems

ANTICIPATING THE PRESENT GREAT DEMAND FOR TWO AND FOUR PARTY SELECTIVE SIGNALING TELEPHONES FOR USE IN CONNECTION WITH COMMON BATTERY OR CENTRAL ENERGY SWITCHBOARDS, THE AMERICAN ELECTRIC TELEPHONE COMPANY SECURED CONTROL OF VALUABLE PATENTS PERTAINING TO SELECTIVE SIGNALING APPARATUS.

PRIOR TO THE AMERICAN COMPANY SECURING THEIR PATENTS, SELECTIVE SIGNALING SERVICE FOR CENTRAL ENERGY WORK WAS, AT ITS BEST, A VERY UNSATISFACTORY PROPOSITION. IN THE WELL-KNOWN SYSTEMS OF SELECTIVE SIGNALING APPARATUS, THE USUAL PRACTICE IS TO USE TELEPHONES IN WHICH THE SIGNAL BELL IS SELECTIVELY POLARIZED—THAT IS TO SAY, THE SIGNAL BELL IS SO ARRANGED THAT IT WILL RESPOND ONLY TO CURRENTS PASSING THROUGH IT IN A CERTAIN DIRECTION, EITHER PLUS OR MINUS, DEPENDING UPON WHETHER THE BELL IS ARRANGED TO OPERATE WHEN A CURRENT IN A MINUS OR PLUS DIRECTION IS SENT THROUGH IT.

HAVING EXPERIENCED ALL OF THE ABOVE DIFFICULTIES AND PRACTICALLY ABANDONED FOUR-PARTY LINE SELECTIVE WORK, THE AMERICAN ELECTRIC TELEPHONE COMPANY OBTAINED CONTROL OF THE LEICH SELECTIVE SIGNALING PATENTS. THIS SYSTEM OVERCAME EVERY ONE OF THE OBJECTIONS PREVIOUSLY PRESENT IN THE SELECTIVELY POLARIZED SYSTEM.

SEE OUR NEW SELECTIVE PARTY LINE SYSTEM

FOR FARMERS' LINES—A LARGER NUMBER CAN BE USED ON ONE LINE AND HAVE PRIVATE COMMUNICATION AND SELECTIVE RINGER.

SOMETHING NEW. FOR PARTY LINES.

ANY NUMBER OF TELEPHONES CAN BE USED ON A METALLIC LINE. — PERFECTLY SELECTIVE RINGING AND TALKING.

SEND FOR CIRCULAR AND PRICES.

American Electric Telephone Co.

36 to 58 West Jackson Boulevard, Chicago, U. S. A.

INDEPENDENT TELEPHONE

Digitized by Google

Two Dollars

FOR A NAME

We want your dealer's name, (Stationer, Jeweler or Druggist) and as an inducement for you to send it to us, we will send postpaid, your choice of these popular styles

Laughlin Fountain Pen

Superior to the $3.00 grades of other makes, for the name and only

$1.00

BY REGISTERED MAIL 8C EXTRA.

If you do not find the pen as represented, and superior in every respect to any pen you ever used, return it and get your $1.00 back as the pen is

SENT ON APPROVAL

TO RESPONSIBLE PEOPLE

It Costs You Nothing

to try it a week. Safety Pocket Pen Holder sent with each pen

FREE OF CHARGE

Do not miss this opportunity to secure a $3 value at a price that is only a fraction of its real worth. Finest grade 14 Karat Gold Pen, and guaranteed. Everybody knows that in Fountain Pens the

Laughlin

has no equal, and is always sold under the express conditions that if not entirely satisfactory, your money refunded. Address

Laughlin Mfg. Co.

653 Griswold Street,

DETROIT, - MICHIGAN.

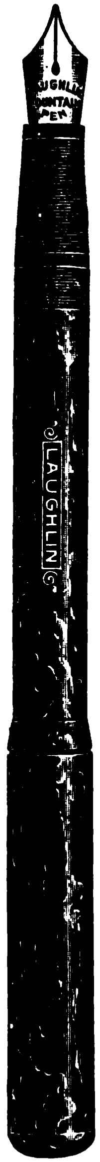

Gordon Cells

Extensively Used by

Leading Telephone Companies and Manufacturers

Guaranteed Long Life and Efficiency

Ask for Catalog and Discounts

Gordon Battery Co.

439-445 E. 144th Street NEW YORK

SWITCHBOARD CORDS

SILK CORDS

Any Style — For Any Purpose

PROMPT DELIVERIES

The McDermid Mfg. Co.

120 W. Jackson Boulevard, CHICAGO, U. S. A.

BINDERS

For preserving your Copies of

Telephone Magazine

Will be sent postpaid for

50 cents in stamps.

STRONG, SIMPLE, DURABLE.

Will hold six months' or a year's numbers.

SEND FOR ONE.

Telephone Magazine

Medinah Temple, Chicago, U. S. A.

Digitized by Google

SPECIFY THE "Chloride Accumulator" FOR TELEPHONE WORK.

THE ELECTRIC STORAGE BATTERY CO.

PHILADELPHIA

PHILADELPHIA Allegheny Ave. & 19th St. — NEW YORK 100 Broadway — BOSTON 60 State St. — CHICAGO Marquette Bldg — BALTIMORE Continental Trust Bldg.
ST. LOUIS Wainright Bldg — CLEVELAND New England Bldg. — SAN FRANCISCO Nevada Block — DETROIT Michigan Elect Co — HAVANA, CUBA G F. Greenwood, 34 Empedrado St.

SPEER CARBON COMPANY

Manufacturer of

CARBON BACKS AND SPECIALTIES FOR TELEPHONES—ALSO LIGHTNING ARRESTER CARBONS OF EVERY DESCRIPTION .....

ST. MARYS, PA.

Pacific Telephone Intensifier

A Device for Intensifying the Sound from the Telephone.

With this device a person hard of hearing will be able to hear the faintest sounds with perfect ease. On long distance telephone work it is invaluable, and for use in factories where noise is a great hindrance to clear talk this Intensifier will relieve this trouble. It is simple and is not necessarily attached to the phone. Can be fastened up on the wall alongside of phone. Does not interfere with the operation of the phone in the ordinary manner. When you wish to use the Intensifier you simply take the receiver off from the hook, place it in the metal receptacle on which the tube is attached, place the hearing buttons to the ears and you are ready for conversation. This gives you the freedom and use of both hands and promotes every sound received from the telephone. Simple and very durable.

Sent complete to any address for....$1.50

We desire agents in each town to sell direct to the subscriber.

PACIFIC ELECTRIC COMPANY,

LA CROSSE, WIS.

THIS AD. WILL ONLY APPEAR ONE TIME.

Why you should Advertise in the

AMERICAN TELEPHONE JOURNAL

BECAUSE

1. It is not a house organ.
2. No one connected with manufacturing, jobbing, selling or operating has a dollar's interest in it. It therefore does not "play favorites" and is fair to all.
3. It publishes more telephone literature and news than all of the telephone and electrical papers of the world combined.
4. It spares no expense to procure latest and best matter that is of interest to the operator, whether he be a farmer or the chief officer or engineer of a million dollar company.
5. Its paid subscription is greater than the combined paid subscriptions of all telephone papers and telephone subscriptions of all electrical papers.

The AMERICAN TELEPHONE JOURNAL

CHICAGO: 518 Monadnock Block. — NEW YORK: 116 Nassau Street.

A POPULAR SCIENTIFIC WEEKLY JOURNAL

ELECTRICITY AND ELECTRICAL ENGINEERING

The Most Successful Medium for Advertising in the United Kingdom

WRITE FOR SAMPLE COPY AND ADVERTISING RATES

2 EXETER ST. STRAND — LONDON, ENGLAND

ELECTRICAL ENGINEERING PUBLISHING CO., Marquette Building, Chicago, Ill.

Digitized by Google

INDEX TO ADVERTISEMENTS.

	PAGE
American Electric and Automobile Patents—Publication	XII
American Electric Telephone Co.—Telephone Apparatus	IV
American Telephone Journal	XVII
American Electric Telephone Co.—Transmitters	XX
American Electric Telephone Co.—Telephones	VIII-XV
American Electric Telephone Co.—Selective Signal Telephones	XV
American Electric Telephone Co.—Glass Insulators	VI
American Toll Telephone Co.—Pay Stations	XIII
Bell Telephone Mfg. Co.	XII
Bulkley, Chas. C.—Patent Lawyer	X
Chicago Edison Co.—Electric Lighting Supplies	III
Central Manufacturing Co.—Announcement	X
Colt, Henry A.	X
Conley Foil Company—Tin Foil	X
Clement, Edward E.—Announcement	
Electric Review	XVI
Electric Storage Battery Co.—Accumulators	XVII
Electricity (London)—Newspaper	XVII
Ericsson Telephone Co.—Microphones	XI
Federal Manufacturing Co.—Relay Shells	XI
For Sale	
Gordon Battery Co.—Batteries	XVII
International Correspondence Scoools	XVI
Keystone Electric Telephone Mfg. Co.—Telephones.	VI
King, P. S. & Son	XVIII
Klein, Mathias & Son	X
Laughlin Mfg. C.—Fountain Pens	XVI
Menominee Electric Mfg. Co.—Magnets	XI
McDermid Mfg. Co.—Magnet Wire	XII
National Carbon Co.—Batteries	V
New York Insulated Wire Co.—Rubber-covered Wires and Cables	X
Northwestern Tel. Mfg. Co.—Telephones	XIII
Nungesser Electric Battery Co.—Batteries	VI
Okonite Co., Ltd	X
Pacific Electric Co.—Telephone Intensifiers	XVII
Plume & Atwood Mf . Co.—Brass, Copper and German Silver	XII
Roth Bros. & Co.—Power Apparatus	XII
Royal Trust Company	X
Situations Wanted	
Smith & Hemenway	XI
Special Offer	
Standard Underground Cable Co.	X
Speer Carbon Co.—Carbon Specialties	XVII
Swedish-American Telephone Co.—Telephones	V
Telephone Magazine—Binders	XIV
Telephone Magazine—Bound Volumes	XIII
Telephone Magazine—Books	XIV
Telephone Magazine—Diploma	IX
Telephone Magazine	VII
Victor Telephone Works—Telephones	XIII
Weston Elec. Instrument Co.—Testing Instruments	III

NEW PUBLICATIONS FOR ENGINEERS

THE PRACTICAL PHYSICS OF THE MODERN STEAM BOILER.

By FREDERICK JOHN ROWAN, A. M. I. C. E., M. I. E. S., late Vice-Pres. Fed. Inst. M. E., late Mem. Coun. Soc. Chem. Ind. In this work the physical principles which demand consideration in the construction and working of Steam Boilers are passed in review, and the result is to give a new standpoint from which many of the questions connected with steam generation can be considered. This work deals with the Boiler from the point of view of a Heat-Engine, and, as the title indicates, is occupied with the Physics of the Steam Boiler. It will thus be seen that it proceeds on the lines on which alone improvement in steam generation can be hoped for. Price £1 1s, net. Demy 8vo. Over 400 pp., with numerous illustrations

HIGH-SPEED STEAM ENGINES.

A Guide to English and Foreign Practice. By W. NORRIS, M. I. Mech. E., &c., and BEN H. MORGAN. With reproductions of over 156 photographs and drawings, and numerous tests. Second Edition. Demy 8vo, cloth. 10s 6d, net.

"We can cordially recommend this book to any one who wants to know all about high-speed engines."—*Electricity*

PUMPS: THEIR CONSTRUCTION AND MANAGEMENT.

Graphically illustrating the different classes of Pumps, pointing out the advantages and disadvantages of each class, and giving hints as to management. By PHILIP R. BJORLING. Cloth. 3s 6d, net.

"Mr. Philip R. Bjorling is one of the greatest authorities on Pumps."

MODERN METHODS OF SAVING LABOR IN GASWORKS.

A profusely illustrated work, showing the latest and best means employed for economically manipulating and managing Gasworks' material. By C. E. BRACKENBURY. A. M. Inst., C. E. Cloth. 3s 6d, net.

"A most valuable monograph on the subject."—*Scientific American*,

GLASGOW INTERNATIONAL EXHIBITION, 1901—AN ENGINEERING RECORD.

The only complete technical work dealing with the engineering sections. Graphically illustrated with photographs and drawings, and contains several colored plates Cloth. 5s, net,

"I congratulate you on the careful manner in which you have compiled so elaborate and exhaustive a book and one so extremely interesting."—*Mr. Thomas Young, the Engineer to the Exhibition.*

TRANSPORT BY AERIAL ROPEWAYS.

A complete treatise on the leading systems of ropeways. Fully illustrated and described by the designs of each system. Second edition. Paper. Price, 1s; post free, 1s 4d, net.

"An elaborate production describing all the important aerial systems."—*Mining World.*

London: P. S. KING & SON, 2 and 4 Great Smith Street, Westminster

Digitized by Google

PHILADELPHIA STYLE
DESK SET

Digitized by Google

American Central Energy **Transmitter**

FAR SUPERIOR TO THE BELL

LONG DISTANCE SOLID BACK

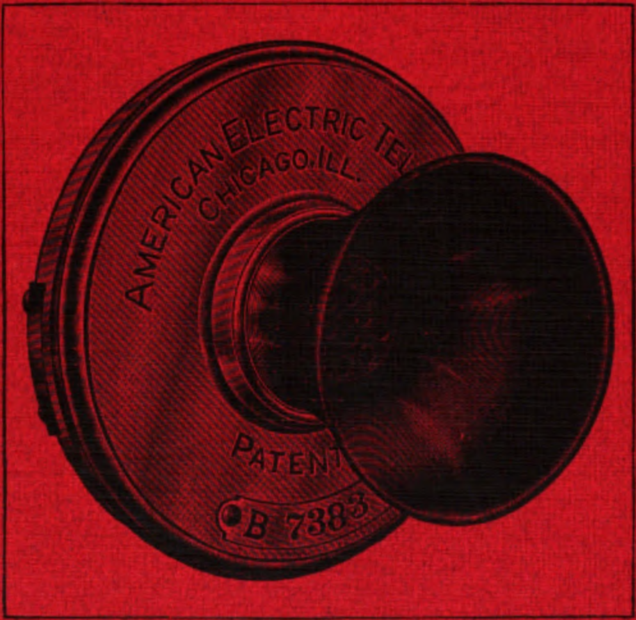

AMERICAN CENTRAL ENERGY TRANSMITTER

WHEREVER INTRODUCED THIS TRANSMITTER HAS BEEN PRONOUNCED THE MOST EFFICIENT AND POWERFUL TRANSMITTER EVER MADE. THIS BEING THE OPINION OF ENGINEERS WHOSE JUDGMENT IS BASED UPON EXHAUSTIVE TESTS.

American Electric Telephone Co.

36 to 58 West Jackson Boulevard, Chicago, U. S. A.

Digitized by Google

Telephone Magazine

VOL. XX. CHICAGO, SEPTEMBER, 1902. NO. 132.

CONTENTS

Prof. Pupin's Discovery. By Frederick A. Wegner (Illustrated) 101
Telephones for Divers.... 104
Rapid Progress of Illinois Telephone Company 105
Rights of Telephone Companies.... 105
The Telephone, That Potent Factor in Human Affairs. Fred. De Land.... 106
Kansas Independent Telephone Association, Second Annual Convention.... 108
Oust Bell Spies.... 109
Monthly Digest of Telephone and Kindred Patents By Arthur F. Durand. (Illustrated) 112
Independent Telephone Progress in the South.... 123
Progress of the Keystone Telephone Company.... 129
The Farm Telephone and Electric Lines.... 129
Personal 129
'Phone Franchise Granted.... 129
Editorial 130
Telephone Service 130
Independent Telephone Association of the United States.... 130
The Trip Through the Tunnel 131
Valuable Features of the Telephone Digest 132
Post Check Currency 134
Indiana Mutual Telephone Association.... 134
Considering Telephones.... 134
Farm Telephones and Business.... 135
Personal.... 136

PRICE, 10 CENTS.

Entered at the Chicago Post Office as Matter of the Second Class.

Digitized by Google

"I have taken the Telephone Magazine one year, and I think it the best thing on earth for a telephone man to read. Please don't make any mistake in my address."
William G. Porter.

Digitized by Google

Weston Electrical Instrument Co.

Waverly Park, NEWARK, N. J., U. S. A.

PORTABLE DIRECT READING

Voltmeters and Wattmeters

For Alternating and Direct Current Circuits.

The only standard portable instrument which deserves this name.
Absolutely permanent, if not abused.

Portable Direct Reading

Voltmeters, Milli-Voltmeters. Ammeters, Milli-Ammeters.

PORTABLE DIRECT READING WATTMETER FOR ALTERNATING AND DIRECT CURRENTS.

A NEW CATALOGUE ON

Voltmeters, Potential Indicators, Ammeters

FOR

Central Stations

AND

Isolated Plants.

Highest Accurancy
Least Consumption of Energy.

SEMI-PORTABLE LABORATORY STANDARD VOLTMETERS AND AMMETERS.

The most accurate and most convenient absolute standard ever offered.

Correspondence Solicited.

BERLIN—European Western Electrical Instrument Co., Ritterstrasse No. 88.

LONDON—Elliott Bros., No. 101 St. Martins Lane.

CHICAGO EDISON CO.

DEALERS IN

ELECTRIC LIGHTING SUPPLIES

139 ADAMS STREET

CHICAGO

Digitized by Google

"THE DEPENDABLE KIND"

AMERICAN

Switchboards—**Multiple**
for Central Energy or Magneto Systems.

Toll-Line Boards
to meet the most exacting requirements

Protective Devices

Simple, Durable, Efficient.

Lightning Arresters

Distributing Boards

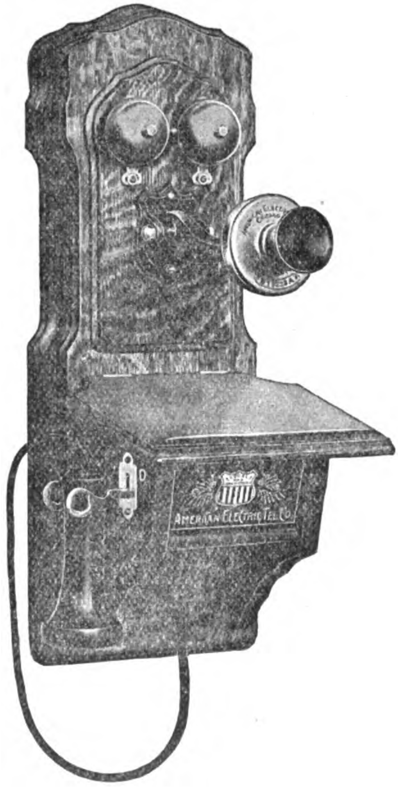

Cable Terminals

With Improved Sneak Current Protector and Carbon Arrester

Repeating Coils

Extension Bells

THE FINISHED PRODUCT
No. 34 Central Energy

Equipped with American Beauty Transmitter.
Bell Style Receiver with Concealed Cord Connection.
2 M. F. Condenser. 1000 ohm Adjustable Ringer.
Hollow Adjustable Transmitter Arm and Concealed Binding Posts.

MANUFACTURED ONLY BY THE

AMERICAN ELECTRIC TELEPHONE CO.
CHICAGO, ILL.

Please mention TELEPHONE MAGAZINE in writing to advertisers

Digitized by Google

$4.50 VICTOR DESK STAND

WITH

Transmitter and Receiver

WHILE THEY LAST

VICTOR DESK STAND COMPLETE WITH GENERATOR BELL AND BATTERIES - - - - $9.00

VICTOR TELEPHONE WORKS

203-207 So. Canal St., Chicago, Ill, U. S. A.

The Columbia will do more work, last longer, and give better satisfaction than ANY other dry cell.

The same is true of the National No. 2 Cell, compared with other wet cells.

With our cells you can better your service, and cheapen cost of maintenance. Write for prices and particulars.

LOCK DRAWER "L"
CLEVELAND, OHIO

National Carbon Co.

Digitized by Google

Nungesser Primary Batteries.

Our improved No. 4, 300 ampere-hour Closed Circuit Battery is the most powerful battery of this class. It is put up in both glass and porcelain jars. This battery is very largely used for telephone exchange service, central energy systems, gas and gasoline engine ignition, railway signals, etc.

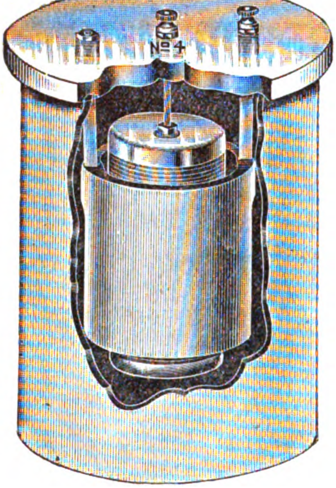

No. 4—SIZE 5½ in. dia. x 7½ in. high.

THE 1900 DRY BATTERY

Is manufactured Expressly for Telephone Exchange Service. In every comparative test made within the past four years, the 1900 Dry Battery has proven its superiority over all other dry or wet batteries. This battery has shown, in many of the most progressive telephone exchanges in this country, over there years' continuous service, without attention of any kind. They are now more largely used than all other dry or wet batteries combined.

OUR PRICES ARE THE LOWEST.

SIZE, 2½ in. dia. x 6 in. High.

MANUFACTURED BY THE

Nungesser Electric Battery Co.,

CLEVELAND, OHIO, U. S. A.

Western Representative, THOMAS G. GRIER, 126-130 Jackson Boulevard, Chicago, Ill.

Keystone Electric Telephone Co.

MANUFACTURERS OF HIGH-GRADE

TELEPHONES AND SWITCHBOARDS

TOLL LINE EQUIPMENT

Exchanges Equipped in Every Detail

WRITE FOR PRICES

Office and Factory, 565 Old Ave., PITTSBURG, PA.

Digitized by Google

"It is one of the best publications of its kind that comes to our office, and we wish you much success."

MOORE & SON, Decatur, Tenn.

IF THE BEST IS
GOOD ENOUGH FOR YOU

YOU WILL BE SATISFIED WITH THE

Telephone Magazine

The Oldest Independent Telephone Paper in the World.

Each Number contains some interesting and instructive articles on

Exchange Construction and Operation,
Telephone Apparatus, Switchboards,
Toll Lines, Line Construction,
Protective Devices,
Central Energy and Other Systems,
Telephone Troubles

And a Monthly Digest of

TELEPHONE AND KINDRED PATENTS.

EIGHT CENTS A MONTH PAYS FOR THE BEST TELEPHONE PAPER, OR A DOLLAR BILL WILL BRING THE PAPER REGULARLY FOR A YEAR.

NEWSDEALERS SELL IT. SAMPLE COPY FREE.

Address Telephone Magazine

Medinah Temple, CHICAGO, U. S. A.

Digitized by Google

THE DEPENDABLE KIND

AMERICAN SAMSON BRIDGING

No. 36.

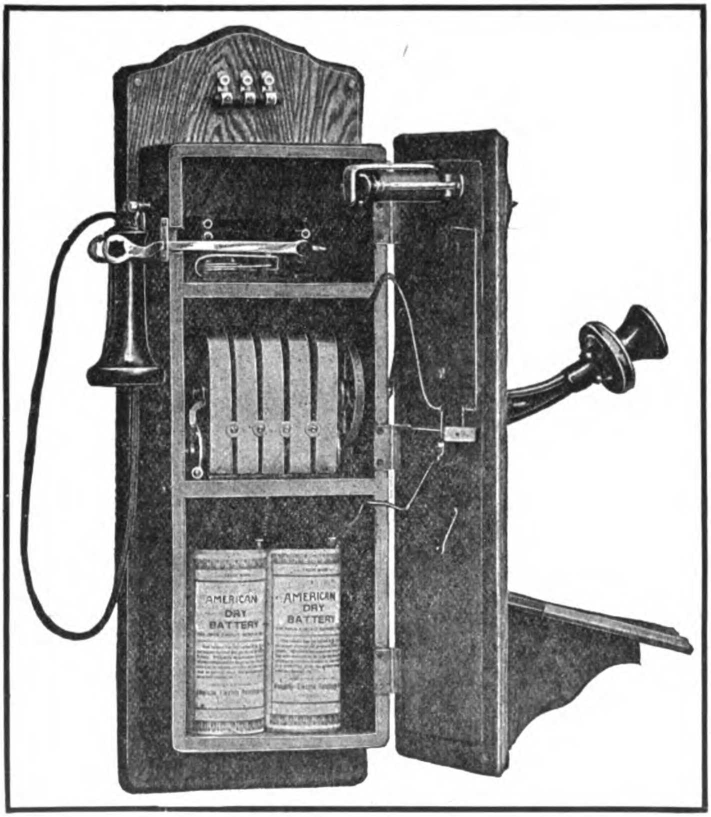

American Samson Bridging Telephone equipped with the well-known Gold Electrode Transmitter, Bell Style Receiver, with concealed cord connections, self-contained switch hook, patented lightning arrester, silk insulated ringer coils wound to 1,600 ohms and with a Samson 5-bar Bridging Generator, making it one of the most powerful and efficient telephones on the market :: ::

MANUFACTURED BY AMERICAN ELECTRIC TELEPHONE COMPANY, CHICAGO.

Please mention TELEPHONE MAGAZINE in writing to advertisers.

Digitized by Google

COOK'S APPARATUS

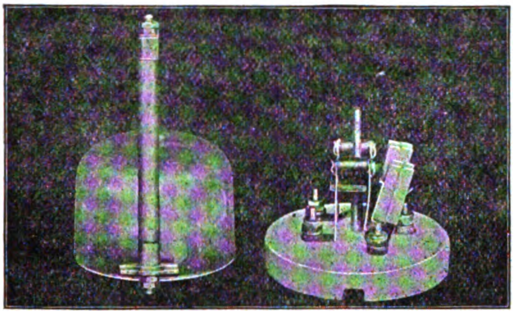

IS UNIVERSALLY RECOGNIZED AS

THE STANDARD

IT IS USED IN

HUNDREDS

OF

Bell and Independent Exchanges

of which a list will be furnished upon request, for investigation.

My New and Large Factory is Completely Equipped with

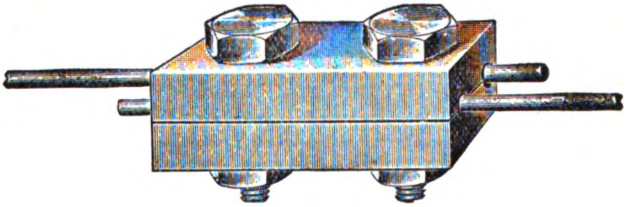

IMPROVED MACHINERY

Enabling me to fill all contracts promptly.

All Apparatus Fully Covered by

United States Patents

FRANK B. COOK

MANUFACTURER OF

Pole Top Terminals, Combined Cable Terminals and Protectors, Lock-out Cable Terminals, Strong Current Protectors, Sneak Current Protectors, Heat Coils, Distributing Boards.

240-244 W. Lake Street, - CHICAGO, U. S. A.

Digitized by Google

Willard L. Candee, H. Durant Cheever, } Managers.

1889, Paris Exposition—Medal for Rubber Insulation.
1893, World's Fair—Medal for Rubber Insulation.

Geo. T. Manson, Gen. Supt.
W. H. Hodgins, Secretary.

OKONITE TRADE MARK

THE OKONITE CO., Ltd.,

SOLE MANUFACTURERS OF

OKONITE WIRES, OKONITE TAPE, MANSON TAPE

CANDEE WEATHERPROOF WIRES.

253 Broadway. NEW YORK.

THE

CONLEY FOIL COMPANY

TIN FOIL

FOR ELECTRICAL APPARATUS

521 to 541 West 25th Street, NEW YORK

THE

Royal Trust Company

CHICAGO

Acts as Trustee for Bond Issues

WRITE FOR TERMS

CHAS. C. BULKLEY

PATENT LAWYER

Telephony a Specialty

1460 Monadnock CHICAGO

Invites Correspondence

HENRY A. COIT

Laclede Building, - ST. LOUIS

FINANCES and CONSTRUCTS

TELEPHONE PROPERTIES

Organization Construction

M. KLEIN & SON.

KLEIN'S CLIMBERS

Connectors', Linemen's and Construction Tools

Catalogue free ☞ Send for one

MATHIAS KLEIN & SON

87-89 W. Van Buren St., Chicago, Ills.

Please Note.

Our entire plant was destroyed by fire May 10th. We are glad to say, however, we are

"S. D. B. S. I. T. R."

again, ready for business, and are filling orders as usual, and we solicit your business and assure you same shall have our best attention and be appreciated.

Yours very truly,

Central Manufacturing Co.,

Chattanooga, Tenn., U. S. A.

New York Insulated Wire Co.

CHICAGO BRANCH

192 South Desplaines Street

CHICAGO, ILL.

Makers of All Kinds of Rubber Covered Wires and Cables.

Main Office: NEW YORK

Branches: BOSTON, SAN FRANCISCO, CHICAGO

STANDARD

Standard Underground Cable Co.

BARE WIRE, INSULATED WIRE, CABLES.

Wire Cables and Accessories for Telephone use, a specialty.

FOR PRICES AND INFORMATION, ADDRESS

PITTSBURG, Westinghouse Bldg. NEW YORK, 56 Liberty St. PHILADELPHIA, 1225 Betz Bldg. CHICAGO, 322 Rookery. SAN FRANCISCO, Mills Bldg. BOSTON, Tremont Bldg.

FACTORIES: Pittsburg, Pa., Oakland, Cal., Perth Amboy, N. J.

Digitized by Google

Telephone Magazine

Copyrighted, 1902, by Carl E. Kammeyer. Entered at the Chicago Postoffice as mail matter of the second class.

VOL. XX. CHICAGO, SEPTEMBER, 1902. No. 132.

PROF. PUPIN'S DISCOVERY.

By Frederick A. Wegner.

In the relation of important electrical laws to mathematics, it will, perhaps, be of interest to compare the last clause in the following sentence with Professor Pupin's own words and his Invention of Reducing the Attenuations of Electric Waves.

In the case of cable conductors, the electrostatic capacity is so far in excess of that required to produce the lowest impedance, in conjunction with the electromagnetic capacity, *that it might be advantageous to insert coils of wire at intervals in the circuit for the purpose of increasing the effective magnetic capacity.*

The following are Professor Pupin's words:

"The problem I had to solve was to reduce the *capacity* so that a message could be transmitted clearly and rapidly. I discovered at the outset that the slowness of transmission was due to loss of energy by conversion into heat and otherwise. The puzzle was to preserve this energy.

"By *mathematical calculations* I demonstrated that this could be done by means of a *choke coil* placed at *intervals* along the line. On a cable line they should be at intervals of one-eighth of a mile and on land lines at intervals of a mile. I have been working on the invention for *five years* before taking out a patent."

Failure in the transmission of speech on long distance lines is sometimes due to attenuation or reduction of the current strength received caused by the high impedance of the circuit.

The receiving instrument may fail to correctly reproduce the quality of the sounds, from the fact that the different overtone intensities are not correctly reproduced as regards their amplitude, the shriller, therefore higher frequency overtones, suffering greater attenuation in transmission than the lower tones.

One of the patents claims the method of diminishing the attenuation constant of a uniform wave conductor, which consists in *increasing* the inductance of the conductor sufficiently to secure the required diminution of the attenuation constant, by *distributing* along the conductor *inductance sources* at periodically recurring points, the distance between consecutive points being such as to preserve approximately its character as a uniform conductor with respect to the waves to be transmitted, substantially as described.

By such means is obtained a cable or line of increased effective inductance tending to neutralize the electrostatic capacity and thereby bringing about clearer tones in the receiving instrument.

On short lines failure in the transmission of speech may occur because of high artificial impedance, resulting in attenuation or great impedance. Any high resistance, such as a loose connection or a large choking coil, so far reduces the current strength in the circuit as to render the transmitted speech inaudible. To remedy this difficulty all undue resistance must be eliminated, low resistance conductors adopted, a receiver adjusted with a greater degree of care and fineness, and a transmitter employed as powerful as is consistent with the conditions of the circuit.

The problem resolves itself into increasing the current strength, Ohm's law here entering as a factor, necessitating the diminishing of impedance and the increase in E. M. F. of the line.

Now, if as in Claim 1, a system of electrical wave transmission a non-uniform wave conductor consisting of a conductor having sources distributed at points along its entire length in such a manner that

Digitized by Google

the resulting wave conductor is equivalent within proper limits to its corresponding uniform conductor but of increased effective conductance is employed, we diminish impedance and increase the E. M. F. of the circuit.

The impedance of a line is the resultant of several causes. First, the ohmic resistance, depending on the cross-section, length, and character of the conductors employed. This cause would exist in a continuous current circuit. It is, therefore, desirable that all long distance lines have as little resistance as is commerciably practicable. By increasing the size of copper wires, we increase the cost, and at the expense of the former only can we lower the resistance.

By the proper insertion of retardation coils though he increased the ohmic resistance he also increased the self-induction, thereby retarding the telephonic current, which has a tendency not to enter them, but *pass along* the line, as is clearly shown in the bridging bell system of party lines where the ringer magnets are wound *purposely* with a great number of turns and are provided with long, heavy iron cores for the purpose of increasing self-induction.

The second factor in the production of impedance is the insulation resistance of the lines; this is the resistance measured between each line wire and ground, or between the two lines, forming a metallic circuit. Only a small loss of current leakage occurs in lines of a high degree of insulation, yet this high insulation will not give the best results in the long distance of speech and is not generally employed. With a very low insulation and a corresponding increased current leakage the received current is so feeble that the limiting distance is soon reached. A particular condition of insulation which is best adapted to long distance transmission applies, therefore, for every circuit. The insulation should always be good and uniform in order to obtain the best results.

Note in Claim 3. In a system of electrical wave transmission a non-uniform wave conductor and inductance coils in *series* in it at periodically recurring points, the inductance resistance and capacity of the interposed inductance coils being adjusted in such a way as to give, with the inductance resistance and capacity of the uniform conductor, a *predetermined* inductance resistance and capacity per unit length, and the distance between the interposed coils being adjusted in such a way as to equal a fractional part of one-half of the shortest wave length which is to be transmitted.

The third factor in the production of impedance is the electrostatic capacity of the line or its power to act as a condenser. The greater the electrostatic capacity, the greater the amount of electric flux which can be established between the conductors per mile or per foot. The presence of this electrostatic capacity acts deleteriously in the transmission of electric waves, instead of permitting the flux to travel quickly from one end of the circuit to the other. The flux, although moving with the velocity of light, is rapidly absorbed as it runs in order to fill the dielectric or charge the system. The electrostatic capacity becomes greater as the two conductors are brought nearer to each other, and the impedance of the line increases and offers more charging surface as the dielectric is reduced, or rather, as the distance between the two conductors is diminished, the capacity of the line as a condenser is increased. The waves of higher frequency will suffer more than the lower frequency waves as the higher harmonics are eliminated and the clearness thereby impaired. In cables the two wires forming the circuit are brought very close together, and, hence, the electrostatic capacity is very much increased, being in a submarine cable conductor about .33 M.F. per mile and in a No. 12 copper wire strung at a height of 30 feet above the ground is about .0148 M.F. per mile. Before a current can reach its full strength at the distant end of the line, the line acting as a condenser must be charged to its full capacity, and when reversed currents are used, it must be discharged and charged again at each reversal. This explains why a high capacity is so detrimental to telephone working, as the rapid changes and reversals of the telephone current are deadened and flattened out if they have to charge much capacity before reaching the receiving instrument. For this rea-

Digitized by Google

son long lengths of underground or subaqueous cables are very unfavorable to long distance telephony.

As much effective impedance may be offered by the two or three miles of cable which may be needed within city limits as twenty times that length of overhead wire. Every effort is made to reduce the electrostatic capacity of subterranean cables, and the capacity per loop mile of cable conductors is only about ten times as much as the capacity per loop mile of overhead wires.

ence becomes more marked, the electromagnetic capacity, or inductance, as it is termed, of the conductors forming a circuit increases with their distance from each other.

The effect of electromagnetic capacity or of self-induction always reduces the current strength in the circuit when it is developed in apparatus. As the frequency is increased the inductance in the receiving apparatus becomes larger, though all electromagnetic apparatus must possess inductance in order to oper-

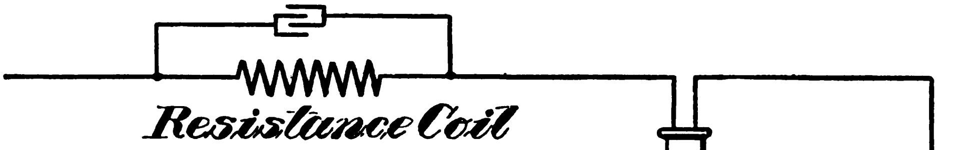

Figure 1.

By the *insertion of a condenser* and the proper distribution of choke coils, the resistance, capacity and induction of the circuit are so *distributed* that the resist-

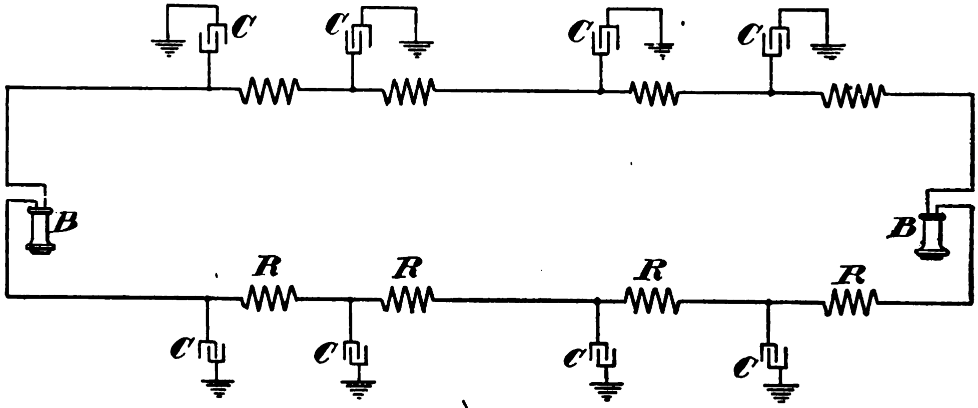

Figure 2.

ance is *equalized* throughout the length of the circuit, and the electrical waves are passed over it practically without distortion.

The fourth factor in the production of impedance is the electro-magnetic capacity or inductive capacity of the circuit, the same influence that produces the choking effect in a magnet or coil of wire. The magnetic flux developed by the movement of the electric flux through the circuits sets up an E. M. F. tending to oppose the development of an alternating current.

As the frequency increases, this influ-

ate, as one devoid of inductance would not be successful, and in one possessing a large degree of inductance a very powerful current could not be produced.

In order to obtain the best results, the instrument must be so that when further inductance is introduced the loudness of the transmitted sound is reduced.

If electrostatic capacity were absent from the line, then electromagnetic capacity or inductance would be as detrimental to current strength as it is when developed in the receiving apparatus, but being associated with the electrostatic capacity of the line, the influence of the one

Digitized by Google

is opposed to the influence of the other, and when properly adjusted, they can be caused to largely neutralize each other.

On page 135 of Webb's Telephone Handbook is shown a diagram, Fig. 1, of the use of a condenser as a telephonic shunt, showing how the transmission of speech of a multiple telephony system would be improved by the use of that arrangement of apparatus.

In Professor Pupin's System he shows how (Fig. 2) this is accomplished by *shunting* the *static electric charge* to *earth* through the condensers c, the retardation coils R, choking the current back and causing it to take that path, thereby diminishing the electrostatic capacity of the cable or line and *balancing* the self-induction of the coil.

As shown in the foregoing, the cable or line acts as a condenser in long distance messages and becomes loaded, forcing it to discharge the current, and causes the electrical waves to become differentially affected or to overlap and become tangled up into each other.

The discovery of wave impedance through a choke coil is also made use of in Wireless Telegraphy, as demonstrated in the use of the multiplicator, which, as Slaby has used it, may increase the potential difference at the end of the extension wire as much as ten times.

There was also patented by Pupin a System of Electrical Transmission by Resonance Circuits, which bears a great similarity to others, and contains condensers in a line and a self-induction coil in *shunt* with this condenser, then an alternating current impressed on the line will under certain conditions be greater in the shunt circuit than in the line itself. The shunt circuit is in this case considered in the light of a step-up transformer.

The author also remembers experiments conducted several years ago by an Independent telephone man with a telephone repeater, wherein practically the same results could be achieved if the inventor had known it.

It would seem that with some combination of repeater and a new arrangement of Professor Pupin's system successful telephonic transmission across the ocean would be possible.

It is far from the author's intention to undertake to minimize the value of Professor Pupin's patent or to discredit him in any manner, but it must have forcibly struck others besides myself upon reading that *first* sentence on page 340 of the Electric Telephone, by Edwin J. Houston and A. E. Kennelly, published in 1896, and then comparing the invention, when it is readily seen that the *principle,* at least, is old. Thanks to the Professor's exhaustive calculations and untiring experiments, the Bell Company was relieved of about $200,000, for which sum they have as yet received no returns, as nothing has been done farther than that plans were under way to connect Florida and Cuba. If this was done, I do not know, as I have been unable to ascertain.

TELEPHONES FOR DIVERS

An important application of the telephone, of which not much has been written, is its use in diving operations. The admiralty were the first officially to recognize the value of the telephone for such work, and their example was quickly followed by the United States authorities, who now incorporate the provision for telephones in the regular specifications for diving apparatus. The diving armor does not differ externally from the ordinary equipment, the telephonic attachments being entirely within the helmet. Each helmet is provided with a cap of stout canvas with a leather chain-strap, one side of which is fastened to the telephone receiver so that it is held securely against the ear and can by no possibility slip out of position. Inside the helmet, in such a position that the diver can speak directly into it by slightly turning his head, is the transmitter. The connecting wire cable, about one-half inch in diameter and heavily insulated, enters the helmet near the top through a watertight valve, which permits it to be immediately disconnected if it is at any time desirable to dispense with the use of the telephone. The diver's assistant is equipped with a similar cap and receiver, and round his chest is strapped a small nickel-plated shield, on which is mounted the transmitter with a funnel-shaped mouthpiece pointing upward, so that he can speak directly into it by slightly lowering his head. Round his waist he carries the

Digitized by Google

battery of five cells enclosed in a neat hard rubber case. It is the work of but a few moments to make the necessary wire attachments and put the little line in working order. Thus equipped the attendant has both his hands free to handle the air-pump or hose, or to comply with any directions that the diver below may telephone up to him. The superiority of the telephone over the old-fashioned signal line used by divers would be apparent if its value in almost all classes of submarine work had not already been amply demonstrated.—*The Electrical Engineer, London.*

RAPID PROGRESS OF ILLINOIS TELEPHONE COMPANY.

FROM THE CHICAGO SUN.

The Illinois Telephone Company is prosecuting its work of tunneling the streets of the city with vigor, and in the absence of an amended ordinance from the city council is keeping to the specifications of the original ordinance. This, however, will necessitate the doing over of some of the work. The officials claim that without a fourteen-foot conduit it cannot install a pneumatic-tube service, as is contemplated, but that work on the tunnel is being pushed at the rate of 300 feet a day, which means its completion in December. The installation of telephones will then be begun and by February 10,000 instruments will be in place.

Some of the work which has been done will have to be done again when the additional rights are obtained. Some of the streets which are to be tunneled for the main conduits have not been touched, but the company has proceeded to get ready for its telephone business independent of the action desired from the council.

"Work has been proceeding at the rate of 250 to 300 feet a day," said Superintendent George W. Jackson. "The downtown conduits will be completed by December, and by February 10,000 instruments will be in use. It will require two years to build the entire system to Sixty-third street on the south and to the extreme western and northern boundaries."

The district first opened will extend to Halsted street on the west, Chicago avenue on the North, and Twelfth on Twenty-second street on the south. The construction of the telephone exchanges where automatic connections will be made is now under way.

The company has abandoned its State street shaft for the removal of dirt on account of the inconvenience to which people in the street were put. The concrete work will be continued from this shaft, but earth excavated will be removed from shaft No. 8 on the river and taken out in scows.

Commissioner of Public Works Blocki said that an investigation of the work now being done by the company has been made on an intimation that "no sneak" was being made on the city.

"The specifications of their present ordinance are being observed," he said.

RIGHTS OF TELEPHONE COMPANIES.

The decision of Judge Weiss in the Dauphin County Court that telephone companies are vested with the power to enter upon private lands as well as upon highways for the purpose of planting their poles and stringing their wires is important. It will serve, if the decision shall stand, to cheapen the cost of construction by enabling the companies to cut across country instead of following the more devious lines of the public roads. Of course, the right to occupy private lands is to be so used as to cause the least injury or inconvenience to the owner, who can obtain such compensation as a jury may award him in case of non-agreement as to the amount of damage.—*Philadelphia Record.*

Clarksville, Tenn.—It will not be long before Clarksville will be the field for a telephone war "right." The Clarksville Home Telephone Company has organized with $100,000 capital stock and is daily receiving material with which to begin the work of constructing its system here. The officers of the new company are as follows: H. C. Merritt, president; B. F. Gill, vice-president; Wesley Drane, treasurer; Dancy Fort, secretary and general counsel.

Broken Bow, Neb.—Frank H. Young, F. M. Rublee and thirteen others have incorporated the Central Telephone Company of Broken Bow, with an authorized capital stock of $35,000.

Digitized by Google

THE TELEPHONE: THAT POTENT FACTOR IN HUMAN AFFAIRS.

By Fred DeLand.

Delvers into the history of the races that lived in the dawn of time are describing conditions indicating an advanced state of civilization that is said to have existed ten thousand or possibly twenty thousand years ago, and of so remarkable a character that a corresponding period may have elapsed during its attainment. Yet countless though these delvers into the hidden mysteries of past ages be, none has ever found carved in stone, graven on image, written in manuscript, engraved on parchment, or printed on paper, one word, sign or symbol showing that the longing for a method and means to orally communicate over long distances had ever been satisfied. Nor has any searcher ever found such a method delineated in wildest dream of Arabian or Persian writer, or forming a part of the fabled equipment in fairy tales of yore. And not until the closing quarter of the Nineteenth century was the problem of practical speech transmission solved and an electric-speaking telephone evolved that enabled mankind to converse over long distances—a telephone that was the practical realization of the dreams of more than three hundred generations who longed and planned and worked for a method and a system of communicating thought and desire over intervening space.

Thus the telephone is not the invention of some ancient magician, hoary with age and burdened with the knowledge of the needs of the world, but of a young and thoughtful human being intent on a labor of love. Combined with a simple magnet and a bit of wire, the brain of a thinker evolved the telephone that has revolutionized the ways of the world of commerce, of industry and of society.

No piece of mechanism devised for public service is so simple or so free from electrical and mechanical complications, and none seemingly involved in such mystery, so little understood, its inestimable worth valued so lightly by the inexperienced, or its wide field of usefulness utilized by so many with so little intelligence and comprehension of its almost infinite breadth and scope. Forgotten is the fact that after ages of searching, this mighty change in system and method has been wrought within a quarter of a century, and few realize how enormous is the saving to the individual in time and travel, how multitudinous are the steps saved, how less crowded the streets and highways, now that dependence is placed on that swift and silent and secret and serviceable servant, the telephone.

The instrument on the wall or desk bears the same relation to telephone service that a knife and fork bear to an excellent dinner. Both are necessary adjuncts. Combined with the knife and fork is the planning of the gracious hostess, the talent of the chef, the wisdom of the butler, the mechanism of the pantry and kitchen, and the palatable food so daintily served. So back of the telephone are endless miles of wire, thousands of poles, millions of jacks, inventive talent constantly at work improving every important detail, engineers analyzing the accumulated knowledge and experience gained in the brief quarter of a century, deducting facts therefrom and planning new methods and supervising new construction; managerial ability and executive talent unexcelled in any line of industry; all combined with the wisdom and the ways and means of the financier. Hundreds of millions are invested in pole lines, copper circuits, switchboards, equipment and buildings, and within five years the total investment may exceed a billion of dollars. Yet thirty years ago telephone service was unknown. And an age ago mighty potentates would have bartered half their kingdoms for the service now common to kitchen and country home, to mill and market.

Never a servant so silent, so serviceable, and so swift as the telephone and its twin wires. Yet how lightly we esteem this service so essential in our daily life, this "most potent factor in human affairs." Often we rail at the seemingly slow operator, when a glance at the second hand of our watch shows that "Central" responded within ten seconds. Does butcher or baker or grocer learn your needs in ten seconds? Do we rail at the clerk in the postoffice or railway station or department

Digitized by Google

store if our needs are unasked during ten times ten seconds? As often there are others before us at office and store, so "Central" has a line of applicants rapping at her ear. "Central" can serve all local callers on an average of less than three seconds each, after their wants are made known. Where is the clerk who can serve and satisfy customers at the rate of twenty a minute? Yes, "Central" occasionally makes the error of placing the plug in the wrong jack and giving the wrong connection; but the mail clerk drops Brown's mail into Black's box, and the dry goods clerk sends No. 36 for No. 30 thread.

But where is the worker who for rapidity, deftness and infinitesimal error can compare with the trained and disciplined "Central?" Stand in front of a switchboard and observe how alert "Central" is, how quickly her nimble fingers connect jack and plug the moment the shutter falls or the lamp gleams. Observe, too, how in saying, "Number," she talks directly into the transmitter, not to one side or above or below, but squarely into the transmitter. Do you face the transmitter squarely when you telephone? "Central's" enunciation is clear and distinct and she has learned to talk into a telephone properly, plainly and to the point. Have you ever thought how "Central" is playing the low hand in a three-handed game in which she has no control over her opponents? The calling subscriber leads at will, whether "Central" is ready or not, and, regardless of the needs of others who are calling "Central" at the same moment, demands instant following, while the called subscriber takes his time in coming into the game, often necessitating a second or third call from "Central." In other words, the character of local telephone service is dependent in a full two-thirds degree on what subscribers make it, rather than on what the trained and disciplined "Central" supplies.

Telephone service really is mainly what the subscribers consciously or unconsciously make it. A few dilatory subscribers can cause much annoyance during the busy hours and lower the general average of efficiency of the service. Watch the crowd securing tickets at the railway office during the rush hours on a suburban railway. Men who are slow in making their wants known, slow in paying, slow in picking up change and tickets and passing on, hinder rapid, desirable service, and cause distress of mind to many who fear they will lose the train.

Now there is always a crowd filing before Central during the busy hours. To be dilatory in responding to the telephone call is to cause others to fume and wonder why Central is so slow. To annoy or needlessly trouble or to "rattle" Central is to cause a decided fall in the average efficiency of the service, as well as loss of time to many. Even to wish Central "Good morning; I hope you are feeling well," is to slow down the service, a trifle only, to be sure. But how few trifles are required to lower the general efficiency!

Courtesy and fair play are not dead terms, but synonymous and live expressions. Strange are the bypaths in the broad realm of discourtesy into which the telephone user may easily drift, unless mindful of the little courtesies that enrich life. To keep the calling friend waiting at the door the architect planned, is a grave discourtesy, yet reflects only on the service of your own household. But doubly discourteous is failure to respond promptly to the caller at the telephone door. For the latter has little or no redress, the delay not only entails waiting on the caller's part, but increased work and watchfulness for Central. It also lowers the average efficiency of the entire service, leads the caller to unjustly blame Central, and ties up both circuits and thus serves to shut out other callers who desire to enter through the telephone door of either the calling or the called subscriber.

TO SAVE TIME.

Without waiting for council action on an amended ordinance the Illinois Telephone Company has pushed forward its tunnel construction and will have the down-town conduits finished by December. By that time, it is asserted, the installation of telephones will have been begun, and the promise is made that by February 10,000 instruments will be ready for use.—*National Hotel Reporter, Chicago.*

Digitized by Google

KANSAS INDEPENDENT TELEPHONE ASSOCIATION SECOND ANNUAL CONVENTION.

FROM THE KANSAS CITY STAR.

The convention of the Kansas City State Independent Telephone Association opened at the Coates House at 10 o'clock this morning. Every seat in the banquet-room of the hotel was occupied when President A. R. Champlin of Newton, Kans., called the meeting to order.

About 250 owners, officers, and operators of independent telephone exchanges in Kansas are members of the association. With the members of the association came many dealers and manufacturers of telephone supplies and representatives of trade papers. The parlor floor of the Coates House looked this morning like a corner of an electrical exposition. Nearly all the larger manufacturers of telephone instruments had exhibits. Several small telephone exchanges were in working order this morning.

The convention was held in Kansas City at the suggestion of the promoters of the Kansas City Home Telephone Company, the company that is building a plant here, ostensibly to oppose the Missouri and Kansas company, generally called the Bell company. At the meeting this morning E. L. Barber of Wausean, O., and James S. Brailey, Jr., of Toledo, O., the principal promoters of the Home Telephone Company here, mingled with the Kansas telephone men and introduced Mayor Reed to them.

"We will have the plant of the Kansas City Home Telephone Company in operation by July 1," said Mr. Brailey this morning. "This convention was called here for the purpose of bringing the many 'independent' telephone exchanges in the state of Kansas in closer harmony with the independent movement in Kansas City. We are going to build an independent plant here regardless of the opposition of the Bell company. We have built forty-six independent telephone plants in the United States, and not one of them has been sold to the Bell company."

Mayor Reed made a short address of welcome. He told the telephone men that he favored the government ownership of every instrument in the United States. That part of the mayor's speech was received in silence, for the delegates in the convention are nearly all capitalists and owners of telephone plants.

THE MORNING SESSION.

At the morning session committees on credentials, revision, and resolutions were appointed, the secretary and treasurer submitted reports, and applications for membership were received. The following is the programme for this afternoon:

Corrections and additions to state toll line map.

Paper—"Construction and Maintenance of Metalic Toll Lines," by Harry Faris, Concordia.

Paper—"Enforcement of Message Time Limit," by W. W. Dilworth, Beloit.

Salina—By D. A. Van Trine.

Atchison—By Ed H. Berry.

Topeka—By B. F. Pankey.

Wichita—By Hon. Frank L. Brown.

Kansas City—By James S. Brailey, Jr.

There will be no evening session tonight, as the delegates will be entertained at the Willis Wood theater by the Kansas City Home Telephone Company and the Kansas City dealers and manufacturers of electrical supplies.

Among the representatives of manufacturers of electrical supplies and telephone instruments attending the convention are:

G. H. Lutz and H. N. Faris, Kellogg Switchboard and Supply Company, Chicago; S. J. Bear and E. W. Barnes, American Electric Telephone Company, Chicago; P. J. Hertz, Illinois Electric Specialty Company, Chicago; F. E. Rotchka, Sterling Electrical Company, Lafayette, Ind.; C. W. Bartlett, Stromberg-Carlson Telephone Manufacturing Company, Chicago, and W. O. Rhode and E. B. Overshiver, president Swedish-American Telephone Company, Chicago.

TOLD BY THE CENSUS BUREAU.

Taking the United States as a whole, the census report shows that one person in every forty has a telephone. San Francisco leads the world in the generality of telephone use; there every one in twelve has a telephone. In the one year of 1900 more than $10,000,000 was spent in telephone apparatus.—*Chicago Journal.*

Digitized by Google

OUST BELL SPIES

Sensation in Convention of Independent Telephone Men.

BITTER FEELING AGAINST MONOPOLY

All Outsiders Excluded from Yesterday's Business Session.

Mayor Reed in Welcoming Address Strongly Denounced Telephone Trust as Represented by Missouri and Kansas Corporation.

FROM THE KANSAS CITY JOURNAL.

Telephone men who operate independent exchanges—i. e., those not identified with the Bell monopoly—are in convention in Kansas City now. They met to the number of fifty or sixty yesterday at the Coates house, held two sessions and went to the theater last night. They will hold their final sessions to-day, and for entertainment will look over the work so far done on the Kansas City Home Telephone Company's plant. This consists of conduit construction only. If the weather permits the company will have men at work placing its various sorts of conduits, notably the paper pipes which it has found cheaper and preferable to tile work. Ditches are open in several parts of town which the visitors will inspect, and they will there watch the work of installation. This is to be made something of a feature of the convention; in fact, the convention itself in one sense is a "boost" for the Kansas City independents, for it is of Kansas men and should have been held by rights in that state. But members decided to come here to show their faith in the Kansas City company which it is believed will connect up with the independents in other states as well as Kansas City when its exchange is installed.

The convention yesterday was a strictly business affair. It began in the banquent rooms of the Coates house, and was called to order at 10:30 o'clock by President A. L. Champlin of Newton, Kas. Mr. Champlin made a brief address of welcome and then introduced Mayor Reed, who has been the champion of the Home company, and who proceeded to take a few layers of hide off the Bell company, which is just now his bete noir. In the course of his address the mayor said:

The present conditions of the telephone business are lamentable. If relief is to come to the people it must come either from legislation of the most radical character or through an intelligent union of independent systems, managed along honest lines and by honest men. That, of course, leaves out the Bell company, which is nothing better than a pirate.

There should be only one company. That should be owned by the government, be connected with the postal service and its phones should be in every farmhouse in the land. We may never reach this, and in the meantime must try to meet present conditions. The Bell company, which never did an honest act in its life, takes out of Kansas City, at a low estimate, $300,000 annually and swears to the assessor that the value of its entire property in Jackson county is $22,000.

I will not extend to you the liberties of the city, for I know that if you have occasion to use a Bell telephone you will violate at least one of the commandments, if not the laws of the state.

It is the hope of the people of Kansas City that the new company forming here will solve the problem. It never has sold out and I don't believe it will. It will connect with every independent line in Kansas and Missouri that desires connection and the people of your cities and of Kansas City will receive mutual benefit. Your efforts should be towards such a consolidation as will give good service and relieve from the present oppressive rates.

W. H. Nelson of Smith Center replied to the mayor on behalf of the visitors. After thanking him for his welcome, Mr. Nelson assured him that the Kansas independent people would do their part toward the building up of the new company here.

Following this, the various committees were named for the work of the session, reports were heard from the secretary and treasurer, and from the committee on credentials. Applications for admission from new members and their election followed.

When the convention reassembled, which was about 2:30 o'clock, Hugh Dogherty of Indiana began a report on some suits which independent people are defending for violation of patents, the suits being inspired by the Bell people. He had proceeded some little ways in his report, showing that money was badly needed for the prosecution, when a sensation was sprung. A delegate arose and said:

Digitized by Google

"Mr. President, I have never attended a convention of the Bell people, nor have I ever been asked to one. Yet I notice some representatives of our arch enemy here. I move you, sir, that this convention go into executive session and that all friends of our opposition be removed. Let the unwashed go."

Loud applause greeted this sally, and the motion carried. Thereupon all outsiders were ignominiously sent out, amid cheers. And as Bret Harte said:

The subsequent proceedings interested them no more.

During the afternoon the matters considered, all behind closed doors, related to the private affairs of the convention largely. The program, which was not all carried out, included papers on the construction and maintenance of metallic toll lines by Henry Faris of Concordia and on the message time limit by W. W. Dilforth of Beloit, with a discussion by representatives of various exchanges.

The secretary's report showed that 85 per cent of the larger independent companies belonged to the association now. He listed twenty-five new ones yesterday. Frank Brown of Garnett talked on the Wichita plant, which has about driven the Bell company out, and detailed the war between the city and the Bell company. B. F. Panky told of the Topeka plant and Mr. Brailey of the new one just installed by them at Toledo.

A notable feature of the convention is the displays of instruments, exchanges, and materials, which fill the parlor floor of the Coates house. These are very fine, several working exchanges being installed. Phones from the common ash construction to others of polished ebony and teakwood are shown.

TO SHOW ITS INDEPENDENCE.

Secretary Wells, of the Association, Investigated Home Co. Unknown and Proved the Case.

Perhaps the present convention of independent telephone companies was not held to vindicate the good faith and independence of the builders of the Kansas City Home Telephone Company, but if it wasn't—and there is nothing to show that it was—it certainly did that. The establishment of this fact was the one feature of yesterday's executive session, and it accounts thoroughly for the requesting of emissaries of the Bell company to leave the room. Certainly the proof accumulated by Secretary Wells, of the association seems good.

The persistent rumors that the Home people were merely putting up a job to hold up the Bell company here and then pull out, which have followed the Home company ever since it came here, have worried the Kansas independent companies considerably, for on the successful operation of the Home company depends their entrance to Kansas City. Therefore, at the last semi-annual meeting, Mr. Wells took it upon himself to inquire into the status of the backers of the Home company, Colonel Barber and J. A. Brailey, unknown to them. He wrote to places where they had operated, and others where they are known, with the result that when he arose yesterday to make known his findings, he had a bunch of a dozen letters from men of recognized standing, which settled the matter and put the Home people in the highest standing with the convention, and called forth strong applause. Mr. Wells read these letters in the executive session, and they were a surprise to Mr. Brailey himself.

Perhaps the strongest evidence, to the mind of Mr. Wells, at least, of the independence of Mr. Barber was contained in a long letter from John A. Armstrong, director in the First National bank of Louisville, and president of the Home Telephone Company there. Louisville went through just such a season of doubt as has Kansas City, and in Mr. Armstrong's reply—which was called out not by a letter to him, but by one to the bank's president—he says:

When I went into the independent field, I acted as cautiously as I could in selecting my associates, and finally decided . . . that Messrs. Barber & Brailey were thoroughly reliable. They were perfect strangers to me and you can readily see that my investigations were all the more thorough on that account. . . . They have carried out every point and in many respects have exceeded their contract. At the recent national association meeting in Philadelphia, of which I am a member of the executive committee, Mr. Barber was prominently mentioned as president, and at his urgent request was withdrawn. . . . When I first began my investigations, various emissaries of the enemy volunteered information that I had better be cautious for fear that the Bell company would get behind all these schemes of Barber & Brailey. . . .

Digitized by Google

I see by your letter that the same old tactics are being worked in Kansas City. . . . They come from the same old source. In no instance have they ever sold a plant to the Bell people.

Mr. Armstrong volunteers the names of others who can substantiate his statements and calls the two "the strong right arm of the independent movement."

J. D. Powers, of the National Trust Company, of the same city, after telling at length of the exchange they installed there, says:

We unhesitatingly say that no better friends of the independent telephone movement can be found in the United States than they. . . . They have kept their obligations in every respect.

S. P. Sheerin, president of the New Long Distance Company, of Indianapolis, writes:

Barber & Brailey are consistent, independent telephone people and so far as I know, thoroughly reliable and responsible. . . . It seems to me ridiculous that they should be charged with collusion with the Bell people. You are at liberty to use this letter.

H. P. Crouse, editor of the Toledo Times and the Toledo News, says:

I know them and I am sure that the stories and rumors that they are secretly working in the interests of the Bell people are absolutely false. . . . Nothing could be farther from the truth.

J. J. Robinson, cashier of the Ohio Savings Bank and Trust Company, of Toledo, a director in the Home company of that city, writes:

At a recent meeting, there was a suggestion from Messrs. Barber & Brailey as to the pooling of our stock for a number of years and the stockholders were asked to name the conditions of this pool. This certainly is not an indication of coalition

Letters fully as clear and strong were read from the Lexington, Ky., Herald, the mayor of Wellington, O., and several others. All of them contained similar statements.

When Mr. Wells was done, Mr. Brailey was perhaps the most surprised man in the room, as he had had no intimation of what had been done. He was called on for a speech and he made a short talk, thanking Mr. Wells for his work and telling of his appreciation.

HE'S WITH SAM CAMPBELL.

J. E. Baird Asks the Belligerent Hotel Clerk to Co-operate With Him in a War on Poor 'Phones.

To the very bad service it gives on party lines, the Missouri and Kansas Telephone Company can attribute the last loud wail about its "rottenness." If it had not, when J. E. Baird, at 514 pink, called for a number, connected him, instead of with his office, with the Savoy hotel—a totally different number, in another part of town—he and Sam Campbell, the cashier there, would perhaps never have had a chance to air their woes and get together. Sam, it will be remembered, last week refused to pay for his party line service, because, he said, it was "too rotten," and dared the company to take his 'phone out, saying that it would be an admission of its inability to better the service if it did.

Mr. Baird wanted to talk with someone and asked for the number. When he heard a "hello" in reply, he asked who was there.

"Sam Campbell," came the startling reply. "Who's that?"

"A fellow sufferer," said Mr. Baird. "I have heard of you. You are the man with nerve enough to beard the 'phone company. Good for you! I'm with you. Here I've been howling away for a number for an hour, and I get you. I wonder if Satan has at last deserted his own and has thrown us together for the vengeance of wrath. Say, old man, I like your nerve."

"Thank you," said Sam, modestly.

"And I'll tell you what let's do. Let's get out a petition and canvass the South Side and ask the Bell company to take out every 'phone on our side of town. This is simply more than a fellow can stand."

"I'll consider it," said Campbell.

"Do," said Mr. Baird. "It has cost me a nickel to talk to you, and it will probably cost me a quarter to get the fellow I want, if I ever do, but that nickel was the best investment I ever made."

"They haven't taken my 'phone out yet," said Campbell, last night. "No, I haven't decided about the petition; I'll wait and see how they come out with me, I think, first. One war at a time."

Digitized by Google

MONTHLY DIGEST OF TELEPHONE AND KINDRED PATENTS.

EDITED BY ARTHUR F. DURAND, OF THE CHICAGO BAR.

Copies may be had, postage paid, by enclosing 5 cents for each one. Address inquiries in care of this magazine or to the Commissioner of Patents, Washington, D. C.

JOSEPH LYONS, CHARMIAN, PA. No. 705,685, July 1902. TELEPHONY.

This is another scheme for augmenting telephonic currents, and is an improvement upon the invention described in Patent No. 606,762, issued July 5, 1898, to Hutin and Leblanc. Mr. Lyons was formerly an Examiner in the Electrical Division of the Patent Office. The claims in this patent are drawn to cover the method or process, while in another patent Mr. Lyons has claimed merely the apparatus for accomplishing the desired end. The method or process employed by Mr. Lyons consists in causing the telephonic currents to establish an initial magnetic field or fields, the lines of force of which intersect circuits which are closed upon themselves, and in producing relative movement between the field structure and closed circuits, such movement exceeding in speed the number of periods in the telephone current of highest frequency, divided by half the number of poles in the field. The patent is assigned to the American Telephone & Telegraph Company of New York. Mr. Lyons' description is as follows:

Referring now to Fig. 1, there is shown a local circuit containing a microphone M, a battery B, and the primary P of an induction-coil. The secondary S of this induction-coil is connected with the line L L L, having a magneto telephone-receiver R at the distant station. This line is here shown as grounded at both ends; but it will be understood that it may be a complete metallic line and that it may be either overhead or underground or submarine. At two points *x y* this line is tapped by wires *l l*, leading to and completing the circuit of the field-coils of a reinforcing alternating-current generator of the Hutin and Leblanc type above referred to. This reinforcing-generator G is ordinarily composed of a stationary iron field-ring having inwardly-projecting radial pole-pieces *n s*. The pole-pieces are wound alternately reversed and are here shown as connected in series (although they may be connected in multiple arc), so that a current which produces in one pole-piece a north pole will produce in the next succeeding and in the next preceding pole-piece a south pole. This is indicated in the drawings by the letters *n s*.

The rotary part of the reinforcer is ordinarily made of an iron ring, faced on each side with a flat annulus A, of copper, and the iron ring as well as the two copper rings are perforated, so as to receive copper pins, rods, or bars *p*, riveted at each end to the copper rings; all in the manner now well known, and set forth in detail in the Hutin and Leblanc patent above referred to. The copper rings A A, together with the pins *p*, form a great number of electric circuits of low resistance closed upon themselves, and this system is secured upon a spider, as indicated, and the whole is mounted upon a shaft *q*, carrying a pulley *t*, around which passes a belt *u*, by which motion is given to the shaft from any suitable source of power.

The system as thus represented is operated as follows: Speech uttered against the microphone M causes alternating electric currents to be generated in the secondary S of the induction-coil. One branch of these currents passes through the field-coils of the reinforcing-machine by the conductors *l l*, and another branch passes to the line L L. Both current branches are exceedingly weak, and the branch passing to the line is too weak to cause an audible reproduction of sounds in the telephone-receiver R if the line exceeds a certain length; but if now the rotor of the reinforcing-machine is rotated with such speed that its number of rotations per second exceeds the number of periods of the currents due to the sound of highest pitch that is uttered against the transmitter divided by half the number of poles of the field then the initial and exceeedingly weak alternating field excited by the telephone-currents is reinforced, and these currents themselves are

Digitized by Google

reinforced. This reinforcement of telephone-currents may be carried practically to any desired extent, depending upon the size and speed given to the reinforcing generator and also depending upon the electromagnetic reactance of the reinforcer. This reactance should be made as small as practicable, and for this purpose the amount of iron entering into the construction of the machine should be made very small, and the iron, if employed at all, should be highly laminated, as is that speech can be transmitted over very long lines with the same loudness as is now attained upon comparatively short lines.

In Fig. 2 the main line is divided into two parts L L and L′ L′, connected inductively by the induction-coil P′ S′. In a branch *l l,* derived from the line L L, there is a reinforcing-machine G, and in a branch *l′ l′*, derived from the line L′ L′, there is another similar reinforcing-machine G′. This division into sections,

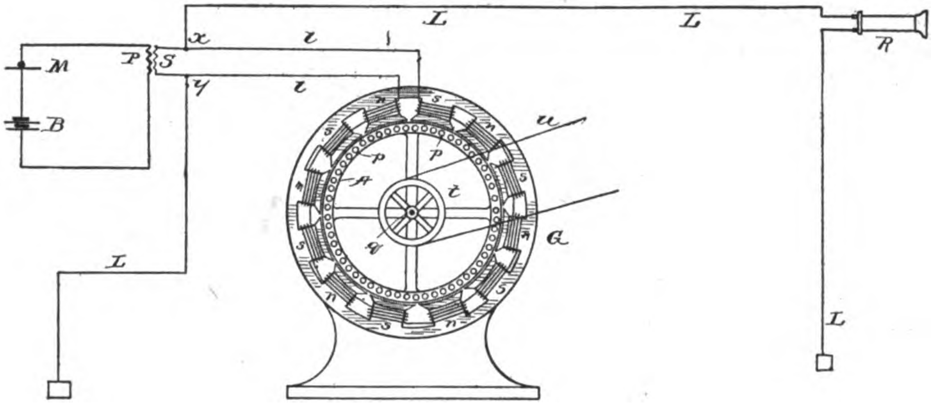

Fig. 1.

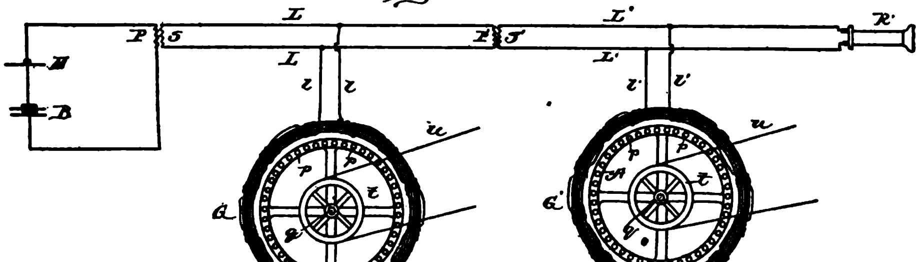

Fig. 2.

706685—Telephony.

usual with machines of this character. I will be understood that the reinforcing machine may be in series in the line instead of in a branch derived therefrom.

In the ordinary system of telephony the faintness of the telephone-currents is due to the great apparent resistance of the telephone-circuit, and for this reason telephony can only be successfully practiced over comparatively short lines. With my improved system there is no practical limit to the length of the telephone-line, since whatever that length may be its apparent resistance is so largely reduced by the reinforcing operation which may be carried much farther, permits the use of small reinforcing-machines upon moderately long sections of lines and the practice of telephony over very long distances. When a line is thus subdivided into sections, it is not necessary that each section be either completely metallic or grounded. Some sections may be completely metallic, and others may be grounded. Nor is it necessary with this arrangement that the two or more reinforcing-machines be all driven at the same speed. It is all sufficient if each machine is driven above the critical speed above indicated. So long as this

Digitized by Google

rule is observed it is immaterial what the speeds of the reinforcing machines are.

While my invention is well adapted for use in connection with the ordinary magneto telephone-receivers, it is preferable to use telephone-receivers without iron or steel cores, and, similarly, it is preferable to use induction-coils without iron cores. Altogether the electromagnetic reactance of the system should be made as small as possible.

I desire it to be understood that I am not confined to the use of the reinforcing-machine hereinbefore indicated, and particularly described in the Hutin and LeBlanc patent, No. 606,762, since I may use any other reinforcing-generator operating to reduce the reactance of the line and of its appurtenances for the various frequencies of telephone-currents. It will also be understood that instead of rotating the closed circuits these may be stationary and the field-magnet structure be rotated; also, that I may omit the iron cores entirely or retain them either in the stator or in the rotor of the reinforcing-machine.

In the practice of telephony it has been observed that speech can be transmitted with sufficient distinctness even though some portions of the sounds uttered against the transmitter are not faithfully reproduced or are altogether lost in the receiver. Particularly is this true when some of the sounds of highest pitch are lost. This being the case, it is in my system not absolutely necessary that particular notice be taken of the alternating currents of the highest frequencies that occur in the transmission of speech. In other words, it is not absolutely necessary to reinforce these very highest frequency currents. It is practicable to lose the sounds corresponding to them without materially affecting the clearness of reproduction. This enables me to rotate the rotor of the reinforcing-machine with lower speed than would be necessary if it were attempted to reinforce all high-frequency currents.

It will now be understood that wherever I speak in the foregoing description and in the claims of the highest-frequency currents that occur in telephonic transmission or that are thrown upon the line I mean those highest-frequency currents which are still essential to the intelligible reproduction of the sounds uttered against the transmitter.

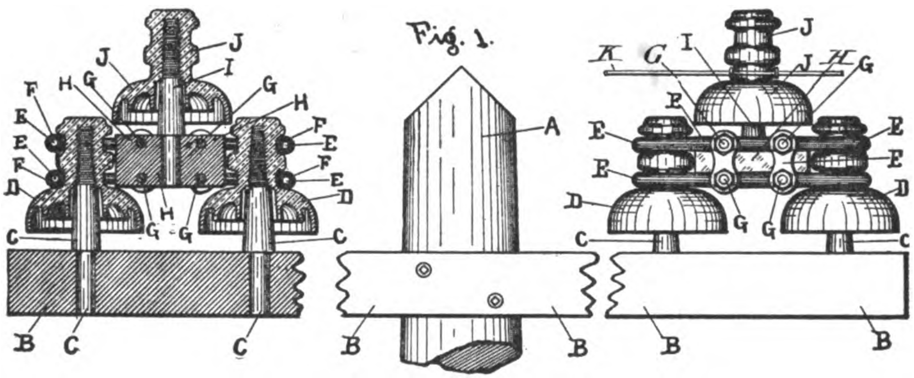

705811—Insulating Support for Metallic Circuits.

JOSEPH LYONS, WASHINGTON, D. C. No. 705,686, July 29, 1902.

This is a patent for the apparatus shown and described in Mr. Lyons' other patent. As explained, in the first patent, Mr. Lyons claims the process or method which he employs for augmenting the telephonic currents, while in this patent the claims are drawn merely to cover the particular apparatus.

JOHN SCOTT ALLEN, LOS ANGELES, CAL. No. 705,811, July 29, 1902. INSULATING SUPPORT FOR METALLIC CIRCUITS.

The invention in this case consists of an improved insulator support. It consists, first, of the cross arm fixed upon a pole and provided with a couple of pins. With the arrangement shown, there is an insulator on each pin. The construction

also involves a core interposed between the insulators and connected with the latter by means of a yoke. This core is provided with a pin upon which is mounted a third insulator. The conductor is secured to the third insulator, as shown in the drawings.

W. M. ENGLISH AND G. A. BURNS, SAN FRANCISCO, CAL. No. 706,169, August 5, 1902. ANTISEPTIC TELEPHONE MOUTH PIECE.

This is a mouth piece constructed with double walls and an intervening space adapted to provide a circulating chamber for the vapor or fumes of the antiseptic. The inner wall is provided with a number of openings 4, through which the vapor or fumes of the antiseptic may pass for the purpose of disinfecting the inner sur-

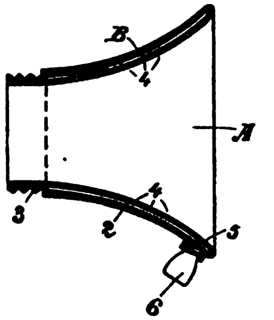

706169—Antiseptic Telephone Mouth Piece.

face of the mouth piece. The antiseptic or sterilizing material is held in the receptacle 6, which is screwed into the opening 5.

J. H. FARNHAM, deceased. No. 706,308, August 5, 1902. TELEPHONE CIRCUIT.

This is the invention of Isaiah H. Farnham, who assigned his rights to the New England Telephone & Telegraph Co. of New York. The patent was issued to Marcia J. Farnham, of Wellesley, Mass., his administratrix. This invention relates to what are commonly known as "phantom" circuits, and consists in not only twisting the conductors of each metallic circuit, but also in twisting the pairs of conductors which constitute the phantom circuit, so as to increase the circuit capacity of the cable, and so to obtain completely balanced circuits in each of the units in their relation with one another, and also in relation to any heavy currents traversing the conductors strung in proximity to the cable, so as to quiet the different circuits, the phantom and metallic circuits being twisted in opposite directions.

Fig. 1 shows in a simple way the invention with one unit B composed of the two pairs *a* and *b* of paper-insulated conductors in a lead sheath A. (Shown in dotted lines.) Each pair, consisting of two conductors 1 2 and 3 4, respectively, are first twisted together with a right-handed twist, and the two circuits *a* and *b* are then twisted to each other with a left-handed twist. If desired, the twists may be reversed—*i. e.*, *a* and *b* may each be twisted to the left and then the two twisted to the right. The twisted unit B has wound around it a cord or thread 5 to hold the conductors together, usually of a distinctive color. At each end of the cable the conductors are represented as connected to the poles of the telephones t and t^2, respectively. Between the conductors of each of the two metallic circuits is bridged an impedance-coil 7, and from the center 1 of the coil-windings wires 8 extend to the poles of the telephone t^3 to form a third or phantom circuit, of which the pair *a* form one side or limb and the pair *b* the other side.

Fig. 4 represents in diagram the windings of the impedance-coils 7, the helices of which are wound on in parallel, and the outer ends 9 and 11 are connected to binding-posts, while the inner ends 12 and 13 are connected to the bridging-post 10, and the circuit from 9 is from the binding-post 10 by one winding and from said post to 11 by the second winding. In operation the currents from the signaling instruments t in, say, the circuit *a* circulate through the helices of the coil-winding in series and have an inductive effect upon the core of the coil, while the currents from the signaling instruments t^3 circulate by the connecting branch 8 to the center of the helices of the coils and thence through the said helices differentially to the circuits *a* and *b* and have no inductive effect upon the cores. The coils are thus wound so that a perfect balance is obtained between the two conductor metallic circuits *a* and *b* and the third or phantom circuit *c*.

The usual way of making up telephone cables whose conductors are insulated by

Digitized by Google

paper is, as has been referred to hereinbefore, to twist the pairs of conductors together and the arrange them in reverse layers within the cable-length. In the experiments that were made previous to this invention it was found impossible to

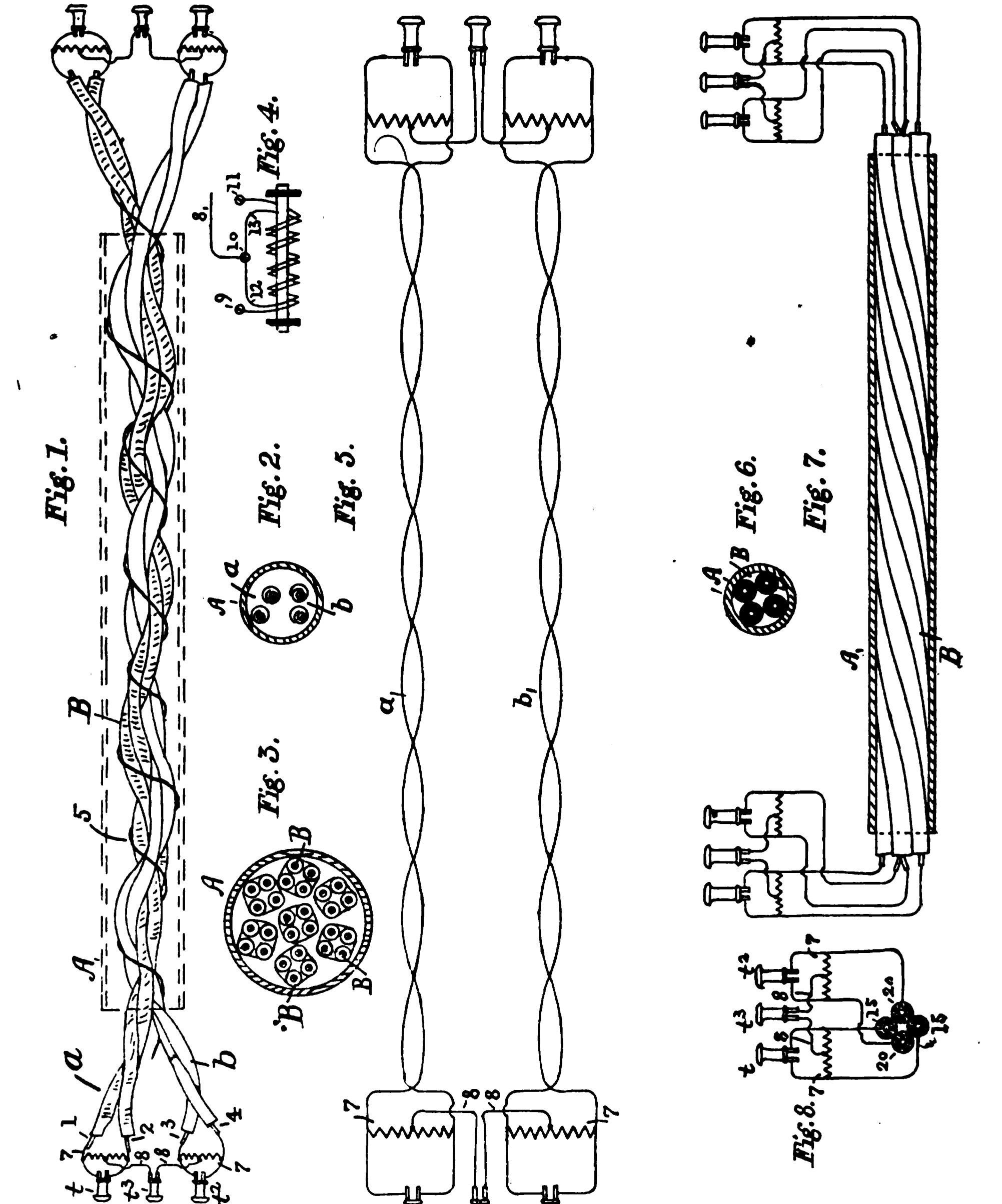

obtain quiet phantom circuits between the pairs of metallic circuits thus arranged, as there would in all cases be more or less "cross-talk;" but by the formation of two pairs of such metallic circuits into units it has been found that phantom circuits connected between the pairs of such units are quiet and without perceptible cross-talk or disturbances of any kind.

Fig. 2 is an end view of the unit shown in Fig. 1, and Fig. 3 is an end view to show a plurality of units in a sheath.

Fig. 5 shows a similar circuit to that shown in Fig. 1 in diagram. The two

circuits *a* and *b* are supposed to be twisted to each other with a reverse twist, to which each are separately twisted, but for the illustration are not so shown.

In Figs. 6, 7, and 8 the sheath A incloses a unit of two pairs of conductors, all of which are wound together, and the opposite conductors 15 15, forming the circuit *a*, are connected with the telephone *t*, and the opposite conductors 20 20, forming the circuit *b*, are connected with the telephone t^2, and the coils 7, bridged between the conductors of the circuits, are connected from their centers to the telephone t^3 to constitute the phantom circuit.

MARTIN H. HOWELL, MELROSE, MASS. No. 706,319, Aug. 5, 1902. TELEPHONE CIRCUIT.

This patent covers an improvement upon the Farnham invention previously described. This patent is also assigned to the New England Telephone & Telegraph Co., of New York. Mr. Howell substitutes repeating coils for the impedence coils of the Farnham patent, and claims that in this way he secures a better balancing of circuits and more satisfactory results all around. The invention relates more particularly to the construction and arrangement of the impedence coils. Mr. Howell's description of his invention is as follows:

Fig. 4 shows a repeating-coil I, which is very effective in operation when used as illustrated in Figs. 5, 6, and 7 and exercises no retarding effect to the passage of telephone-currents entering at split or point 27, where the phantom circuit is introduced. The helices of the coil are composed of four conductors, 31, 34, 32, and 33, which are preferably twisted together, and their right-hand ends are respectively brought to the screw-posts 28, 30, 27, and 29, and the left-hand ends are brought to the screw-posts 25, 28, 26, and 27 respectively, so that each conductor passes through the coil in two windings in series with one another, the points 27 and 28 being in the center of each of the two windings. Both sides of the coil are balanced and are symmetrical.

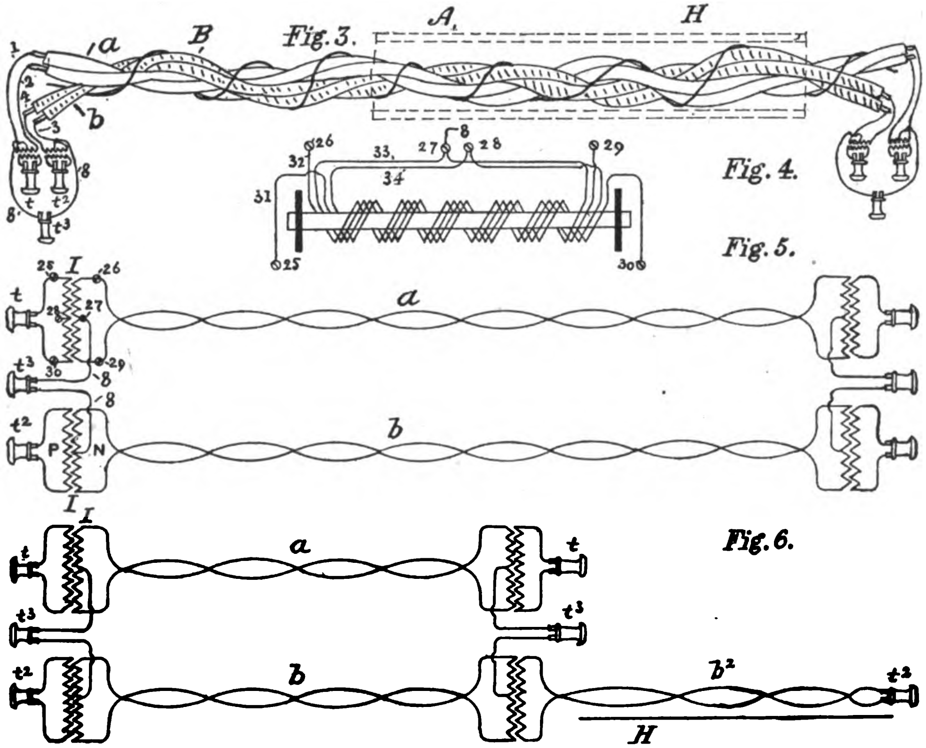

706,319—Telephone Circuit.

Digitized by Google

The extensions or conductor 8 from the point 27 on the side N of the coils I at each end of each circuit connects with the telephone t^3, and the conductors of the circuit a terminate at the screw-posts 26 and 29, respectively, and the terminals of the local telephone-circuit are secured in the screw-posts 25 and 30 of the side P of the coils, so that the circuit a is one side or limb and the circuit b the second side or limb of a phantom circuit having the instruments t^3 at each terminal. It will be understood that the telephones shown are merely symbolical and simply represent regular telephone outfits. In the operation of the phantom circuit current passes from the telephone t^3 to the point 27 of the winding N of one of the coils I associated with the circuits a and b—say a—where it divides, a portion going through the helices of the coils in opposite directions, coming out at the points 26 and 29, and then continues over the conductors of the circuit to the corresponding points 26 and 29 of the winding N of the coil I at the opposite end of the circuit and traversing the helices in opposite directions comes to the point 27 and to the telephones t^3, from which it continues by a similar route of that just described over the circuit b to the home end of the circuit.

As the current splits at the point 27 and goes in opposite directions through the helices, as described, one side neutralizes the other, and therefore no inductive effect is produced in the core, and consequently there is no disturbance in the telephone t or t^2 at either end of the circuits, and when the telephone t or t^2 is used the generated currents enter the P winding of the coils I and traverse the same in series, and an inductive effect is produced in the core of the coil, and similar currents are induced in the winding N of the coil which circulate in the helices thereof in series and are propagated over the conductors 1 and 2 of the circuit and pass through the helices of the winding N of the coil I at the opposite end of the circuit and are inductively transferred to the winding P, through whose helices they circulate in series, and are received by the telephone in the local circuit of the winding.

For convenient description I prefer to represent the end circuits P, which include one winding of the repeating-coil, in series with the telephones t and t^2 as local circuits, but the said circuits may be of any extension, and also to refer to the intervening circuit as the "main" circuit.

Fig. 6 illustrates what frequently happens in telephone construction—the combination of a short circuit a and a comparatively longer circuit b b^2, located in the vicinity of a power-circuit. In the figure the power-circuit H is shown in proximity with a portion of the extension b^2, and if the conductors of the circuits are properly transposed all of the circuits, including the phantom circuit, will be free from inductive disturbances and quiet because of the perfect balance secured by the repeating-coils.

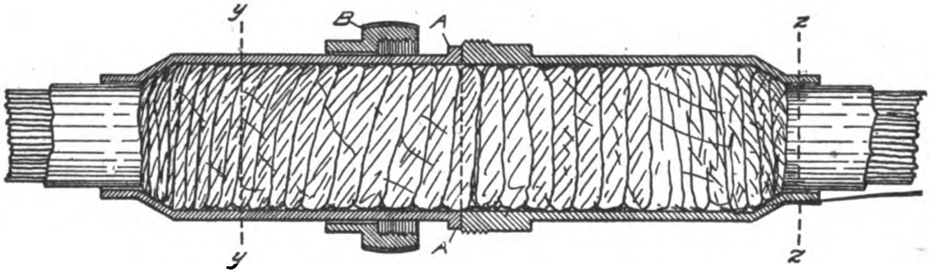

706,567—Telephone Cable Connection.

THOMAS P. JONES, OLYPHANT, PA. No. 706,567, Aug. 12, 1902. TELEPHONE CABLE CONNECTION.

As described, the splice is first wound with water-proof paper, and the two sleeves of the coupling are then slipped over the joint and coupled together by the threaded coupling ring B. The inventor claims that in this way he provides a coupling which is not only water-proof but which affords ready and convenient access to the joint.

Digitized by Google

Frank B. Cook, Chicago, Ill. No. 707,-049, Aug. 12, 1902. Terminal Box for Protected Electrical Circuits.

This is the patent for the well-known form of cable head. It is equipped with both heat coils and carbon lighting arresters. Switch springs and contact strips are also provided for allowing any of the heat coils when operated to close an alarm circuit. The box, as described, is of metal and this box can be grounded, so as to conduct the trespassing currents to earth. The form of heat coil employed is the same as that described in the previous number of the Telephone Magazine. The claims, however, are not limited to any particular form or construction of heat coil, but are drawn to cover the general construction and organization. The patent describes the invention as follows:

As thus illustrated my invention comprises a box or inclosure A, which is preferably rectangular in form and of some length and which is also preferably provided at its opposite ends with the bosses or tubular portions a and a', adapted to provide openings respectively for the switchboard and line conductors. The top of the box preferably consists of a lid or cover a^2, adapted to be secured in place by screws, substantially in the manner shown in Fig. 3. The metal strips a^3 and a^4 are preferably secured along each side of this cover and can be provided with indicating members or numerals, as shown in Fig. 1 and as will hereinafter more fully appear. The thermal protectors employed are arranged in two rows or series at each side of the box. Each thermal protector consists, preferably, of a heat-coil B, having heads b, adapted to engage notches or openings in the upper ends of the springs b' and b^2. These springs, it will be observed, are secured to the side of the box by the binding-posts b^3 and b^4. The binding-post b^3 is also adapted to support the spring-jaw b^5, while the binding-post b^4 is adapted to support the arm or spring member b^6. A second jaw b^7 is arranged to oppose the jaw b^5, and the carbon blocks of the lightning-arrester C are held firmly between these two jaws. It will be seen that both the binding-post devices are thoroughly insulated and that a dielectric or strip of insulation is arranged between the two carbon blocks of the lightning-arrester. The springs b' and b^2 are adapted to project upwardly through a long strip of insulation D, which is mounted upon the side of the box. By referring to Figs. 1 and 5 it will be seen that this strip of insulation is provided with a number of openings to permit the proper amount of play or movement on the part of said springs. It will also be seen that a metal strip d is secured to the outer edge of this strip of insulation and that a similar strip d' is secured to the inner edge thereof. This construction is duplicated at each side of the box, as shown in Figs. 1 and 3, each lightning-arrester being arranged to serve in conjunction with a heat-coil or thermal protector device and each com-

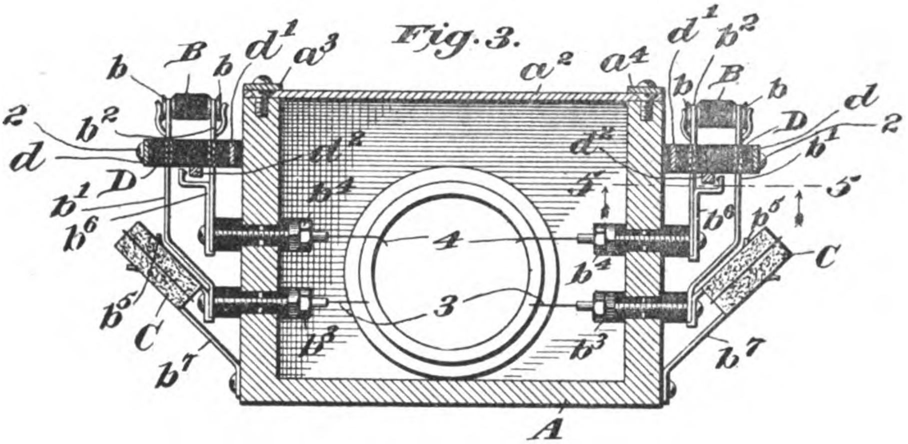

707,049—Terminal Box for Protected Electrical Circuits.

Digitized by Google

bined heat-coil and lightning-arrester being secured to the side of the box by a pair of binding-posts. By referring to Figs. 3 and 5 it will also be seen that each strip of insulation D is provided at its under side with a metal strip d^2. The line-wires can be arranged in the usual cable form and can be spread out and distributed through the interior of the box, so as to permit their ends to be soldered or united to the line binding-posts b^3. The switchboard-conductors can be led in a similar manner through the opening in the opposite end of the box and can have their end portions united to the switchboard binding-posts b^4. Thus each heat-coil or thermal protector is located in a line-circuit and is arranged to respond to the action of excessive current for the purpose of disrupting the circuit.

The circuit arrangement is shown in Fig. 6. In this view it will be seen that the line conductor X is connected with the springs b' and b^5 and that the switchboard-conductor Y is connected with the springs b^2 and b^6. The spring b^7 and also the metal strip d are both preferably grounded at Z. The metal strip d^1 and the bar d^2 can be connected with the visual indicator 1. With this arrangement and as shown in said Fig. 6 the passage of an abnormally large current over the line will cause the heat-coil to release the springs upon which it is supported. The spring b' in engaging the strip d establishes connection between the line and the ground. The springs b^6 and b^2, engaging the strips of metal d' and d^2, close the normally open circuit, including the visual indicator 1. Thus the heat-coil when operated not only disrupts the circuit and establishes connection between the line and the ground, but also operates to close a local circuit through the signaling device. It will also be seen that lightning discharges can pass from the line through the carbon blocks and thence to the ground.

If the high-potential current is only of a transient character, the momentary arcing will only pierce the dielectric between the two carbon blocks, allowing the current to pass to earth. However, should the current be of some duration then the arcing will burn away the dielectric, thereby allowing the carbons to come together, so as to establish a positive connection or conducting-path to earth. In this way any of the heat-coils shown are capable of producing a gap in one of the line-circuits and of simultaneously therewith establishing connection with the ground. Futhermore, as explained, the operation of any one of the heat-coils is accompanied by a signal or alarm. In this way the attendant can readily and

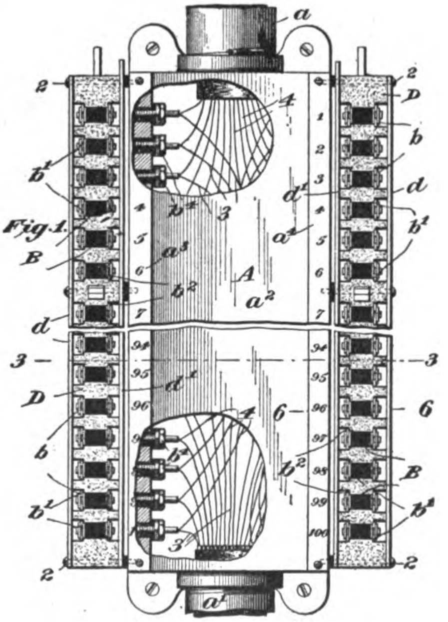

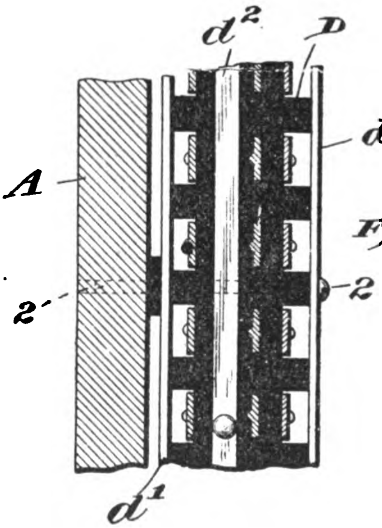

707,049—Terminal Box for Protected Electrical Circuits.

Digitized by Google

quickly locate a thermal protector as soon as it is operated. Each heat-coil is readily removed from the springs upon which it is supported. The construction of these heat-coils is described and claimed in my aforesaid original application. For this reason and for the further reason that these devices are well known in the art I have not shown and described any special form or construction. In fact, the thermal protectors shown and described can be of any suitable form or construction.

The box A can be of any suitable material. For example and in order to simplify the circuit connections, it may be and the box to the grounded conductor. As shown the binding-post b^3 and b^4 are, like the box, made of metal and are preferably insulated and arranged in rows of series. Line-wires 3, passing in at one end of the box, preferably connect with the lower rows or series of binding-posts, while the switchboard-wires 4, passing in at the other end of the box, connect with the upper rows or series. This facilitates the making of connections and the repair of the various devices. The numerals or numbers on the strips a^3 and a^4 may correspond to the number of thermal protectors employed.

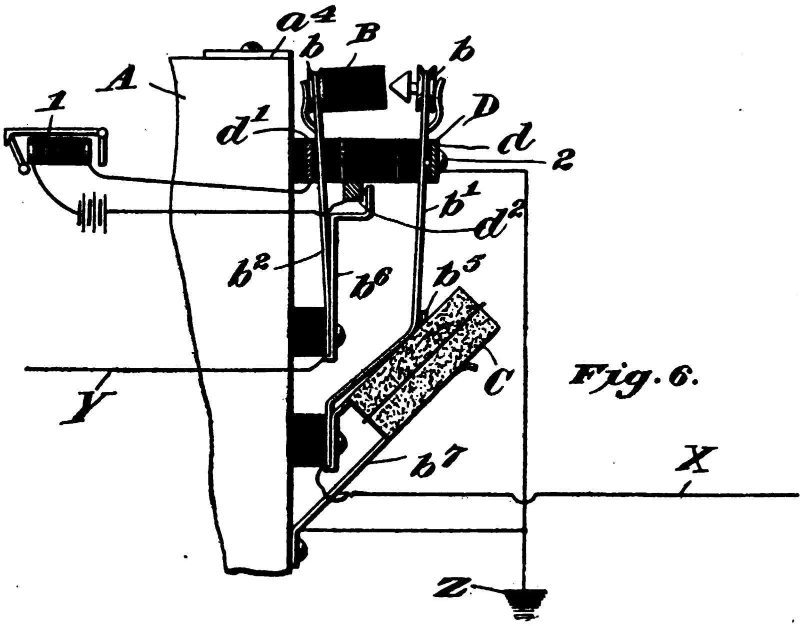

707,049—Terminal Box for Protected Electrical Circuits.

constructed of cast-iron or other metal. In this way the grounded connection or circuit can include the box. The contact-strips d can be secured to the box by means of screws 2. The spring-jaws b^7 of the lightning-arresters are, as explained, preferably secured directly to the box, as shown. Thus the box can be grounded, and lightning discharges will jump to the ground through the metal of the box. This will also be the case with respect to excessive currents, the thermal protectors when operated establishing connection with the ground through either one of the strips d and thence through the screws 2

Frank B. Cook, Chicago, Ill. No. 707,050, Aug. 12, 1902. Electrical Protector Set.

In this case, the invention consists of a compact and self-contained subscriber's protector set, and involves a pair of carbon lightning arresters arranged in conjunction with a pair of the heat coil devices described in connection with Mr. Cook's other patent. The claims, however, like those of the patent just described, are not limited to any particular form of heat coil, but are drawn to cover the arrangement and organization of lightning arresters and thermal cut outs

Digitized by Google

into a compact and self-contained device, which is a well known portion of the Cook protective apparatus. Mr. Cook's description is as follows:

My invention comprises a suitable base A, which may be of porcelain or any other suitable material and which is adapted to serve as a support for the various binding-posts, springs, posts, carbon blocks, heat-coils, etc., involved in the structure. The said base is preferably provided with an annular groove or channel *a*, adapted to receive the circular lower edge or perimeter of the cover B. This cover is preferably of glass and, as will be observed, can be in the form of a dome. The top of the said cover is preferably provided with an opening *b*, adapted to receive the upwardly-projecting post C. As illustrated, the said post rises from the center of the base and its upper end portion is threaded to receive a clamping-nut *c*. This nut, it will be seen, bears upon the top of the cover B and keeps the latter properly seated in the groove or channel *a*. It will also be observed that this post is formed with a shoulder *c'*, upon which rests the flat strip or block of insulation D. A metal plate E preferably rests upon this strip or block of insulation, the said plate being provided with a horizontal portion *e*, having an opening *e'* adapted to receive the reduced threaded portion of the post C. In this way the other nut c^2 can be arranged to clamp both the plate E and the block of insulation D firmly upon the shoulder *c'*. This plate E is also preferably formed with a lower horizontal portion e^2, having an opening e^3. The bolt of the binding-post F can be arranged to pass through this opening e^3, and the said post can in this way be employed for clamping the lower portion of the plate in place upon the base A. With respect to the use of this plate as a means for partially supporting the lightning-arresters its lower edge can be formed with shoulders or ledges e^4, adapted to provide seats or resting-places for the lower ends of the carbon blocks G. With respect to the use of this plate as one member of a spring-switch for grounding an abnormally large current its upper edge can be provided with contact-points e^5, adapted to make contact with the flexible posts or springs H. These posts or springs are, it will be observed, preferably provided with base portions *h*, having the opening *h'* and h^2, and also with the upwardly-projecting portions h^3. These portions h^3 co-operate with the plate B in holding the lightning-arresters.

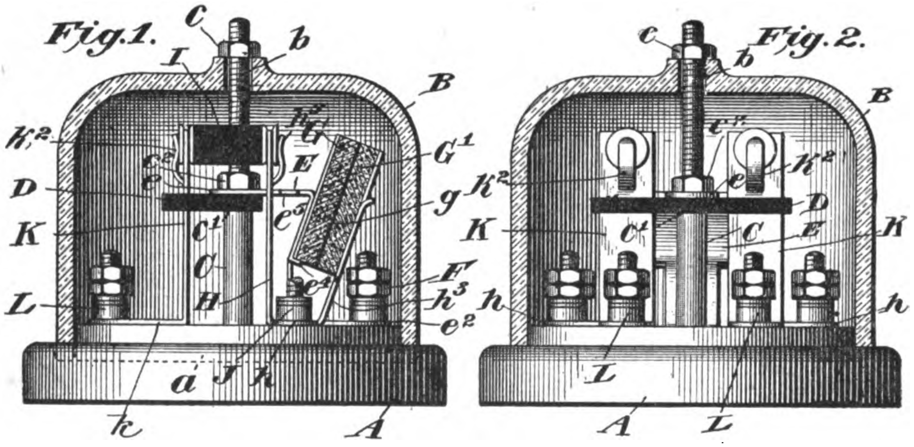

707,050—Electrical Protector Set.

This will be understood more clearly by referring to Figs. 1 and 5, where it will be seen that the carbon blocks G and G' are held firmly between the said portions h^3 and the back or outer surface of the said plate E. Strips of insulation—as, for example, the layers of silk *g*—can be arranged between the carbon blocks, thus constituting the lightning-arresters. In this way the best plates or spring-like members H are adapted, as will be seen, to not only partially support the heat-coils I, but to also partially support the carbon blocks of the lightning-arresters.

Digitized by Google

In addition these spring posts or members H are, as will hereinafter more fully appear, adapted to serve as a spring-switch for establishing connection between the line and the ground. The openings h' are adapted to receive the bolts of the binding-posts J. These binding-posts are in use preferably connected with the line-wires. Openings h^2 can receive small screws adapted to assist in securing these sprink-like members to the base A. The upper end of each post or spring H is preferably provided with a notch h^4 and also with a small tongue or portion h^5. Arranged opposite these posts H are a couple of similar posts K. The said posts K can be provided with base portions k, having openings adapted to receive the bolts of the binding-posts L.

In this way the said binding-posts L, which are in use. preferably connected with the instruments of the subscriber's telephone set can be employed, like the other binding-posts previously described, for securing the post K firmly upon the base A. Like the springs H, the posts K preferably have their upper ends provided with notches k' and also with tongues or small portions k^2. It will also be seen that the posts K are arranged to rise through openings in the strip or block of insulation D. In this way the posts K are practically held against movement, while the flexible posts or springs H are capable of more or less movement toward and away from the posts K. The said heat-coils I can be of any suitable form or construction, but are preferably provided with heads or end portions adapted to engage the notches in the upper ends of the posts H and K. If desired, the internal construction of these heat-coils can be similar to that described in my aforesaid application. For this reason and in view of the fact that these heat-coils have attained a definite status in the art I have not shown or described any particular form or construction.

As thus constructed the device is adapted to serve as a protector in a complete metallic circuit. With one line-wire connected to one of the binding-posts J and with the other line-wire connected with the other binding-post J the heat-coils I will constitute part of the circuit and will serve as medium of electrical connection between the instruments and the line conductors. In this way all currents traversing the circuit pass through the heat-coils, it being observed that each heat-coil is connected up in series with the two posts upon which it is supported. The binding-post F can, as stated, be connected with the grounded conductor. With this arrangement a current only slightly in excess of normal will cause either one or both of the heat-coils I to operate and to produce a break or gap in the circuit. Either heat-coil in releasing one of the springs H will establish connection with the ground, inasmuch as either of said springs when released will make contact

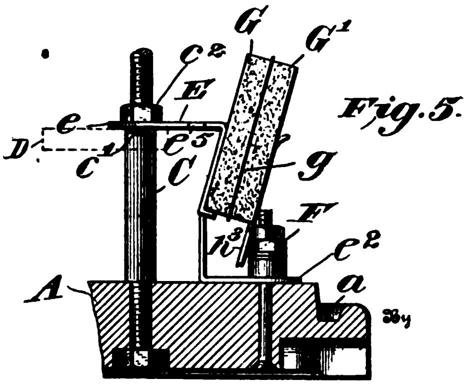

707,050—Electrical Protector Set.

with the plate E. This plate being grounded, the abnormally large current will then be conducted to earth.

Should the trespassing current be of a different character, however—as, for example, such as would result from a lightning-stroke or severe electrical storm—then the carbon blocks involved in the two lightning arresters shown will serve as the medium of electrical connection between the line and the earth. In other words, the presence of the high-potential current on the line will cause the insulation or silk dielectric G in either arrester to burn away, and thereby allow the two carbon plates to come together. If the current is only transient, the momentary arcing from one carbon plate to the other will leave the silk practically intact; but, as explained, if the current is sufficiently strong it will burn out the silk and allow the two carbon blocks to

Digitized by Google

come together. Thus it will be seen that the heat-coils and lightning arresters are arranged in a compact and readily-accessible manner. The post C serves not only as a means of clamping the dome-shaped cover B in place, but also as a partial support for the protecting devices. The springs H are normally held under tension by the heat-coils, but when released make contact with the plate E. In this way the post C may also serve as a means for resisting the pressure of the springs H upon the plate E. The wires to be connected with the binding-posts can be inserted through the openings X in the base. After a heat-coil has been operated by an abnormally large current the glass cover can be readily removed, and a new heat-coil can then be substituted for the old one.

The portions h^3 are springy in character and hold the carbon blocks firmly in contact with the plate E. Thus the post C, it will be seen, also serves to resist the spring tension of the said portion h^3. In fact, the said post C not only serves as a means of clamping the cover in place, but also as a means of centering the various plates, springs, etc., and of holding the same against any displacement which might be due to the spring tension or to accidental bending of the different parts.

FRANK B. COOK, CHICAGO, ILL. No. 707,051, Aug. 12, 1902. SYSTEM OF STRONG CURRENT PROTECTION.

This patent covers an arrangement and organization of Mr. Cook's heat-coils and lightning arresters and fuse protectors into a system for protecting telephone instruments against the different kinds of trespassing currents. It also covers an arrangement whereby the burning out of any one of the heat-coils, which are arranged in banks, will be accompanied by a visual signal and an audible alarm. The audible alarm gives notice that a heat-coil has been burned out, while the visual signal points out the particular bank in which the burned-out coil is located. The invention is described as follows:

My invention comprises a subscriber's telephone set A, which, it will be understood, can be of any suitable known or approved form. At the central exchange the line conductor B, extending from the subscriber's set, terminates in the usual spring-jack or switchboard-socket *b*. As shown in Fig. 1, it will be seen that the said line-wire is preferably secured to an insulator *b'* at the subscriber's station and a similar insulator b^2 at the central exchange. The fuse-protector C preferably has its upper end clamped upon the line-wire at a point adjacent to the insulator *b'*. A conductor *c* preferably leads from the lower end of this fuse-protector to the switch-spring *c'*. The connection is then completed to the subscriber's telephone through the medium of the heat-coil D and the post or spring member *d* and the conductor *d'* The carbon blocks of the lightning-arrester E are preferably held between the spring switch member *c'* and the stop *e*. This stop is adapted to limit the movement of a portion of the spring-switch *c'*, which supports the heat-coil—that is to say, when the spring *c'* is released by the disrupting of the heat-coil. At the central exchange another fuse-protector F, preferably like the fuse C, is clamped upon the line-wire at a point adjacent to the insulator b^2. This insulator can be mounted upon a pole X, having a pole-top terminal *x* at its upper end. With this arrangement the conductor *f*, leading from the lower end of the fuse F, can have its other end connected with a binding-post within the said pole-top terminal, and the connection to the switchboard can then be continued through the medium of the conductor *f'* This conductor *f'* preferably leads to a plate or spring-jaw f^2. The carbon blocks of the lightning-arrester G are preferably arranged between this jaw f^2 and a similar spring-jaw f^3. The latter jaw is, it will be seen, preferably grounded at Y. At this juncture it will also be seen that the stop *e* is also preferably grounded at Z. The heat-coil H, employed in conjunction with the lightning-arrester G for protecting the switchboard apparatus, is preferably mounted between a spring-jaw *h* and a similar sprink-jaw or post *h'*. The latter is, it will be seen, preferably provided with a bent portion h^2, adapted when released to make contact with the bar h^3. When the heat-coil is disrupted, the movement of the spring *h* is limited by a stop h^4, while the movement of the spring *h'*

Digitized by Google

is limited in a similar way by a stop h^5. The stop h^4 is preferably grounded at Y, while the stop h^5 is connected with one pole of a signaling-battery h^6. The spring-jaw h' is connected by a conductor h^7 with the aforesaid spring-jack B. The bar h^3 is connected with the visual indicator I by means of a conductor h^8. The other pole of the battery h^6 is connected with the visual indicator by means of the conductor h^9. The said visual indicator may consist of an ordinary drop, relay, or other like signaling device. The two contact-points i and i' are preferably associated the circuit the operation of the heat-coil will also establish connection between the line and the ground. In case of lightning the high-potential current can descend to earth at Z through the carbon blocks of the lightning-arrester E, the current arcing from one block to the other. Should the high-potential current be of sufficient duration, the arcing will burn out the dielectric between the two carbon blocks, and thus establish a positive connection between the line and earth.

In a similar manner the fuse F at the central exchange is adapted to burn out

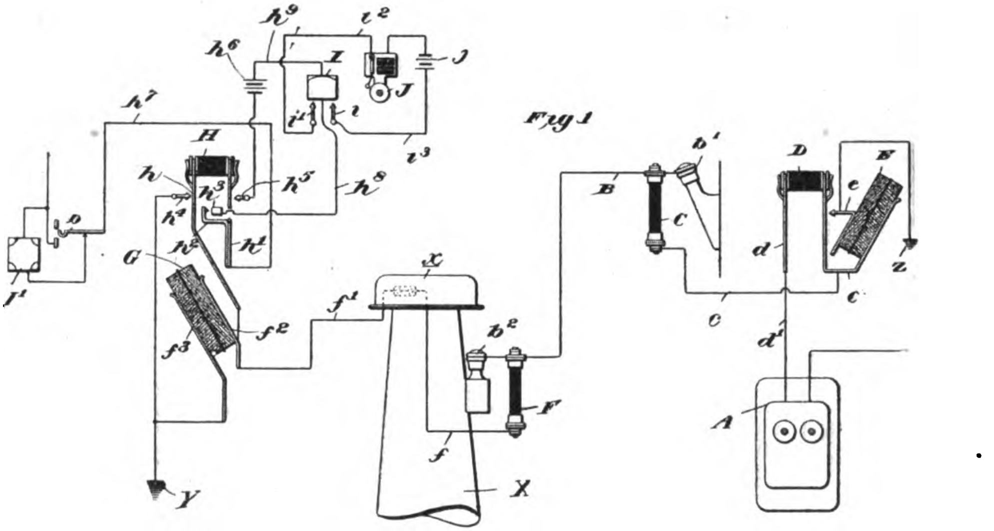

705,051—System of Strong Current Protection.

with this indicator and are connected by the conductors i^2 and i^3 with the audible or general alarm J. It will be seen that a signaling-battery j is preferably located in this normally open local circuit of the audible or general alarm.

Now should an excessively large trespassing current show its presence on the line near the subscriber's station the fuse C will be burned out and will in this way disrupt the connection between the line and the subscriber's telephone set. Again, should the trespassing current be only slightly in excess of the normal or, as it is sometimes called, a "sneak-current," then the coil D, comprised in the thermal protector device, will be disrupted, allowing the spring c' to make contact with the stop e. Thus in addition to disrupting under excessive current and in this way sever the connection between the main-line conductor and the switchboard apparatus. Also, as in the previous case, the heat-coil H is adapted to respond to trespassing currents only slightly in excess of normal and to disrupt the circuit and at the same time establish connection between the line and the earth at Y. Lightning-discharges will arc across from one block of carbon to the other in the lightning-arrester G, or, as previously explained, will burn out the dielectric between the two blocks and descend to earth through a positive connection. When released by the disrupting of the heat-coil H, the spring h' and the arm or bent portion h^2 close the local circuit including the visual indicator I. This indicator

Digitized by Google

when operated closes the normally open circuit including the audible alarm J.

In large exchanges it is preferable to arrange the heat-coils H in banks or sections, substantially as shown in Fig. 2. With this arrangement a visual indicator can be allotted to each bank or section, and the arrangement can be such that the operation of any heat-coil in said section will cause the said signal to be displayed. For example, as shown in Fig. 2, the visual indicator K, which is similar to indicator I, previously described, is allotted to the bank or section of heat-coils shown at the right. In this section or bank of heat-coils shown at the right the bar 1 corresponds to the stop h^5 (shown in Fig. 1), the bar 2 corresponds to the stop h (shown in Fig. 1) and the bar 3 corresponds to the stop or member h^3 (shown in Fig. 1). In said Fig. 2 the visual indicator L, arranged alongside of the indicator K, is allotted to the bank or section of heat-coils shown at the left. In this second bank or section of heat-coils the bars 4, 5 and 6 are similar in function to the previously described bars 1, 2 and 3. The bars 7 and 8 correspond to the contact-points i and i' in Fig. 1 and are in the normally open circuit including the aforedescribed battery j and the audible signal or alarm J. The local circuits of the two visual indicators K and L are provided with batteries k and l, which correspond to the battery h. (Shown in Fig. 1.) Thus it will be seen that should any of the heat-coils in the bank or section to the right be operated the local circuit including the visual indicator K will be closed, causing it to in turn close the local circuit including the general alarm J. In a similar manner the disrupting of any heat-coil in the bank or section to the left will cause the operation of the visual indicator L, which latter will inturn cause the operation of the said general alarm J. Thus the sounding of the general alarm indicates that a heat-coil in one of the sections has been burned out or disrupted. The attendant then observing the display of one of the visual indicators understands that the disrupted heat-coil is located in the bank or section allotted to such visual signal. In this way it is comparatively easy to locate the burned-out or disrupted heat-coil, even though a visual indicator is not provided for each separate heat-coil.

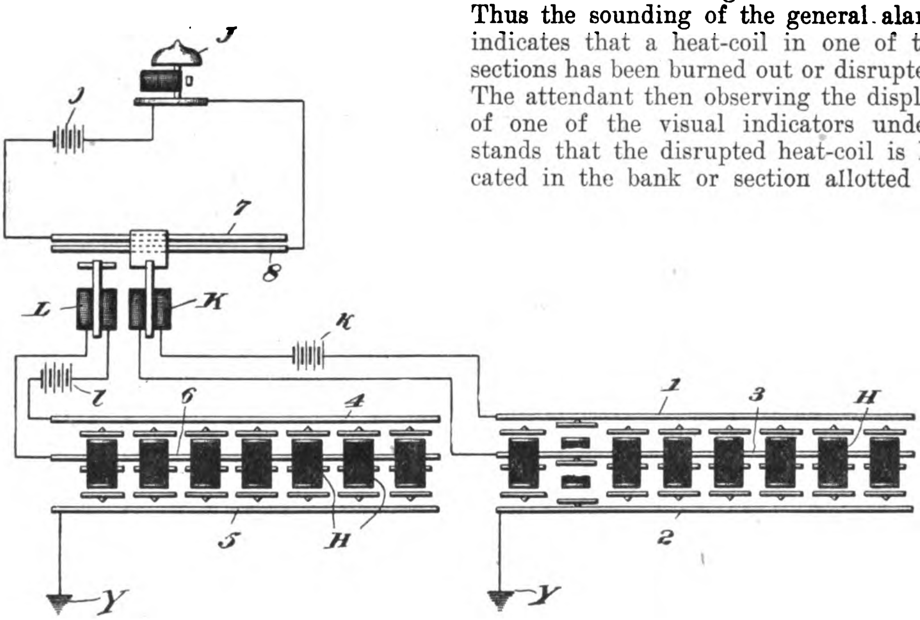

707,051—System of Strong Current Protection.

It will be readily understood that the various protectors herein shown may be of any suitable form or character. Preferably, however, the heat-coils are of the form and construction described in my said original application; but as fuses, heat-coils and lightning arresters are well known in the art I have not illustrated any particular form or construction in either case. It will also be understood that the various signalling devices can be of any suitable or approved form.

Digitized by Google

LEMUEL MELLETT, SOMERVILLE, MASS. 707,441, Aug. 19, 1902. TELEPHONE RECEIVER.

This patent is assigned to the American Octophone Company at Boston, Mass. As stated, the object of the invention is to improve both the acoustic and the electro magnetic properties of the receiver. This the inventor claims to have accomplished by arranging a number of springs radially around the magnet back of the diaphragm. The inventor's description and theory are as follows:

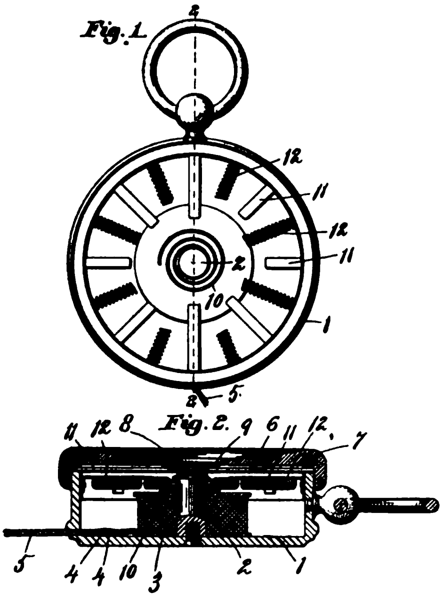

707,441—Telephone Receiver.

1 is a cup-shaped steel casing, in the center of which is fixed a steel magnet-core 2, surrounded by a wire bobbin or winding 3, having electrodes 4 4 united in a cord 5, which passes outside of the casing through a hole in the latter. The casing 1, core 2 and winding 3 constitute a polarized electromagnet having one pole at the free extremity of the core 2 and the other pole at the free annular edge of the casing 1.

6 represents a soft-iron diaphragm having its edges in contact with the rim of the casing 1 and its center close to but out of contact with the end of the core 2.

7 is a vulcanite cover screwing on the casing 1 and having a central hole 8 to expose the diaphragm. It will be noted that the edges of the cover 7 do not screw down tight against the edges of the diaphragm 6, so as to clamp said diaphragm, but are removed a distance therefrom, so as to leave the diaphragm loose.

Making the receiver-magnet with an annular pole-piece in the manner described effects several objects. First, it provides for a deeper air-column and one of greater volume behind the diaphragm than is ordinarily obtained, and this increases resonance; second, since there is but one pole-piece back of the center of the diaphragm the flux of magnetic lines of force is more concentrated upon the diaphragm than with two pole-pieces of the requisite size located behind the diaphragm center, and a better vibratory effect is thereby obtained; third, no loss in magnetic effect is observed, but a gain, since the wide removal of the poles from each other compels practically all of the lines of force to pass through the diaphragm 6 and since also there is but a single air-gap in the magnetic circuit—namely, that between the diaphragm 6 and the end of the core 2. By leaving the edges of the diaphragm free a greater area of said diaphragm is utilized than where said edge is more or less rigidly clamped. My construction does away with the necessity or desirability of suspending the edges of the diaphragm between felt or other yielding washers, since the attraction of the annular pole-piece underneath said edge affords a sufficient anchorage for the edge of the diaphragm without adding appreciably to the rigidity of the central portions away from said edge.

The center of the diaphragm 6 is shown as supported between two conical coiled springs 9 10, whose adjacent ends abut opposite sides of the diaphragm, while their remote ends are confined, respectively, by the cover 7 and the top of the bobbin 3. The outer spring 9 counteracts the outward pressure of the inner spring 10; but the inner spring opposes the attractive force of the magnet-core 2 and keeps the diaphragm from being drawn against said core. The diaphragm is thus in a measure suspended in space by the springs 9 10, and I am enabled to use a thinner diaphragm and bring it closer to the magnet-pole than is the case where the rigidity of the diaphragm is relied on to hold it

Digitized by Google

away from the magnet-pole. A thinner diaphragm will vibrate more freely in all portions, and thus give better acoustic effects.

In the space behind the diaphragm 6 I locate a series of harmonic vibrators 11 12, having their outer ends secured to the side wall of the casing 1 and their inner ends left free to vibrate and directed radially inward toward the center of the casing. These vibrators, which are shown both in the form of reeds and of small helical springs, are of different lengths, so as to emit different fundamental tones when vibrated, and are shown as sixteen in number, corresponding to two octaves. A greater or less number of vibrators may be provided or vibrators of a different character. When the diaphragm 6 is set in vibration by a magnetic impulse received in the electromagnet, emitting a given tone or tones, one or more of the vibrators 11 12 will be sympathetically or consonantly vibrated and will have the effect of reinforcing and perpetuating the vibration of the diaphragm, and thus increasing the loudness of the tone emitted thereby. In connection with a receiver of this character the best results are obtained by employing a transmitter constructed as described in a patent, No. 667,546, granted to me Feb. 5, 1901, and tuning the vibrators in each instrument alike.

INDEPENDENT TELEPHONE PROGRESS IN THE SOUTH.

THE TELEPHONE MAGAZINE has received from F. C. Toepleman, general manager of the Henderson Telephone Company, Henderson, N. C., a copy of the Directory of Exchanges and Toll Stations of the Henderson, Carolina, Telephone and Telegraph, Carolina and Virginia and Interstate Telephone Companies. It is the most complete and elaborate directory ever published, containing in addition to the subscribers' lists of the several exchanges a large amount of important, valuable, and interesting information for the benefit of the subscribers and the public in general.

Under the title of "Long Distance Service," very complete and detailed instructions are given and suggestions made to users of toll service. They include everything necessary for the subscriber to know in order to insure prompt and efficient service from the exchange.

Following the very explicit information about "Calls Charged," "Collect Messages," "Length of Call," "Rates and Charges," "Collection of Toll," "How to Make a Toll Call," "Messenger or Appointment Calls," and "How to Talk," comes a list of cities and towns in North Carolina and Virginia, which are now connected by copper metallic circuits and can be reached from the subscriber's own telephone.

The map showing the extent of territory covered by the toll lines and the number of subscribers may afford the readers of THE TELEPHONE MAGAZINE some idea of the telephone business in that section. The lines shown on the map indicate a total of over 2,000 miles, upwards of 1,300 of which are owned and operated by the companies which Mr. Toepleman has the honor to manage. A large per cent of these lines is copper metallic, the longest being 300 miles, from Chase City, Va., to Beaufort, N. C.

The most attractive and interesting feature of the directory, however, is a beautiful inset of four pages on enameled paper, entitled "The Right and the Wrong Way," containing a number of halftones illustrating the right and the wrong way to use a telephone. In connection therewith the following suggestions to insure *good service* are given:

Speak in a moderate tone of voice. Enunciate distinctly.

THAT BENEFITS THE OTHER PARTY.

Press the receiver firmly against the ear.

THAT HELPS YOU.

David City, Neb.—A franchise has been granted to the Benedict Telephone Company of Benedict. This is an independent company and will connect with all other independent lines in this and adjoining counties. The new company has quite a large list of subscribers, and they report the outlook decidedly encouraging. This will give David City a competing line, and the new company also promise quite a reduction in rates.

Digitized by Google

PROGRESS OF THE KEYSTONE TELEPHONE COMPANY.

FROM THE PHILADELPHIA RECORD.

Extensions planned by the Keystone Telephone Company will, its officers assert, carry the lines of that corporation as far west as Chicago and as far south as Richmond, with trunk lines to New York and Boston. It is to be developed into a national enterprise, with headquarters in this city. The rapid development of the property is to be accomplished by the purchase of existing independent lines wherever possible and the prompt construction of connecting lines wherever needed to complete a long-distance circuit.

It is thus planned to make the Keystone Telephone Company a direct and powerful competitor of the American Telephone and Telegraph Company, which controls all existing long-distance telephones lines, operating under the name of the Bell Telephone Company. Whenever it happens that an independent line cannot be bought outright a traffic agreement will be effected whereby long-distance service can be guaranteed.

Connections of a commercial character have already been established between the Keystone Telephone Company and several of the largest independent companies operating in Pennsylvania, New Jersey, Delaware, and Maryland, and negotiations are in progress that will ultimately give the Keystone a network of wires extending from Erie and Pittsburg east to Honesdale and Philadelphia, thus covering the entire state and affording three important terminals.

The work of extension within the city is progressing as rapidly as possible. Contracts were closed on Saturday with the Philadelphia Rapid Transit Company, the United Gas Improvement Company, and the Philadelphia Electric Company for special circuits, and it is proposed to establish a special line connecting all banks and trust companies with the clearing house and all private bankers and all stock brokers with the Stock Exchange direct, so that instant service can be relied upon. As most of these institutions have from two to a dozen telephones in more or less constant operation a separate exchange will be established for these special circuits.

THE FARM TELEPHONE AND ELECTRIC LINES.

FROM THE FARMER, INDIANAPOLIS, IND.

It is said that more than 200,000 telephones are now in use by farmers at their homes, and that in the past two years the demand upon manufacturers for telephones and telephone supplies has become very great. It is most likely that this will increase rather than diminish in the next few years. In this way country and city are rapidly coming to a common level of social life, which is happily breaking down all prejudices which have prevailed on the one side and the other. The electric railways now building nearly all over the country are also bringing city and country life in practical contact, and we shall soon see, if, indeed, it is not already so, that the rush to the cities will cease. By these facilities to know constantly what is going on in both country and city, and the opportunity to mix and mingle by the cheap and new transportation lines, it is not likely that the trend will be from the cities to the country, where opportunities for health and home comforts are growing more and more.

PERSONAL.

Mr. C. P. Platt of the sales department of the Kellogg Switchboard and Supply Company of Chicago is confined to his house with typhoid fever. His many friends hope for a rapid recovery.

'PHONE FRANCHISE GRANTED.

Rival Company Organized at Ypsilanti in Spite of Remonstrances.

Ypsilanti, Sept. 17.—The common council granted Shelly B. Hutchinson, the trading stamp millionaire, a franchise for an independent telephone company in spite of a remonstrance from all the business men. A clause in the franchise stipulates that the company must secure 40 subscribers before beginning work in their plant, and those who object are living in hope that it will be impossible to fulfill this condition.

The toll rates to Detroit are less, but otherwise the new company's service will be no cheaper than that offered by the Michigan people.—*Saginaw, Mich., News.*

Digitized by Google

Telephone Magazine

An Illustrated Independent Journal.

MEDINAH BUILDING,

TEL. HAR. 4148. CHICAGO

Published on the 15th day of each month.

C. E. KAMMEYER, Publisher.

SUBSCRIPTION

One year, United States and Canada................$1 00
One year, foreign countries.......................... 1 50
Single copies.. 10

COPYRIGHT

The title and contents of this paper are covered by a general copyright. Permission from publishers must be obtained before any article or table is copied, or any illustration reproduced.

CHICAGO, SEPTEMBER, 1902.

TELEPHONE SERVICE.

Never since the telephone came into general use has such an interesting and important article on the subject of telephone service been written as the one that appears in this issue under the title, "The Telephone: That Potent Factor in Human Affairs."

It is our opinion that if all telephone users would consider the fact that the telephone operator serves more patrons with greater satisfaction, in a much shorter time, and in a more cheerful frame of mind than a servant in almost any other line of business catering to the wants of the public, telephone service in general might be greatly improved. When a subscriber becomes impatient if delayed ten seconds when he thinks he should have been served in five and consequently stops long enough to rail at the operator for slow service, he delays some other subscriber whose business is as important or more so than his. It is obvious that if all the subscribers assigned to one operator's section—usually sixty to one hundred—are as impatient, much time will be lost in a day.

Telephone service is in its infancy, and, no doubt, many improvements will be added in the next decade or two. The directions to telephone users given in Mr. DeLand's article will, we think, prove of value to all who will read them. As the author says, the operator "is playing the low hand in a three-handed game in which she has no control over her two opponents," yet sufficient credit is not always given her. Telephone users can do much to improve the service by making known their wants quickly and politely, thus giving the operator time to fill the wants of others who have equal rights to rapid and accurate service.

INDEPENDENT TELEPHONE ASSOCIATION OF THE UNITED STATES.

For the purpose of consulting upon matters of general importance to the independent telephone movement and to secure closer relations between the different telephone associations, a conference was held September 9 and 10 at the Auditorium Annex in Chicago, called by the Advisory Board of the Independent Telephone Association of the United States.

To this conference had been invited the officers and representatives of the National, Interstate and various State associations, together with the Executive Committees of the National and Interstate associations and representatives of manufacturing companies.

Twelve State associations were represented at the conference in addition to the National and Interstate associations, and there were over fifty persons in attendance.

Without doubt, closer union among the associations will prevail as a result of this meeting, which was harmonious and satisfactory in every way.

The Executive Committee of the Inter-

Digitized by Google

state Association held sessions to arrange for the program and date of the annual meeting of that association which is to be held in December.

The following is a list of the officers and executive members of the various associations who were in attendance:

James M. Thomas, New York, N. Y.
Hugh Dougherty, Bluffton, Ind.
Jos. B. Ware, Detroit, Mich.
H. D. Critchfield, Mt. Vernon, Ohio.
S. E. Wayland, Scranton, Pa.
S. P. Sheerin, Indianapolis, Ind.
H. C. Young, Columbia, Pa.
Henry E. Herr, Ottumwa, Iowa.
R. F. Johnson, Saginaw, Mich.
L. A. Goudy, Portland, Me.
Vinton A. Sears, Boston, Mass.
Thos. E. Parmelee, Plattsmouth, Neb.
C. H. Judson, Minneapolis, Minn.
Mrs. Anney M. Brett, El Paso, Texas.
H. C. Raney, Fairfield, Iowa.
Dr. I. A. Lumpkin, Mattoon, Ill.
E. M. Coleman, Louisville, Ky.
H. K. Cole, Owensboro, Ky.
Chas. E. Hull, Salem, Ill.
Geo. N. Bandy, Perry, Ia
Geo. W. Beers, Ft. Wayne, Ind.
G. A. Kienle, Huntingburgh, Ind.
U. S. Alderman, Nevada, Iowa.
J. S. Bellamy, Knoxville, Iowa.
J. B. Earle, Waco, Texas.

Besides the officers and executive members of the various associations present were the following:

Judge R. S. Taylor, Ft. Wayne, Ind.
Judge W. J. Vesey, Ft. Wayne, Ind.
Judge Payten F. Edwards, El Paso, Texas.
Z. C. Campbell, San Antonio, Texas.
Thomas Bromley, Alma, Mich.
H. A. Price, Saginaw, Mich.
Chas. A. Brown, Chicago.
Alfred Stromberg, Chicago.
A. J. Rousseau, Chicago.
E. B. Overshiner, Chicago.
F. F. Sapp, Cleveland, Ohio.
I. E. Gardner, Bryan, Ohio.
Fred DeLand, Pittsburg, Pa.
J. H. Parish, Madison, Wis.
J. G. Ihmsen, Chicago.
Henry Shafer, Chicago.
Geo. W. Connor, Chicago.
Mr. Densmore, Chicago.
W. O. Meissner, Chicago.
E. E. Yaxley, Chicago.
C. E. Kammeyer.

THE TRIP THROUGH THE TUNNEL.

The morning of Wednesday, September 10th, the second day of the meeting of the National Telephone Committee, was devoted to the acceptance, on the part of the members and visitors, of an invitation extended by President A. G. Wheeler of the Illinois Telephone and Telegraph Company to visit the tunnels which that company is constructing under the business section of Chicago, thus affording an opportunity for inspection of the work.

An invitation extended by Mr. H. A. Harris, of the Automatic Electric Company, to visit the old and new factories of that company was also accepted. At 11 o'clock a large and enthusiastic party had assembled at the Grand Pacific Hotel and was taken in charge by Messrs. A. G. Wheeler, J. B. Russell, and H. A. Harris.

The following gentlemen were of the party: Hon. James M. Thomas, New York; Hon. H. D. Critchfield, Cleveland, Ohio; Hon. J. B. Ware, Detroit, Mich.; Hon. S. P. Sheerin, Indianapolis, Ind.; Fred De Land, Topeka, Kans.; H. A. Price, Bay City, Mich.; F. B. Patten, Chicago; F. F. Sapp, Cleveland, Ohio; L. A. Goudy, Portland, Me.; Rev. Dr. Campbell, Augusta, Ga.; J. B. Earl, Waco, Tex.; Frank Marsh, Chicago; Jno. C. Burmeister, Chicago; H. S. Herr, Cleveland, Ohio; J. F. Crook, Chicago, and C. E. Kammeyer, TELEPHONE MAGAZINE.

Everything being in readiness, the party was conducted to the shaft on Dearborn street opposite the Monadnock block, and by means of the elevator were lowered forty feet to the level of the tunnels. Under the guidance of Messrs. Wheeler, Russell, and Harris, the party made a detour of several miles underneath the city, visiting the tunnels which are completed under Dearborn, Van Buren, Franklin, and sections of other streets. When the party reached the slope leading to the river front, the gentlemen in charge conducted them up the slope, explained the methods of bringing the cars loaded with excavated matter to the surface and carrying the cars loaded with concrete into the tunnels, and also showed them the method of dumping the excavated dirt into the scows, which are used for transporting it to the dumping ground on the lake front.

During the trip every opportunity was

Digitized by Google

given the visitors to carefully inspect the work, all of whom seemed pleased with the beauty and perfection of the work from an engineering standpoint. In order to show the method of construction, the party was taken to a section of the tunnel which had not yet been completed, and in which the wooden supports and iron forms which secured the setting of concrete were still in position. This was an exceedingly interesting feature of the visit, inasmuch as it showed the great amount of work which has been necessary to carve out these enormous tunnels through the subsoil of Chicago and face them up with an everlasting setting of concrete.

After the visit of the tunnels had been completed and the visitors had again seen the light of day, Judge Thomas proposed that a vote of thanks be given Mr. Wheeler and his associates for their invitation and their kindness in conducting them through the tunnels, and this suggestion met with great enthusiasm.

The party was then joined by Mr. J. Harris and first visited the old factory of the Automatic Electric Company, at the corner of Washington and Union streets, where the visitors had the pleasure of seeing an automatic switchboard in operation and making a thorough inspection of the methods of manufacture which have been adopted by this company. An hour spent in this factory was followed by a visit to the new factory of the company, at the corner of Morgan and Van Buren streets. This latter establishment has a floor space of approximately 100,000 square feet, and consists of six stories and a large, light basement. The very latest machinery will be used in the equipment of this plant, and between 800 and 1,000 men will be employed by the company in the manufacture of automatic telephones, switches, and other telephone apparatus.

VALUABLE FEATURES OF THE TELEPHONE DIGEST.

As a means for demonstrating the usefulness of the Digest of all United States patents for telephones from 1789 to January, 1902, compiled by Mr. James T. Allen, examiner in the United States Patent Office, and about to be published by the American Patents Publishing Company, to those who are seeking information on this point, it is announced that the said publication will reproduce everything pertaining to telephones upon which patents were granted during the time mentioned. A feature of particular value is an appendix giving the ***number, name,*** and *date* of *references cited* in the ***examination*** of *applications for patents.* By way of illustration the following is submitted as what will be done along these lines, the following examples being reproduced, however, in the *American Electric and Automobiles Patents Monthly,* which perpetuates the *Telephone Digest.*

On March 4 a patent was granted to Neuman H. Holland for telephone exchange on an application filed February 23, 1901, and the following references were cited against the said application, viz.: Wales 633,403, September 19, 1899; Stromberg 650,810, August 14, 1900; McBerty 509,932, December 5, 1893; another patent granted to Silvester P. Grey on March 11, for coin controlled telephone on application filed August 3, 1901, the reference Cassard 428,828, May 27, 1890, is cited. Another patent granted to Karl Uchermann on March 11, for coin freed telephone apparatus on application filed December 7, 1900, and embracing seven sheets of drawings, the following references were cited: Schneider 421,619, February 18, 1890; Cooke et al 525,094, August 28, 1894; Dull 582,187, May 11, 1897, Valiquet 631,911, on August 29, 1899. Another patent granted to George M. Beerbower on March 11, for telephone receiver support on application filed May 27, 1901, the following references are cited: Hayes 469,474, February 23, 1902; Dugue 612,236, October 11, 1898; Ganoe 664,914, January 1, 1901; London 673,-211, April 30, 1901.

As every patent noticed in the *Telephone Digest* will have a similar list of references as shown in the examples above given, it will be seen that by referring to this appendix the scope and purport of the patent may be more readily obtained than by referring to the patent itself. The list of references shows what precedes the patents noted, and, as such a list is nowhere else available to the public except by securing an expert search, the great value of such an appendix may be appreciated. The readers of THE TELEPHONE MAGAZINE who desire to insure possession of a copy

Digitized by Google

of this publication, and who have not already done so, should communicate with us at once, inasmuch as the *Telephone Digest* will appear on or before January 1, 1903.

BUSINESS ITEM.

The Kellogg Switchboard and Supply Company of Chicago has just closed a contract with the Keystone Telephone Company, Philadelphia, for two more

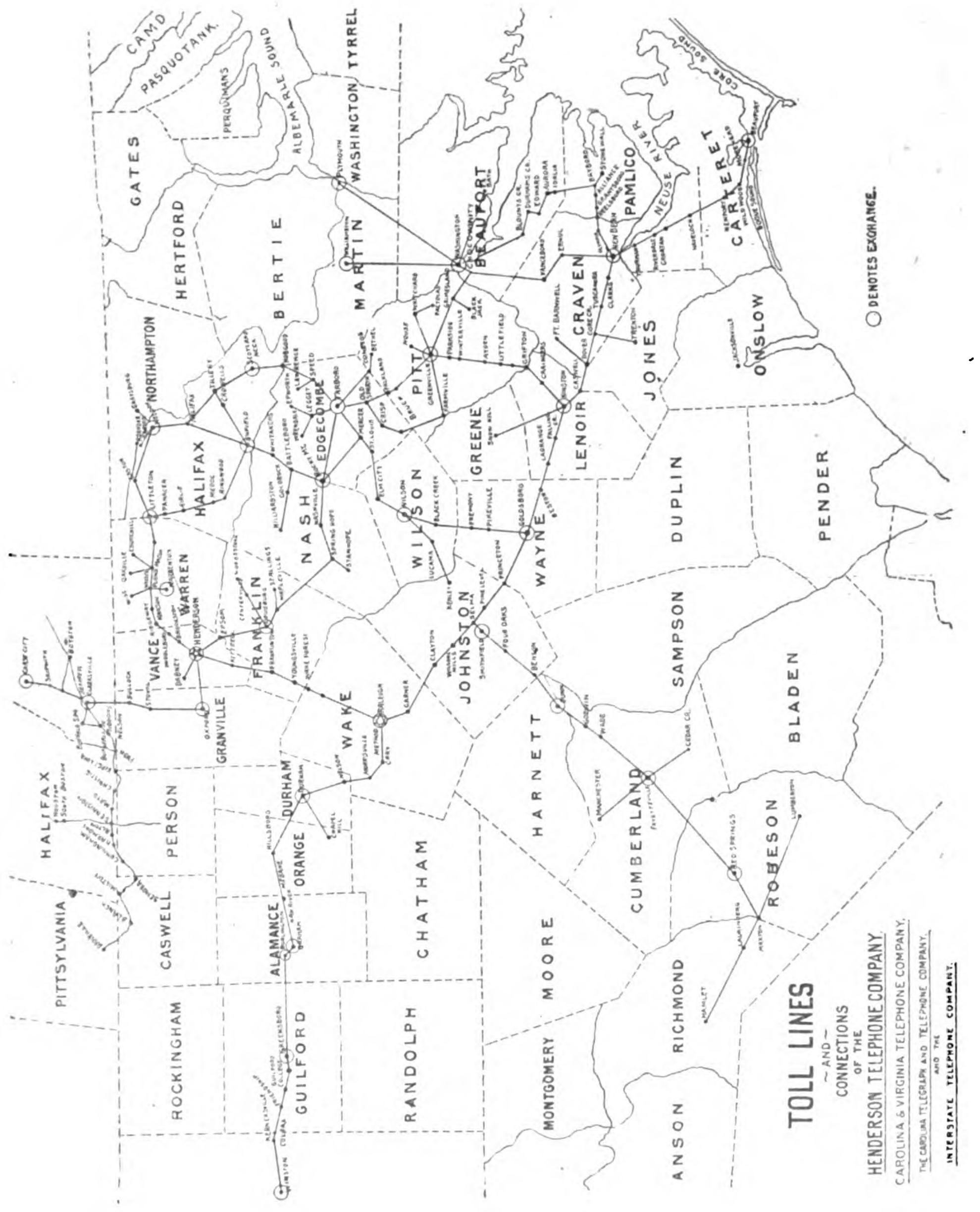

Austin, Tex.—The Grayson County Telephone Company has filed an amendment to its charter, increasing the capital stock from $150,000 to $170,000.

common battery multiple relay switchboards of 4,800 lines capacity each, for their fifth and sixth district exchanges, respectively.

Digitized by Google

Included in this contract is a chief operator's desk, wire chief's desk and manager's desk, all of which will be of mahogany to match the main switchboard, together with all necessary power apparatus, relay racks, distributing frames, lightning arresters, and sneak-current apparatus.

This will make a total ultimate equipment of 34,080 switchboard lines which the Kellogg company will have furnished the Keystone Telephone Company for their extensive system in Philadelphia.

POST CHECK CURRENCY.

FROM THE COURIER, BUFFALO, N. Y.

Although the Post Check Currency bill failed of passage at the last session of Congress, there seems to be no doubt that the measure can succeed in the coming winter if its advocates throughout the country make their desire known to their congressmen. The plan of having United States money so printed that the bills of small denominations can be converted into checks payable to order at any post-office is no doubt familiar to most of the people by this time, as it has been described with frequency and in detail. The convenience which it would afford, the losses which it would save to the multitude who have occasion to send small amounts of money through the mails, doing away with the trouble of securing money orders, unquestionably would be, in the aggregate, vast. The scheme is so practicable, and so entirely simple, that the wonder is that it was not devised and adopted long ago. Almost every newspaper in the country has commented upon it, and we do not recall one that has found reason for opposing it. Congress should at the coming session pass the bill and give the business public the benefit of a really valuable idea.

Citizens should request their representatives in Congress to see that more convenient money is furnished the people.

Ashland, Ky.—Articles of incorporation have been filed at Frankfort, Lewis County, with $2,500 capital. A. J. Stein, formerly of Catlettsburg but now of Vanceburg, and J. W. Chambers of Winchester are stockholders.

INDIANA MUTUAL TELEPHONE ASSOCIATION.

The Indiana Mutual Telephone Association will hold its annual meeting at Indianapolis on October 14, beginning at 10 a. m. There will be a forenoon and an afternoon session. On the night of the 14th the convention will be entertained by the New Telephone Company and the New Long Distance Telephone Company. There is important business, which concerns the management of every telephone company in Indiana, to come before the convention. There will be addresses by the foremost telephone men of the state. The unusual prosperity of Indiana telephone companies should insure a large and interesting meeting. No manager in the state can afford to miss attending. All interested in independent telephony outside of Indiana are most cordially invited.

L. A. FRAZEE, President.
H. B. GATES, Secretary.

CONSIDERING TELEPHONES.

FROM THE DROVERS' JOURNAL, CHICAGO.

The time will come when all progressive farmers will be connected with each other and the outside world by means of the telephone. It is a notable fact that wherever the modern conveniences have been put in there is universal satisfaction, and, so far as the Drovers' Journal has been able to learn, no farmer has ordered his instrument removed.

The need of the phone is already attracting the attention of the farmers in the west. The following clipping is taken from one of our South Dakota exchanges and, written under the head of Valley Springs, shows something of the sentiment that has already invaded the Dakotas. The item reads as follows:

"An energetic movement is being made among the farmers in this part of Minnehaha county to secure farmers' telephone lines. A few days ago Jonathan Dunham of this village was in Sioux Falls, where he interviewed telephone managers and learned much about the methods to be pursued. As a result a meeting has been arranged to be held in the town hall in this place on Tuesday, Sept. 9, to which all farmers and others are invited. Messrs. George and Cook,

Digitized by Google

the telephone managers of Sioux Falls, will be present and will explain what is necessary for the farmers to do. The need of these lines is strongly felt, and it is hoped that a large crowd will turn out."

All that is necessary for the company is to get a few phones located, and the rest are sure to follow in the course of time. We might mention a community with which the writer is perfectly familiar, where, three years ago, the telephone as a practicable thing for the farmer was not thought of. At first a half dozen farmers agreed among themselves that they needed a phone. By forming a series the half dozen farmers were placed on the same line and received all the benefits of the line for the comparatively reasonable sum of $12 per year.

From the small number of five or six instruments the popularity of the telephone has grown to such an extent that the number in use now is something over sixty, and all are in position in the homes of men who own and operate farms. Nothing could bear greater testimony to the success of the telephone than the wonderful growth that has occurred in that locality during a period of less than three years.

FARM TELEPHONES AND BUSINESS.

FROM THE CHICAGO INTER OCEAN.

Last week a farmer living in central Ohio, ten miles from a railway station, used his farm telephone to advantage. He called up the county town, asked the price of cattle, and was informed that evening papers reported a sharp decline in Chicago.

He drove immediately to the nearest railway station, took the train for Chicago, went to the stock yards early next morning, bought eight head of cattle at the lowest rate of the season, and started home with them at 5 o'clock that afternoon. He was away from his farm two nights and one day, and had in pasture stock cattle at a less expenditure of money than would have been called for on any other day of the year.

This illustrates the importance of the farm telephone to the business farm. In this case a dozen farmers of the neighborhood organized their own telephone company, put in their wires, bought their own apparatus, and looked after their own repairs. This independent system could, on call, be placed in communication with the telephone exchange in the county town.

The system is similar to thousands of others, and there are now party lines, independent lines, and toll lines connecting farms with villages or with county towns where seven years ago there was not a single telephone outside of the larger cities. In fact, within the last three years the farm telephone business has called for almost as much activity on the part of manufacturers of telephone apparatus as the city systems. In states like Kansas the general use of telephones has taken away from farm life the feeling of being apart from neighbors and news.

The farmer's wife talks with the farmer's wife or with the grocer and merchant in the nearest village, and supplies butter and eggs on call or when the price suits her best. The farmer who cannot receive a daily paper places himself by means of his telephone in communication with some one who does, and keeps posted as to the markets and the news.

Supplementing the telephone is the rural free delivery. Under the old rule a farmer who was three to six miles from the post office did not write many letters and did not receive many. To mail a letter then meant the hitching up of horses and a drive of five or six miles.

Under the free delivery system the farmer puts his letter in a box at the gate of his door yard and takes from the same box his daily paper or the letters that come to him from friends and business men.

To mail or receive a letter causes no interruption of work in harvest time or any other time, and the fact that he is in daily communication with cities and markets makes the farmer more alert as to what is going on in the business world.

In addition to the telephone and free delivery there is the trolley. A few years ago members of farmers' families in Illinois and in other western states went to town only when the horses could be spared from the regular farm work. Therefore, there were weeks when not a member of the family could go to the nearest town,

Digitized by Google

and naturally there was much discontent among the girls and boys.

The invasion of the trolley has revolutionized farm life in this particular. In Illinois, Indiana, and Ohio the trolley lines penetrate for miles and miles in the farming districts, extending out from cities like Chicago and Toledo to smaller towns and to the remoter country districts.

The result is that a farmer or his wife or his children can run into the nearest town or to the county town at will without taking the horses in plowing time or hauling time without inconvenience to any one. The trolley carries not only the farmer, but his basket of eggs or box of butter or his bushel or two bushels of early potatoes. He can call up by telephone the merchant in the county town and practically sell his produce before he leaves the farm and deliver it by trolley.

Through the farm telephone, the rural free delivery, and the trolley the farmer is no longer isolated. The conditions of farm life, with the traveling library coming at call and the daily newspaper coming by mail and with the trolley opening the way to town, are not such as send the young scurrying toward the city. Therefore, it is not strange that the prices of farm land have greatly increased since the introduction of the farm telephone and the establishment of the rural free delivery.

PERSONAL.

The Haines & Noyes Co., manufacturers of telephone apparatus, Chicago, U. S. A., announce that they have recently opened an eastern office, under the management of Mr. J. A. Mears and Mr. F. H. Schlesinger, at 220 Broadway, New York.

This office will take care of the entire eastern business and all prices in this territory will be f. o. b. New York. A full line of stock and samples will be carried, and inasmuch as both Mr. Schlesinger and Mr. Mears are practical electrical men, as well as telephone men, the Haines & Noyes Co. state that they feel sure that all prospective purchasers as well as former customers will be well taken care of.

Mr. Schlesinger was formerly associated with Stanley & Patterson, as well as with the Peru Electric Mfg. Co. Mr. Mears is a well-known business man of New York City.

The Haines & Noyes Co. wish to state that all correspondence coming from the east should be directed to their New York office.

* * *

The People's Mutual Telephone Company of Latimer will soon be ready for business. The company was recently organized, mainly for the purpose of giving the farmers the benefit of telephone connections in the west part of the county, but before the deal is completed it is hoped that arrangements will be made so that the new line will connect with the old Hawkeye company in this city, and should this be the case the farmers as well as the town people will have a telephone service that will be unequaled anywhere. The company guarantees a good investment to stockholders besides the use of the phones, and those who wish stock should see the officials as soon as possible. The men connected with the new company is evidence enough that the business of the organization will be well handled. The officers are as follows: President, D. W. Parks, Hampton; secretary, F. D. Smith, Latimer; treasurer, C. M. Quimby, Latimer; other directors, C. M. Goodyear of Hampton, and C. Ottosen of Ottosen.—*Hampton, Iowa, Chronicle.*

* * *

The Hyde County Telephone Company at Highmore, S. D., has been incorporated with a capital of $1,000; incorporators, A. N. VanCamp, A. N. Gerhard, S. Drew.

* * *

Cropsey, Ill.—The Cropsey Telephone Company has been incorporated with a capital stock of $2,500, the object being to conduct a general telephone business. The incorporators are E. C. Hayward, R. T. Slater, S. R. Williams, H. L. Barnes, and E. W. Crum.

* * *

St. Paul, Minn.—The Minnesota Valley Telephone and Telegraph Company, with headquarters at Mankato, has filed articles of incorporation. The capital stock is $100,000, and J. H. James and nineteen other citizens of Mankato; J. B. Meagher of St. Paul, and E. H. Moulton of Minneapolis are the incorporators.

Digitized by Google

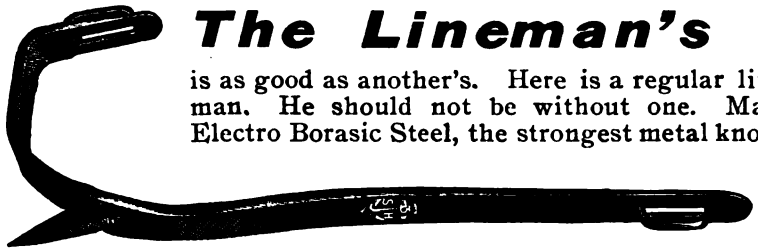

The Lineman's Money

is as good as another's. Here is a regular life saver for a lineman. He should not be without one. Made from Swedish Electro Borasic Steel, the strongest metal known. Forged from one piece. Improved spur. No rivets to loosen, thereby endangering life. Illustrated in the New Green Book of Hardware Specialties.

THE SMITH & HEMINGWAY CORP.
Manufacturers of Cutlery and Hardware Specialties. Ask your dealer for these goods.

UTICA DROP FORGE & TOOL CO.
Manufacturers of Nippers and Plyers,
296 Broadway, - - NEW YORK CITY

AN ERICSSON ?

YES, AND IT IS "STANDARD OF THE WORLD"

Switchboards of all sizes; telephones for all uses and full exchange equipment. We help new companies to start right and old exchanges to improve.
We can interest you. Write for particulars.

ERICSSON TELEPHONE CO., 296 Broadway, NEW YORK CITY.

RELAY SHELLS

We are supplying them in large quantities for progressive manufacturers. Companies installing central systems, covering thousands of subscribers, use them. They are drawn from stock make in our own Steel Mill.

We also make

MAGNET CORES

of a superior quality of Norway Iron thoroughly annealed.

Inquiries solicited.

Samples of work to responsible concerns.

FEDERAL MFG. CO.
THOMPSON FACTORY,
CHICAGO, ILL.

MENOMINEE

Electric.....

Manufacturing Company
MENOMINEE, MICH.
Manufacturer of

High Grade Magneto Bells for Series and Bridged Work.

A careful study of the requirements of the independent telephone field, together with long experience in the manufacture of electrical apparatus, enables us to offer a very superior instrument containing all the qualities that combine to effect the highest degree of efficiency at prices commensurate with the extraordinary quality of our produce

OUR MOTTO IS
The Best Equipment.
To the Best People.
At the Best Price.
Gives the Best Results.

FAN MOTORS - - FAN MOTORS
Unequaled for Telephone Booths, Offices, Factories and Residences.

Digitized by Google

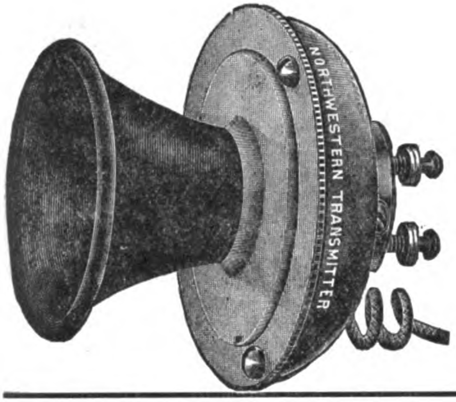

NORTHWESTERN TELEPHONE MANUFACTURING CO.

We make Telephones for the Wholesale and Supply Trade

ANY STYLE, AND PARTS FOR ALL TELEPHONES.
WORKMANSHIP GUARANTEED.
SEND FOR PRICES.

Address 191 to 193 S. Canal St., CHICAGO.

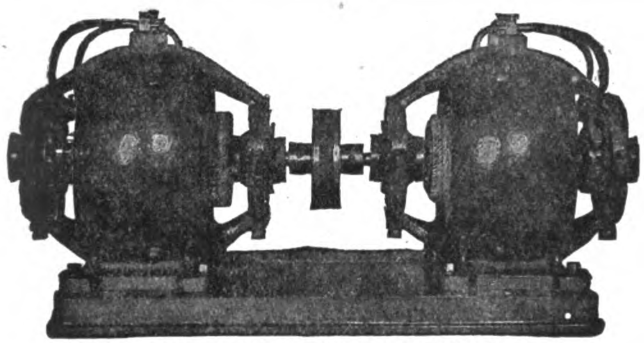

TWIN CHARGING MOTOR-GENERATORS

TELEPHONE POWER APPARATUS OF EVERY DESCRIPTION

Our Line will fill all your wants

Charging Outfits
Ringing Generators
Special Telephone Power Apparatus
Send for Bulletin No. 147

ROTH BROS. & CO.

88-92 W. Jackson St., CHICAGO, ILL.

The American Electric and Automobile Patents Monthly

INCLUDING ALL PATENTS FOR TELEPHONES

The publication to contain each and every sheet and figure of the drawings of the telephone patents, the claims in full, a short description of the invention, also a complete list of the references cited while the applications were pending, *interferences, parties thereto and the decisions, also reissues, designs and trademarks pertaining thereto.* . . . .

SUBSCRIPTION PRICES

Including the *Telephone Magazine* Published Monthly

United States and Canada . . $5.00 per annum, in advance
Foreign Countries . . . . . 7.50 per annum, in advance

ADDRESS

Telephone Magazine Medinah Temple Chicago, U. S. A.

Digitized by Google

PAY Stations that PAY

This is the Station Adopted by the

KEYSTONE TELEPHONE CO., Philadelphia, Pa.

Our Stations are used by the Exchanges in

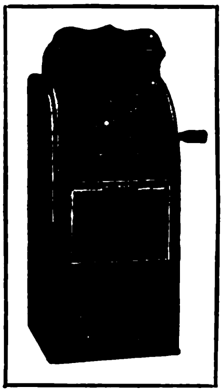

Baltimore.
Pittsburg, Pa.
Indianapolis, Ind.
Syracuse, N. Y.
Columbus, O.
Saginaw, Mich.
Denver, Colo. (Bell)
Memphis, Tenn. (Bell)
Philadelphia, Pa.
Cleveland, O.
Rochester, N. Y.
Grand Rapids, Mich.
Savannah, Ga.
Salt Lake, Utah (Bell)
Kansas City, Mo. (Bell)
New Orleans, La. (Bell)

Every Large Independent Exchange in this Country now using Pay Stations use our make. This is significant. They get the BEST.

The AMERICAN TOLL TELEPHONE CO.

40 to 50 Sheriff St., CLEVELAND, O.

Bound Volumes

Vol. XVII. January-June 1901
Vol. XVIII. July-December 1901

OF THE

Telephone Magazine

NOW READY

Substantially bound in Muslin with Gilt Title, will be sent, postpaid, for $1.50 to any address.

Telephone Magazine

Medinah Temple, Chicago, U. S. A.

A LIBRARY OF TELEPHONE LITERATURE

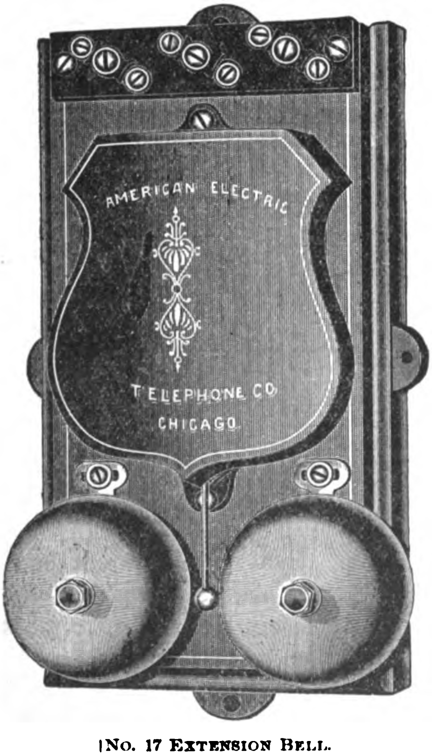

No. 17 Extension Bell.

. . . The

No. 17 Extension Bell

With Condenser

FOR DESK SETS AND WALL TELEPHONES

ADAPTED FOR CENTRAL ENERGY COMMON BATTERY OR MAGNETIC SYSTEMS

American Electric Telephone Co.

36-58 West Jackson Blvd.
CHICAGO, U. S. A.

Digitized by Google

THE
Plume & Atwood Mfg. Co.
199 Lake St., CHICAGO, U. S. A.

BRASS, COPPER
AND
GERMAN SILVER
IN
Sheet, Rods, Wire, Brazed and Seamless Tube

TELEPHONE AND KINDRED BOOKS.

THE INSPECTOR AND TROUBLE MAN. By A. E. Dobbs.
A complete volume on telephone faults and exchange construction. 110 pages, 67 illustrations $1.00

TELEPHONES; THEIR CONSTRUCTIONS AND FITTING. By F. C. Allsop.
A practical treatise on the fitting up and maintenance of telephones and the auxiliary apparatus. 208 illustrations and folding plates. Third edition, 12mo, cloth 1.25

PRACTICAL FEATURES OF TELEPHONE WORK. By A. E. Dobbs.
This volume is on telephone construction, and should be of great value to every telephone man. 135 pages, 65 illustrations .... .75

SMALL ACCUMULATORS. By Percival Marshall.
As storage batteries are being used in the telephone exchanges, all telephone men should be familiar with their construction and working. This volume will be found to be complete to every telephone student. 80 pages, 23 illustrations .... .50

THE GALVANOMETER AND ITS USES. By C. H. Haskins.
A manual for electricians and students. Fourth edition, revised. 12mo, morocco; illustrated 1.50

INDUCTION COILS. By G. E. Bonney.
A practical manual for amateur coilmakers. 101 illustrations, 12mo, cloth 1.00

ELECTRIC TELEPHONY. By E. J. Houston and A. E. Kennelly.
Elementary Electro-Technical Series. 16mo, cloth; illustrated 1.00

ELECTRIC INSTRUMENT MAKING FOR AMATEURS. By S. R. Bottone.
A practical handbook, with 48 illustrations. Fourth edition. Enlarged by a chapter on The Telephone. 12mo, cloth .... .50

TELEPHONE INSPECTOR'S HANDBOOK. By W. H. Hyde and J. H. McManman.
Telephone Troubles and How to Find Them. 64 pages. Many illustrations. The only book enabling telephone men to instantly overcome telephone troubles .... .25

THE TELEPHONE. By William J. Hopkins.
Outline of the development of Transmitters and Receivers. 12mo, cloth, New York: 1898, 1.00

THE MAGNETO HAND TELEPHONE. By Norman Hughes.
Its Construction, Fitting Up and Adaptability to Everyday Use. 12mo, cloth 1.00

TELEPHONE HAND BOOK. By Herbert Law Webb.
12mo, cloth. 133 illustrations. Chicago: 1900 .... 1.00

PRACTICAL ELECTRICS.
This volume could rightly be called an electric encyclopedia. It contains information on everything pertaining to electrical matters. 135 pages, 126 illustrations .... .75

SYSTEMATIC TREATISE ON ELECTRICAL MEASUREMENTS. By H. C. Parker.
Treats more particularly of methods used in laboratory, telegraph and cable testing. 120 pages, 100 illustrations, cloth 1.00

PRACTICAL TELEPHONY. By J. Bell and S. Wilson.
Adapted to Requirements of City and Guilds of London Institute. 8vo, limp cloth. London: 1898 .... 1.00

ELECTRICAL CATECHISM. By Geo. D. Shepardson, M. E.
An introductory treatise on electricity and its uses. 400 large octavo pages. 1516 illustrations. New York: 1901 .... 2.00

AMERICAN TELEPHONE PRACTICE. By Kempster B. Miller.
518 large octavo pages. 379 illustrations. This book treats of the subject in a simple and comprehensive manner from the practical standpoint, and almost entirely without the use of mathematics. All matters of principle and practice are clearly and fully considered, enabling the reader to obtain an understanding, not only of the rudiments of telephony, but also of the most intricate circuits of modern exchanges 3.00

WILL SEND ANY ELECTRICAL BOOK PUBLISHED ON RECEIPT OF PRICE, POST PREPAID.

ADDRESS

Telephone Magazine - MEDINAH TEMPLE, CHICAGO, U. S. A.

Digitized by Google

Four Party Line

SELECTIVE SIGNAL TELEPHONES

......FOR......

Central Energy Systems

ANTICIPATING THE PRESENT GREAT DEMAND FOR TWO AND FOUR PARTY SELECTIVE SIGNALING TELEPHONES FOR USE IN CONNECTION WITH COMMON BATTERY OR CENTRAL ENERGY SWITCHBOARDS, THE AMERICAN ELECTRIC TELEPHONE COMPANY SECURED CONTROL OF VALUABLE PATENTS PERTAINING TO SELECTIVE SIGNALING APPARATUS.

PRIOR TO THE AMERICAN COMPANY SECURING THEIR PATENTS, SELECTIVE SIGNALING SERVICE FOR CENTRAL ENERGY WORK WAS, AT ITS BEST, A VERY UNSATISFACTORY PROPOSITION. IN THE WELL-KNOWN SYSTEMS OF SELECTIVE SIGNALING APPARATUS, THE USUAL PRACTICE IS TO USE TELEPHONES IN WHICH THE SIGNAL BELL IS SELECTIVELY POLARIZED—THAT IS TO SAY, THE SIGNAL BELL IS SO ARRANGED THAT IT WILL RESPOND ONLY TO CURRENTS PASSING THROUGH IT IN A CERTAIN DIRECTION, EITHER PLUS OR MINUS, DEPENDING UPON WHETHER THE BELL IS ARRANGED TO OPERATE WHEN A CURRENT IN A MINUS OR PLUS DIRECTION IS SENT THROUGH IT.

HAVING EXPERIENCED ALL OF THE ABOVE DIFFICULTIES AND PRACTICALLY ABANDONED FOUR-PARTY LINE SELECTIVE WORK, THE AMERICAN ELECTRIC TELEPHONE COMPANY OBTAINED CONTROL OF THE LEICH SELECTIVE SIGNALING PATENTS. THIS SYSTEM OVERCAME EVERY ONE OF THE OBJECTIONS PREVIOUSLY PRESENT IN THE SELECTIVELY POLARIZED SYSTEM.

SEE OUR NEW SELECTIVE PARTY LINE SYSTEM

FOR FARMERS' LINES—A LARGER NUMBER CAN BE USED ON ONE LINE AND HAVE PRIVATE COMMUNICATION AND SELECTIVE RINGER.

SOMETHING NEW. FOR PARTY LINES.

ANY NUMBER OF TELEPHONES CAN BE USED ON A METALLIC LINE. — PERFECTLY SELECTIVE RINGING AND TALKING.

SEND FOR CIRCULAR AND PRICES.

American Electric Telephone Co.

36 to 58 West Jackson Boulevard, Chicago, U. S. A.

Please mention TELEPHONE MAGAZINE in writing to advertisers.

Digitized by Google

VISUAL TELEPHONE SWITCHBOARD LAMPS

WE ARE THE LARGEST MANUFACTURERS OF VISUAL TELEPHONE LAMPS WITH A STANDARD OF EXCELLENCE APPROACHED BY NONE

TELEPHONE SWITCH-BOARD LAMPS.

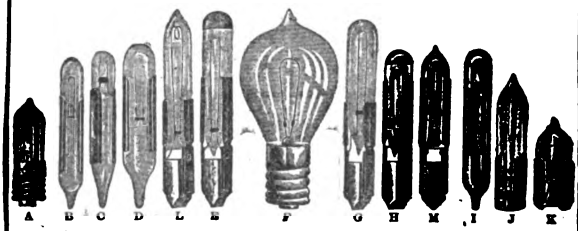

A B C D L E F G H M I J K

The success of our Telephone Switch-board Lamps, in this country and abroad, is due to the ingenuity of our, Mr. H J. [illegible], and is the result of years of application and research; working upon entirely original principles, he has succeeded in producing the most uniform lamps, pronounced by experts the superior of all others. The metallic chemical process that we apply to these Filaments, is of the greatest value in producing LONG LIFE, HIGH EFFICIENCY, and maintenance of candle power.

On account of the various sizes and voltages of these lamps, we make them to order according to specifications. Prices quoted on application. Samples exchanged for comparison.

POINTS OF SUPERIORITY; LONG LIFE, HIGH EFFICIENCY, MAINTENANCE OF CANDLE POWER AND CARE IN MANUFACTURE

SAMPLE PAGE OF OUR MINIATURE CATALOGUE

Mail us a Sample of Lamp you use, will send one of ours for comparison.

AMERICAN MINIATURE AND DECORATIVE LAMP CO.

436-438 BROOME STREET, NEW YORK

132-134 LAKE STREET, CHICAGO, ILL.

LONDON. PARIS. BERLIN. MONTREAL, CAN. SYDNEY, N. S. W.

Gordon Cells

Extensively Used by

Leading Telephone Companies and Manufacturers

Guaranteed Long Life and Efficiency

Ask for Catalog and Discounts

Gordon Battery Co.

439-445 E. 144th Street NEW YORK

SWITCHBOARD CORDS
SILK CORDS

Any Style — For Any Purpose

PROMPT DELIVERIES

The McDermid Mfg. Co.

120 W. Jackson Boulevard, CHICAGO, U. S. A.

BINDERS

For preserving your Copies of

Telephone Magazine

Will be sent postpaid for

50 cents in stamps.

STRONG, SIMPLE, DURABLE.

Will hold six months' or a year's numbers.

SEND FOR ONE.

Telephone Magazine

Medinah Temple, Chicago, U. S. A.

Digitized by Google

SPECIFY THE "Chloride Accumulator" FOR TELEPHONE WORK.

THE ELECTRIC STORAGE BATTERY CO.

PHILADELPHIA

PHILADELPHIA Allegheny Ave. & 19th St. NEW YORK 100 Broadway BOSTON 60 State St. CHICAGO Marquette Bldg BALTIMORE Continental Trust Bldg.
ST. LOUIS Wainright Bldg CLEVELAND New England Bldg. SAN FRANCISCO Nevada Block DETROIT Michigan Elect Co HAVANA, CUBA G F. Greenwood, 34 Empedrado St.

SPEER CARBON COMPANY

Manufacturer of

CARBON BACKS AND SPECIALTIES FOR TELEPHONES—ALSO LIGHTNING ARRESTER CARBONS OF EVERY DESCRIPTION .....

ST. MARYS, PA.

FOR SALE.

We have one latest type Stromberg-Carlson, Magneto Switchboards, 100-Drop Cabinet with 50 Series and 20 Toll Line Drops installed which we wish to sell to make room for a larger board. Cost about $300 with attachments. Will sell at a bargain.

Clinton Home Telephone Company.

M. S. POWELL, Manager.

Why you should Advertise in the

AMERICAN TELEPHONE JOURNAL

BECAUSE

1. It is not a house organ.
2. No one connected with manufacturing, jobbing, selling or operating has a dollar's interest in it. It therefore does not "play favorites" and is fair to all.
3. It publishes more telephone literature and news than all of the telephone and electrical papers of the world combined.
4. It spares no expense to procure latest and best matter that is of interest to the operator, whether he be a farmer or the chief officer or engineer of a million dollar company.
5. Its paid subscription is greater than the combined paid subscriptions of all telephone papers and telephone subscriptions of all electrical papers.

The AMERICAN TELEPHONE JOURNAL

CHICAGO: 513 Monadnock Block. NEW YORK: 116 Nassau Street.

A POPULAR SCIENTIFIC WEEKLY JOURNAL

ELECTRICITY AND ELECTRICAL ENGINEERING

The Most Successful Medium for Advertising in the United Kingdom

WRITE FOR SAMPLE COPY AND ADVERTISING RATES

2 EXETER ST. STRAND LONDON, ENGLAND

ELECTRICAL ENGINEERING PUBLISHING CO., Marquette Building, Chicago, Ill.

Please mention TELEPHONE MAGAZINE in writing to advertisers.

Digitized by Google

INDEX TO ADVERTISEMENTS.

	PAGE
American Electric and Automobile Patents—Publication	XII
American Electric Telephone Co.—Telephone Apparatus	IV
American Telephone Journal	XVI
American Electric Telephone Co.—Transmitters	XX
American Electric Telephone Co.—Telephones	VIII-XV
American Electric Telephone Co.—Selective Signal Telephones	XV
American Miniature and Decorative Lamp Co.—Switchboard Lamps	XVI
American Toll Telephone Co.—Pay Stations	XIII
Bell Telephone Mfg. Co.	XII
Bulkley, Chas. C.—Patent Lawyer	X
Chicago Edison Co.—Electric Lighting Supplies	III
Central Manufacturing Co.—Announcement	X
Coit, Henry A.	X
Conley Foil Company—Tin Foil	X
Cook, Frank B.—Protective Apparatus	IX
Clement, Edward E.—Announcement	
Electric Review	XVI
Electric Storage Battery Co.—Accumulators	XVII
Electricity (London)—Newspaper	XVII
Ericsson Telephone Co.—Microphones	XI
Federal Manufacturing Co.—Relay Shells	XI
For Sale	
Gordon Battery Co.—Batteries	XVI
International Correspondence Scoools	XVI
Keystone Electric Telephone Mfg. Co.—Telephones	VI
King, P. S. & Son	XVIII
Klein, Mathias & Son	X
Menominee Electric Mfg. Co.—Magnets	XI
McDermid Mfg. Co.—Magnet Wire	XVI
National Carbon Co.—Batteries	V
New York Insulated Wire Co.—Rubber-covered Wires and Cables	X
Northwestern Tel. Mfg. Co.—Telephones	XII
Nungesser Electric Battery Co.—Batteries	VI
Okonite Co., Ltd.	X
Pacific Electric Co.—Telephone Intensifiers	XVII
Plume & Atwood Mfg. Co.—Brass, Copper and German Silver	XIV
Roth Bros. & Co.—Power Apparatus	XII
Royal Trust Company	X
Situations Wanted	
The Smith & Hemenway Corp.	XI
Special Offer	
Standard Underground Cable Co.	X
Speer Carbon Co.—Carbon Specialties	XVII
Swedish-American Telephone Co.—Telephones	V
Telephone Magazine—Binders	XVI
Telephone Magazine—Bound Volumes	XIII
Telephone Magazine—Books	XIV
Telephone Magazine	VII
Utica Drop Forge & Tool Co.	IX
Victor Telephone Works—Desk Stands	V
Weston Elec. Instrument Co.—Testing Instruments	III

NEW PUBLICATIONS FOR ENGINEERS

THE PRACTICAL PHYSICS OF THE MODERN STEAM BOILER.

By FREDERICK JOHN ROWAN, A. M. I. C. E., M. I. E. S., late Vice-Pres. Fed. Inst. M. E., late Mem. Coun. Soc. Chem. Ind. In this work the physical principles which demand consideration in the construction and working of Steam Boilers are passed in review, and the result is to give a new standpoint from which many of the questions connected with steam generation can be considered. This work deals with the Boiler from the point of view of a Heat-Engine, and, as the title indicates, is occupied with the Physics of the Steam Boiler. It will thus be seen that it proceeds on the lines on which alone improvement in steam generation can be hoped for. Price £1 1s, net. Demy 8vo. Over 400 pp., with numerous illustrations.

HIGH-SPEED STEAM ENGINES.

A Guide to English and Foreign Practice. By W. NORRIS, M. I. Mech. E., &c,, and BEN H. MORGAN. With reproductions of over 156 photographs and drawings, and numerous tests. Second Edition. Demy 8vo, cloth. 10s 6d, net.

"We can cordially recommend this book to any one who wants to know all about high-speed engines."—*Electricity*

PUMPS: THEIR CONSTRUCTION AND MANAGEMENT.

Graphically illustrating the different classes of Pumps, pointing out the advantages and disadvantages of each class, and giving hints as to management. By PHILIP R. BJORLING. Cloth. 3s 6d, net.

"Mr. Philip R. Bjorling is one of the greatest authorities on Pumps."

MODERN METHODS OF SAVING LABOR IN GASWORKS.

A profusely illustrated work, showing the latest and best means employed for economically manipulating and managing Gasworks' material. By C. E. BRACKENBURY. A. M. Inst., C. E. Cloth. 3s 6d, net.

"A most valuable monograph on the subject."—*Scientific American*,

GLASGOW INTERNATIONAL EXHIBITION, 1901—AN ENGINEERING RECORD.

The only complete technical work dealing with the engineering sections. Graphically illustrated with photographs and drawings, and contains several colored plates Cloth. 5s, net,

"I congratulate you on the careful manner in which you have compiled so elaborate and exhaustive a book and one so extremely interesting."—*Mr. Thomas Young, the Engineer to the Exhibition.*

TRANSPORT BY AERIAL ROPEWAYS.

A complete treatise on the leading systems of ropeways. Fully illustrated and described by the designs of each system. Second edition. Paper. Price, 1s; post free, 1s 4d, net.

"An elaborate production describing all the important aerial systems."—*Mining World.*

London: P. S. KING & SON, 2 and 4 Great Smith Street, Westminster

Digitized by Google

PHILADELPHIA STYLE
DESK SET

Digitized by Google

American Central Energy **Transmitter**

FAR SUPERIOR TO THE BELL

LONG DISTANCE SOLID BACK

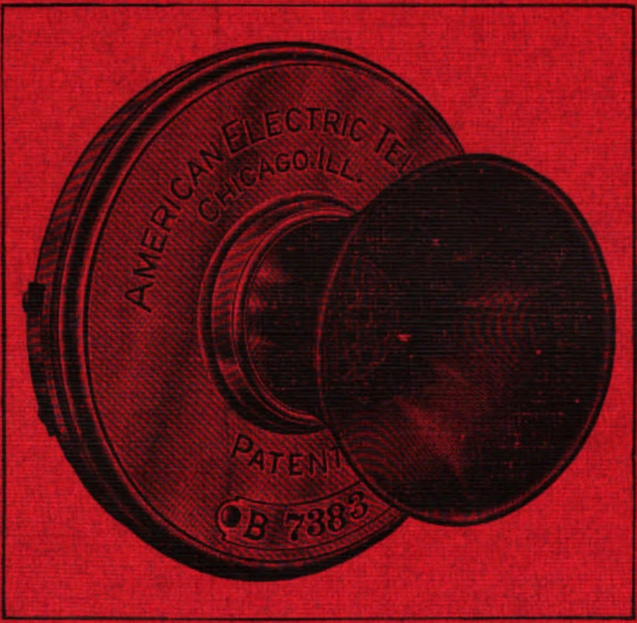

AMERICAN CENTRAL ENERGY TRANSMITTER

WHEREVER INTRODUCED THIS TRANSMITTER HAS BEEN PRONOUNCED THE MOST EFFICIENT AND POWERFUL TRANSMITTER EVER MADE. THIS BEING THE OPINION OF ENGINEERS WHOSE JUDGMENT IS BASED UPON EXHAUSTIVE TESTS.

American Electric Telephone Co.

36 to 58 West Jackson Boulevard, Chicago, U. S. A.

Digitized by Google

THE PIONEER INDEPENDENT TELEPHONE PAPER.

Telephone Magazine

VOL. XX. CHICAGO, OCTOBER, 1902. NO. 133.

CONTENTS

How and Why The Original Increase in Telephone Rates Came About. By Fred De Land 137
Defeat of Bell Telephone Co. 141
Costs More to Talk 142
The Telephone War Opens 143
Monthly Digest of Telephone and Kindred Patents. (Illustrated). By Arthur F. Durand 144
Chicago Telephone Company Would Lose Heavily 168
New 'Phone Company in Northeastern Michigan 168
Keystone Telephone Company to Invade New York 169
Trade Notes 171
Call Again. (a Poem.) Bert L. Taylor 171
It Writes The Messages 171
Telephone Progress in Canada 172
Telephone Extension in Iowa 172
Telephone Franchise Fight 173
Getting Value For the Franchise 173
New Telephone Company for Michigan 173
Telephone Campanies' Rights 174
Ruling Marks Law's Progress 174
Will Oust Central Union 175
Fine Showing of Local Telephone Company 175
Bell 'Phones Ordered Out 175
New Telephone Company 175
Commercial Intelligence 176
Independent Items 176

PRICE, 10 CENTS.

Entered at the Chicago Post Office as Matter of the Second Class.

Digitized by Google

"I have taken the Telephone Magazine one year, and I think it the best thing on earth for a telephone man to read. Please don't make any mistake in my address."
William G. Porter.

Digitized by Google

Weston Electrical Instrument Co.

Waverly Park, NEWARK, N. J., U. S. A.

PORTABLE DIRECT READING

Voltmeters and Wattmeters

For Alternating and Direct Current Circuits.

The only standard portable instrument which deserves this name. Absolutely permanent, if not abused.

Portable Direct Reading

Voltmeters, Milli-Voltmeters. Ammeters, Milli-Ammeters.

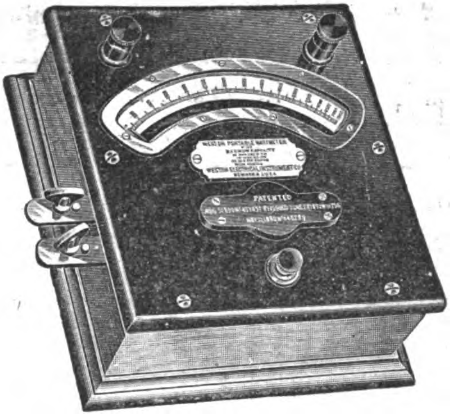

PORTABLE DIRECT READING WATTMETER FOR ALTERNATING AND DIRECT CURRENTS.

A NEW CATALOGUE ON

Voltmeters, Potential Indicators, Ammeters

FOR

Central Stations AND Isolated Plants.

Highest Accurancy Least-Consumption of Energy.

SEMI-PORTABLE LABORATORY STANDARD VOLTMETERS AND AMMETERS.

The most accurate and most convenient absolute standard ever offered.

Correspondence Solicited.

BERLIN—European Western Electrical Instrument Co., Ritterstrasse No. 88.

LONDON—Elliott Bros., No. 101 St. Martins Lane.

CHICAGO EDISON CO.

DEALERS IN

ELECTRIC LIGHTING SUPPLIES

139 ADAMS STREET

CHICAGO

Digitized by Google

Four Party Line

SELECTIVE SIGNAL TELEPHONES

......FOR.....

Central Energy Systems

ANTICIPATING THE PRESENT GREAT DEMAND FOR TWO AND FOUR PARTY SELECTIVE SIGNALING TELEPHONES FOR USE IN CONNECTION WITH COMMON BATTERY OR CENTRAL ENERGY SWITCHBOARDS, THE AMERICAN ELECTRIC TELEPHONE COMPANY SECURED CONTROL OF VALUABLE PATENTS PERTAINING TO SELECTIVE SIGNALING APPARATUS.

PRIOR TO THE AMERICAN COMPANY SECURING THEIR PATENTS, SELECTIVE SIGNALING SERVICE FOR CENTRAL ENERGY WORK WAS, AT ITS BEST, A VERY UNSATISFACTORY PROPOSITION. IN THE WELL-KNOWN SYSTEMS OF SELECTIVE SIGNALING APPARATUS, THE USUAL PRACTICE IS TO USE TELEPHONES IN WHICH THE SIGNAL BELL IS SELECTIVELY POLARIZED—THAT IS TO SAY, THE SIGNAL BELL IS SO ARRANGED THAT IT WILL RESPOND ONLY TO CURRENTS PASSING THROUGH IT IN A CERTAIN DIRECTION, EITHER PLUS OR MINUS, DEPENDING UPON WHETHER THE BELL IS ARRANGED TO OPERATE WHEN A CURRENT IN A MINUS OR PLUS DIRECTION IS SENT THROUGH IT.

HAVING EXPERIENCED ALL OF THE ABOVE DIFFICULTIES AND PRACTICALLY ABANDONED FOUR-PARTY LINE SELECTIVE WORK, THE AMERICAN ELECTRIC TELEPHONE COMPANY OBTAINED CONTROL OF THE LEICH SELECTIVE SIGNALING PATENTS. THIS SYSTEM OVERCAME EVERY ONE OF THE OBJECTIONS PREVIOUSLY PRESENT IN THE SELECTIVELY POLARIZED SYSTEM.

SEE OUR NEW SELECTIVE PARTY LINE SYSTEM

FOR FARMERS' LINES—A LARGER NUMBER CAN BE USED ON ONE LINE AND HAVE PRIVATE COMMUNICATION AND SELECTIVE RINGER.

SOMETHING NEW. FOR PARTY LINES.

ANY NUMBER OF TELEPHONES CAN BE USED ON A METALLIC LINE. — PERFECTLY SELECTIVE RINGING AND TALKING.

SEND FOR CIRCULAR AND PRICES.

American Electric Telephone Co.

36 to 58 West Jackson Boulevard, Chicago, U. S. A.

Please mention TELEPHONE MAGAZINE in writing to advertisers

Digitized by Google

$4.50 VICTOR DESK STAND

WITH

Transmitter and Receiver

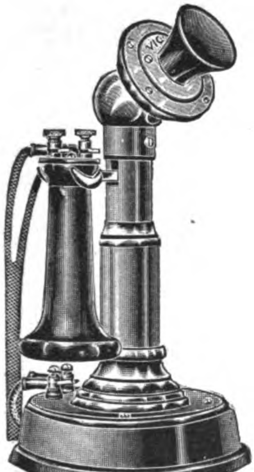

WHILE THEY LAST

VICTOR DESK STAND COMPLETE WITH GENERATOR BELL AND BATTERIES - - - - $9.00

VICTOR TELEPHONE WORKS

203-207 So. Canal St., Chicago, Ill, U. S. A.

The Columbia will do more work, last longer, and give better satisfaction than ANY other dry cell.

The same is true of the National No. 2 Cell, compared with other wet cells.

With our cells you can better your service, and cheapen cost of maintenance. Write for prices and particulars.

LOCK DRAWER "L"
CLEVELAND, OHIO

National Carbon Co.

Digitized by Google

Nungesser Primary Batteries.

Our improved No. 4, 300 ampere-hour Closed Circuit Battery is the most powerful battery of this class. It is put up in both glass and porcelain jars. This battery is very largely used for telephone exchange service, central energy systems, gas and gasoline engine ignition, railway signals, etc.

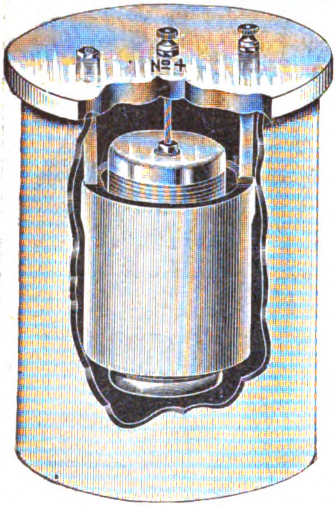

No. 4—SIZE 5½ in. dia. x 7½ in. high.

THE 1900 DRY BATTERY

Is manufactured Expressly for Telephone Exchange Service. In every comparative test made within the past four years, the 1900 Dry Battery has proven its superiority over all other dry or wet batteries. This battery has shown, in many of the most progressive telephone exchanges in this country, over there years' continuous service. without attention of any kind. They are now more largely used than all other dry or wet batteries combined.

OUR PRICES ARE THE LOWEST.

MANUFACTURED BY THE

Nungesser Electric Battery Co.,

CLEVELAND, OHIO, U. S. A.

Western Representative, THOMAS C. GRIER, 126-130 Jackson Boulevard, Chicago, Ill.

SIZE, 2½ in. dia. x 6 in. High.

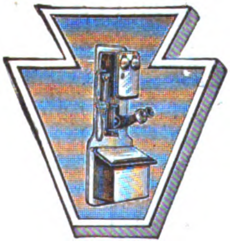

Keystone Electric Telephone Co.

MANUFACTURERS OF HIGH-GRADE

TELEPHONES AND SWITCHBOARDS

TOLL LINE EQUIPMENT

Exchanges Equipped in Every Detail

WRITE FOR PRICES

Office and Factory, 565 Old Ave., PITTSBURG, PA.

Digitized by Google

"It is one of the best publications of its kind that comes to our office, and we wish you much success."

MOORE & SON, Decatur, Tenn.

IF THE BEST IS
GOOD ENOUGH FOR YOU

YOU WILL BE SATISFIED WITH THE

Telephone Magazine

The Oldest Independent Telephone Paper in the World.

Each Number contains some interesting and instructive articles on

Exchange Construction and Operation, Telephone Apparatus, Switchboards, Toll Lines, Line Construction, Protective Devices, Central Energy and Other Systems, Telephone Troubles

And a Monthly Digest of

TELEPHONE AND KINDRED PATENTS.

EIGHT CENTS A MONTH PAYS FOR THE BEST TELEPHONE PAPER, OR A DOLLAR BILL WILL BRING THE PAPER REGULARLY FOR A YEAR.

NEWSDEALERS SELL IT. SAMPLE COPY FREE.

Address *Telephone Magazine*

Medinah Temple, CHICAGO, U. S. A.

THE DEPENDABLE KIND

AMERICAN
SAMSON BRIDGING
No. 36.

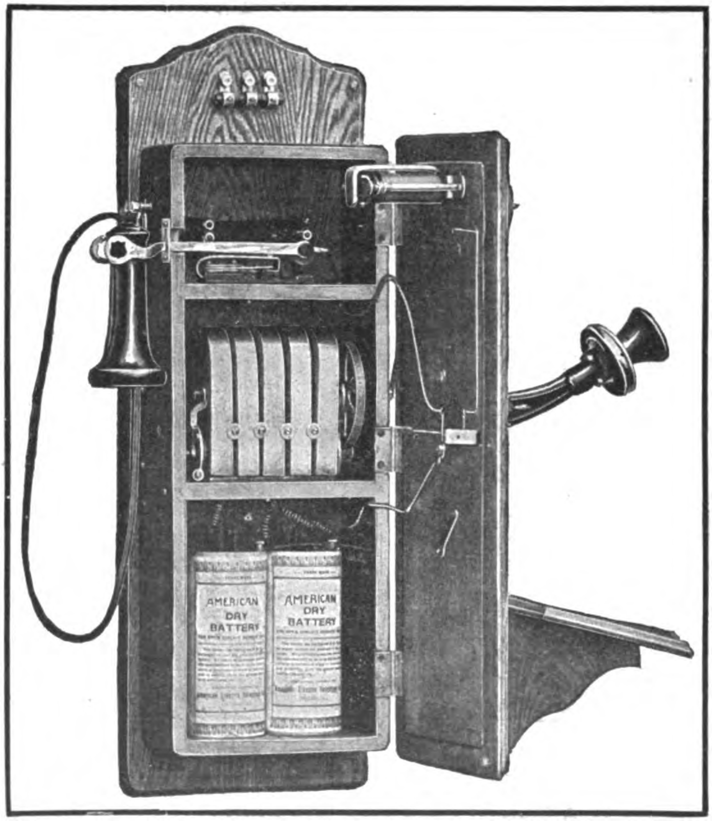

American Samson Bridging Telephone equipped with the well-known Gold Electrode Transmitter, Bell Style Receiver, with concealed cord connections, self-contained switch hook, patented lightning arrester, silk insulated ringer coils wound to 1,600 ohms and with a Samson 5-bar Bridging Generator, making it one of the most powerful and efficient telephones on the market :: ::

MANUFACTURED BY AMERICAN ELECTRIC TELEPHONE COMPANY, CHICAGO.

Digitized by Google

To the Public.

In a recent issue of a certain publication appeared a glaring advertisement containing the statement that a certain concern is the owner and has the exclusive right to manufacture and sell Cable Terminals, Distributing Boards, Fuses and Protective Devices, as well as all other electrical devices covered by my patents and applications, and threatens prosecution under its alleged right.

To those not familiar with the case I will say that the Patent records at Washington show that I own the entire right and title to the following patents covering the above mentioned apparatus.

The Cable Terminals are covered by patents No. 428,564, dated May 20, 1890, application for which was filed Dec. 10, 1888. No. 704,439, dated July 8, 1902, application filed July 29, 1896. No. 707,049, dated Aug. 12, 1902, application filed July 29, 1896. No. 707,051, dated Aug. 12, 1902, application filed Aug. 29, 1896.

The Iron Frame Distributing Boards and Protectors are also covered by the above four (4) patents.

The Fuses are covered by patent No. 711,921, issued Oct. 21, 1902, application filed July 29, 1896.

The Sectional Strip Distributing Board is covered by patent No. 684,602, dated Oct. 15, 1901, the application being filed April 17, 1899.

The Individual Subscribers Station Protector is covered by patent No. 707,050, dated Aug. 12, 1902, application for the same being filed July 29, 1896; No. 704,439, dated July 8, 1902, application filed July 29, 1896, No. 428,564 dated May 20, 1890, application filed Dec. 10, 1888.

Pole Top Cable Terminals are covered by patent No. 641,374, dated Jan. 16, 1900, application being filed Feb. 21, 1898.

The Heat Coil is covered by patent No. 704,439, dated July 8, 1902, application filed July, 29, 1896.

In addition to the above enumerated patents I am the owner of twenty-six (26) patents and applications for patents covering Electrical Devices, some of which will more completely cover the above mentioned apparatus. That I have some color of right to these patents is proven by the fact that I have already instigated ten suits for infringement of my patents in the United States Courts and have deposited $5,000.00 in cash for bonds, *but I am not defendant in any patent suit. These are significant facts.*

FRANK B. COOK

MANUFACTURER, UNDER UNITED STATES PATENTS, OF

Combined Cable Terminals and Protectors, Lock-Nut Cable Terminals, Pole Top Cable Terminals, Lightning Arresters, Strong Current Protectors, Sneak Current Protectors, Heat Coils, Line Fuses, Copper Test Connectors, Terminal Strips, Distributing Boards, Main or Intermediate. Any combination of above mounted on iron or wood.

I guarantee satisfaction with my apparatus, and also guarantee protection against prosecution for infringement under my patents.

240-244 W. Lake St. - CHICAGO, U. S. A.

Digitized by Google

Willard L. Candee, H. Durant Cheever, Managers.

1889, Paris Exposition—Medal for Rubber Insulation.
1893, World's Fair—Medal for Rubber Insulation.

Geo. T. Manson, Gen. Supt
W. H. Hodgins, Secretary.

OKONITE TRADE MARK

THE OKONITE CO., Ltd.,
SOLE MANUFACTURERS OF
OKONITE WIRES, OKONITE TAPE, MANSON TAPE
CANDEE WEATHERPROOF WIRES.
253 Broadway. NEW YORK.

THE
CONLEY FOIL COMPANY
TIN FOIL
FOR ELECTRICAL APPARATUS
521 to 541 West 25th Street, NEW YORK

THE
Royal Trust Company
CHICAGO
Acts as Trustee for Bond Issues
WRITE FOR TERMS

CHAS. C. BULKLEY
PATENT LAWYER
Telephony a Specialty
1460 Monadnock CHICAGO

Invites Correspondence
HENRY A. COIT
Laclede Building, - ST. LOUIS
FINANCES and CONSTRUCTS
TELEPHONE PROPERTIES
Organization Construction

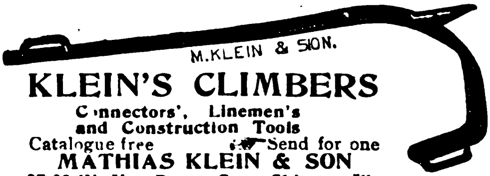

KLEIN'S CLIMBERS
Connectors', Linemen's and Construction Tools
Catalogue free Send for one
MATHIAS KLEIN & SON
87-89 W. Van Buren St., Chicago, Ills.

Please Note.

Our entire plant was destroyed by fire May 10th. We are glad to say, however, we are

"S. D. B. S. I. T. R."

again, ready for business, and are filling orders as usual, and we solicit your business and assure you same shall have our best attention and be appreciated.

Yours very truly,

Central Manufacturing Co.,
Chattanooga, Tenn., U. S. A.

New York
Insulated Wire Co.
CHICAGO BRANCH
192 South Desplaines Street
CHICAGO, ILL.
Makers of All Kinds of Rubber Covered Wires and Cables.
Main Office: NEW YORK
Branches: BOSTON, SAN FRANCISCO, CHICAGO

Standard Underground Cable Co.
BARE WIRE, INSULATED WIRE, CABLES.
Wire Cables and Accessories for Telephone use, a specialty.
FOR PRICES AND INFORMATION, ADDRESS
PITTSBURG, Westinghouse Bldg. NEW YORK, 56 Liberty St. PHILADELPHIA, 1225 Betz Bldg. CHICAGO, 322 Rookery. SAN FRANCISCO, Mills Bldg. BOSTON, Tremont Bldg.
FACTORIES: Pittsburg, Pa, Oakland, Cal., Perth Amboy, N. J.

Please mention TELEPHONE MAGAZINE in writing to advertisers.

Digitized by Google

᏿elephone Magazine

Copyrighted, 1902, by Carl E. Kammeyer. Entered at the Chicago Postoffice as mail matter of the second class.

VOL. XX. CHICAGO, OCTOBER, 1902. No. 133.

HOW AND WHY THE ORIGINAL INCREASE IN TELEPHONE RATES CAME ABOUT.

BY FRED DE LAND.

No other factor entering into the cost of supplying telephone service has received the earnest, the thoughtful and the thorough study on the part of men made competent by long experience in handling every phase in the problems involved, as well as on the part of men whose names are synonymous with successful organization of important public-service functions other than the telephone, as the subject of reasonable telephone rates. And the more carefully we investigate, the more clearly stands out the fact that from the beginning the Bell rate has been honestly predicated on cost of production plus a reasonable return on the actual investment.

These are familiar facts to many, but to others, they may appear only as a possibility unless concisely yet clearly shown just how and why the Bell flat rate was first increased, and then how and when and why the measured service rate came to be universally adopted by the Bell companies, and now is being taken up by the more progressive among the Independent companies.

But to portray all these facts necessitates our going back more than twenty years, say to 1879. That many profitable transactions in telephone stocks were successfully carried through during 1879-80 and '81, is common talk among the graybeards. For instance, the Drawbaugh claim sent Bell stock tumbling down more than fifty points, and created such a flurry among timid holders that many unloaded at half price, only to have their misery magnified a few weeks later when Bell stock jumped upward nearly ninety points in one week. Yet, while many Bell stock transactions were profitable, as were the Everett-Moore stock manipulations a year ago, there are many records showing that the pioneer Bell telephone exchanges were not profitable producers from the operating standpoint, the outgo exceeding the income in many instances.

Now this unprofitable condition of affairs is easily traced to the following causes: First, the exploiting of an entirely new and undeveloped invention in an untried field. Second, the entire absence of proper material and suitable equipment, all of which had to be first thought out and planned, then manufactured, then tried and modified, improved and altered many times, and then replaced by something simpler or more serviceable that in turn gave way to further improvements. Third, a public scarcely comprehending how to properly use the service, its utility or its value, and requiring careful education to perceive its economic advantages applicable to every phase of business life. Fourth, a destructive competition that built four exchanges where one was amply sufficient in the pioneer days of 1879, when the public in general still looked upon the telephone as "Bell's toy," and with the usual accompaniment of an indiscriminate cutting of rates. Fifth, the absence of all recorded and exact data on the cost of supplying service and the cost of properly maintaining a plant, either on the part of the Bell or of the competing companies.

Strange as it may appear, there is no more foundation for the statement that the Bell company has enjoyed a complete monopoly of the ever-widening telephone field, than there is that the Standard Oil Company monopolizes the oil trade, or that the so-called "sugar trust" controls all the sugar business of this country. The Standard Oil Company sells about two-thirds of all the oil used in this country, and the scope and immensity of its

Digitized by Google

transactions and the cohesiveness, flexibility and magnitude of its organization have won the admiration of the financial world. Yet, there are hundreds of other oil companies and dozens of oil refiners, all aggressively competing for the oil trade. So the Bell Company, though it has invested more than two hundred millions in the telephone field, has to-day and has always had a large number of competitors, and has never enjoyed a monopoly of the telephone business save in the ever-increasing comprehensive scope of its service. This statement appears necessary in view of frequent reference to competing telephone companies "way back in 1879," as many people imagine that telephone competition dates only from 1893, when the fundamental Bell patent expired.

But leaving out of the question all reference to the number of competing telephone exchanges then existing, some of which were far stronger than the Bell, it appears that there were, in 1879, more than 400 licensee Bell telephone companies, each operating under its own management, governed by its own policy and supplying service at such rates as each company, regardless of the experience or of the needs or rights of other and older companies, thought best adapted to meet the views of local patrons, or to serve in profitably manipulating stock values, or to meet destructive competition. An analysis of many of these low rates so arbitrarily established, indicates that possibly they were adopted on some dice-throwing plan, and in entire disregard of the actual cash investment in construction and equipment, and in utter ignorance of the two most important factors entering into the new problem that was believed to be so easily solved; the factors of maintenance and depreciation that had their birth in the costly yet crude and primitive character of the early equipment and line construction, and gained their growth in the rapid and expensive development of an industry yet "in its transition stage."

As the first commercial telephone exchange in the world was opened in New Haven, in February, 1878, only a year previous, probably no one can be blamed for the deplorable rate condition just cited. For the supplying of telephone service from a central exchange was not only a new and unfathomed undertaking, but each pioneer in 1878-79 was practically compelled to enter a trackless field and blaze his own way to success—or retreat in failure. Hardly had these pioneers purchased the right to operate under Bell patents, and got fairly under way with all available funds invested, than unlicensed competition began to creep in and cut even the low rates of these pioneer days. And, finally, as a crown to all their other sorrows, these early Bell licensees had to face that most exasperating of all foes, a competitor better prepared, more aggressive, possessing more efficient equipment, and seemingly having equal rights with the Bell.

For during the winter of 1877-78, the directors of the Western Union Telegraph Company had been purchasing outright or securing control of every device that gave promise of improving the service of the Gray-Dolbear system which it was preparing to exploit. Edison's carbon transmitter, the induction coil covered by the Page patents, the serviceable invention of Phelps, as well as many others of minor importance were all secured by the Western Union Telegraph Company, to aid in increasing the commercial availibilities and efficiency of its telephone service. Then, having telegraph offices and agents in nearly every city east of the Missouri, pole lines and franchise rights, trunk lines and switchboard equipment, it was not long before its aggressive policy compelled the Bell licensees to face the bitter truth that the Western Union had more telephone exchanges in operation and was doing a far larger volume of business and giving a better service than it was possible for the Bell licensees to give without infringing on the patents of Edison and others.

Then the parent Bell Company realized that the beginning of the end for itself or its competitor was at hand. It must either destroy, cripple and defeat or absorb this powerful competitor, or it would be absorbed or driven from the field. For telephone users were already clamoring against the injustice and economic waste in being compelled to use the telephones of two or three competitive systems to reach all telephone subscribers in a city, each having only a few sub-

Digitized by Google

scribers and covering but a limited area and with no toll line connections.

So, on September 12, 1878, the parent Bell organization brought suit against one Peter A. Dowd, an agent or licensee of the Western Union Telegraph Company, who claimed that Elisha Gray was the first inventor of the telephone, and that Amos E. Dolbear invented a telephone prior to Bell. This suit was for the infringement of the fifth claim of Bell's earlier telephone patent, which reads: "The *method* of and apparatus for transmitting vocal or other sounds telegraphically as herein described, by causing electrical undulations similar in form to the vibration of the air accompanying the said vocal, or other sounds, substantially as set forth."

After many consultations and much research, the Western Union officials were advised by their own counsel that the breadth of this one claim would insure a monopoly of the telephone business to the owner of that patent, regardless of the improved character of the instruments or equipment that might be utilized, or the efficiency of the competing service. The counsel further advised these officials to plan the bringing about of a consolidation of the competing telephone interests under circumstances that would redound to the proverbial astuteness of these gentlemen. This suggestion was adopted and so successfully were the negotiations carried out that fourteen months after the Dowd suit began, an agreement was entered into on November 10, 1879, that enabled the parent Bell Company to absorb all the telephone business of the Western Union—its principal and really only practical and powerful competitor. Moreover, the Bell Company secured an exclusive license of all the inventions, patents and devices relating to telephony that the Western Union had been so assiduously gathering. And it further bound its powerful competitor to assist and co-operate in the work of developing and extending the Bell service, and, so far as circumstances would allow, to permit the use of its pole lines and fixtures, and to share its right of way, franchise rights and other similar privileges whenever same were found essential in the building of new Bell lines.

Although the Western Union had been in the telephone business less than two years, it had expended nearly a million dollars in equipment, material and labor, and had installed or owned 56,217 telephones. Its telephone property in Chicago was valued at a sum three times greater than the Bell property, and in New York at one-third more than the Bell. Circumstances conspired to delay an equitable adjustment of property interests in New York City for nearly a year, but finally the Bell property was appraised at $360,000 and the Western Union at $480,000.

Having absorbed its principal and only powerful competitor and realizing that the decision of the higher courts would soon handicap all other aspirants for telephone powers, the parent Bell began to infuse new vitality in its licensees. But these pioneer companies had already perceived how unity of purpose and centralization of efforts would enrich each other, how isolation and bankruptcy seemed synonymous, and that a telephone system was not a local issue, but worldwide in its sphere of usefulness and availability. Hence, as their experience broadened, consolidations of these Bell licensee companies followed in natural sequence, till in the beginning of 1883, the number of licensee companies was reduced to 169, operating 793 exchanges, and only a small percentage of which were found profitable. While the second year in the Twentieth century finds but 40 Bell licensee companies, less than onetenth the number operating in 1879, yet supplying service from 1,411 exchanges and 1,594 branch offices to 1,020,647 subscribers.

The reason why these primitive telephone exchanges did not prove profitable properties to the financial satisfaction of the stockholders, so far as revenue and expense were concerned, though originally yielding rich returns to the promoters, is clearly explained in the annual report of the directors to the stockholders of many of these companies. And these reports also show how the original increase in Bell telephone rates came about.

In 1885 at the stockholders' meeting of a company that had absorbed a dozen or more small companies, it was stated that, "At the time this company was

Digitized by Google

organized the delusion still existed even in the minds of competent telephone managers, that at the rates then prevailing, the business of companies operating exchanges was highly profitable; and while all, and more than all of the revenue was at once absorbed by the operating expenses and the cost of the plant, in many of the companies *much too large a proportion of this expenditure was charged as development,* new capital was called in, and large dividends paid. Thus it was inevitable that with the adoption of conservative methods, the actual results of the business should prove disappointing to those who had invested in the confidence of large returns."

Bear in mind that that report is seventeen years old, and is the report of the directors to the stockholders of a consolidation of Bell licensee companies. The report continues:

"The prospective profits of this company were largely overestimated, and within the first year of its existence the necessarily *large expenditures for the maintenance, improvement* and extension of the plant had forced upon our directors the conviction that the cost of conducting the business was, and must continue to be, largely in excess of what had been anticipated, and that the schedule of rates for subscribers must be revised, in order that even a moderate return should be realized by stockholders on their investment. The careful analysis of the business of the several exchanges made during the past summer, developed the fact that fully one-third of the number, which, *while the cost of repair had been left out of sight,* had been rated as profitable branches of your property, were in reality *not earning sufficient to pay the current expenses,* setting aside altogether the question of depreciation and interest upon plant and equipment." (This is not a report on the Everett-Moore properties in 1902, but a report on Bell properties in 1885.)

In other words, these conservative financiers had found out that they had amalgamated these very unprofitable Bell licensee companies, into what threatened to be one very large and costly white elephant, unless practical business methods ruled.

Now the imperative need of immediate and decisive action so graphically portrayed in the foregoing report, will be the more apparent when we recall the fact that a thorough classification of the rental rates charged for telephone service throughout the territory occupied by this consolidated company, showed "a total of *184 different rates,*" the subscribers in one city alone "paying no less than *fifty-three different rates.*" The report also showed that these rates had been "established to a great extent without reference to the character and the differing value of the service; and were inequitable, in that while many were paying amounts remunerative to the company, others enjoying equal facilities in the same or similar exchanges, paid less than the cost of furnishing the service."

Thus the directors felt that "but one course appeared in justice both to the stockholders and the subscribers— to fix uniform rates for the same class of service, but less in the smaller places than in the larger, basing the difference on the fact, that in the larger exchanges, established in cities of commercial importance, the average use of the telephone is greater, the service is more valuable, and is furnished at greater cost to the company per station."

So in the month of February, 1885, all the towns and cities in the four states wherein the right to operate under Bell patents was controlled by this consolidated company, were divided into two classes, the one having a population of less than 20,000 inhabitants, the other that number or more. For the larger cities, the rates for telephone service for an instrument on an individual circuit, for subscribers located one-half mile or less from the central office, was $75 a year for both residences and business houses, where there were two subscribers on a line one mile or less from the central office, the rate would be $60 a year for each subscriber, and where there were three or more subscribers on a line a mile or less in length from the central office, the rate was $50 a year for each subscriber; and these rates prevailed for business houses as well as residences. For cities and towns having a population of less than 20,000, no distinction was drawn between the rates for a business telephone and for one placed in a resi-

Digitized by Google

dence, and if individual circuits were used, the rate in each case was $60 per year. But a difference of $6 a year was made when there were two or more subscribers on one line; the rate for two business subscribers on a line a mile or less in length being $48 each, a year, and for three or more on a line, $42 each, a year.

The report states that this "new schedule while operating, as a rule, to advance the rates, leaves the amount paid by many subscribers unchanged, while with some it has effected a slight reduction."

The outcome was a loss of nearly 3,000 subscribers during the year, the total number being reduced from 18,244 to 15,526. But "the larger number of those who withdrew had been receiving service at rates involving loss to the company." And "we are still operating a number of small exchanges at a loss," was the statement of the directors, two years later.

DEFEAT OF BELL TELEPHONE CO.

FROM THE NEW CASTLE (PA.) NEWS.

The Central District Telegraph & Telephone Company, or Bell Teelphone Company as it is popularly known, has lost the injunction suit brought against it by the City of New Castle. Judge Emery A. Walling of Erie, has made the following decree in the matter:

"And now, October 1st, 1902, this case came on for final hearing and after argument thereof by counsel, and upon due consideration it is ordered, adjudged and decreed that the said defendant, the Central District and Printing Telegraph Company, its officers, agents and employes, and everyone of them be, and they are hereby perpetually restrained and enjoined from erecting any telegraph or telephone poles in new locations upon any of the public streets or alleys of said city of New Castle except at locations hereafter to be given or approved by the proper municipal authorities of said city; reserving, however, the right to grant the defendant relief should said city authorities refuse to give or approve such locations upon the defendant's application therefor. This decree, however, shall not be so construed as to prevent the defendant from repairing its lines by replacing old poles with new poles on same locations wherever it may deem proper to do so.

"It is further ordered that the defendant pay costs of the suit."

The final opinion was handed down in open court Monday morning. In part, the paper is as follows:

"The bill in this case was filed to restrain the defendant corporation from extending its telephone lines by the erection of poles, etc., on the public streets, except under supervision of the authorities. The main question involved is the right of the city to regulate and supervise the location and construction of new lines of telegraph poles upon its public streets.

"The case was heard upon the bill, answer, re-application and testimony. The facts found are as follows. Here are stated the standing of the city as a third-class city, and the corporation under its charter. The ordinance giving the company rights under certain conditions on the streets of the city is cited. It was passed April 24, 1882.

"At this time the Western Union was the only company having poles on the city streets. The C. D. & P. T. Co. at once proceeded to exercise its rights under the ordinance, complying with the conditions exacted by the city. The Postal Telegraph Company, the New Castle Telephone Company, the Long Distance Company and the Electric Light and Railway Company and the Mahonin Street Railway Company have since erected poles on the streets.

"The city passed an ordinance, approved June 6, 1899, providing that any person, company or corporation desiring to have poles located must do it under city supervision.

"In the winters of 1898-1899 the defendant made a general plan of proposed extension of its lines, which received verbal approval of the city engineer, subject to changes that might be necessary to satisfy property owners.

"Between January 5, 1898, and June 5, 1895, some poles were erected as by this plot, but on October 24, 1901, the city engineer filed a notice in writing that all future locations of poles must be approved by councils.

"On October 29, 1901, and recently before that time the defendant entered on

Digitized by Google

Jefferson street and other public streets, and were in the act of erecting poles when an injunction was filed in the case, and later modified, leaving out the words 'illegally and without authority,' that being a point of law.

"The company did not apply for permission to erect these poles and refused to desist when ordered by councils.

"The city never gave permission for the erection of these poles, and the city engineer was not locating, supervising or approving the locating of the poles complained of.

"The poles which the company were engaged in erecting were necessary for the proper carrying on of its business. The value of the plant of the company in New Castle is worth $130,000; 1,700 telephones are in use and the business is steadily increasing.

"There are thirteen conclusions at law setting forth the right of the city to control and supervise the location and erection of telegraph and telephone poles and wires on its streets and highways, and that any grant said company received was subject to such power."

COSTS MORE TO TALK.

Wisconsin Bell Telephone Company Will Advance Toll Rates All Over the State on October 1st.—Two-Minute Schedule to Supersede the Minute Schedule—Big Advance in Rates.

FROM THE OSKOSH (WIS.) NORTHWESTERN.

Beginning October first, the Wisconsin Telephone Company will again increase its rates, this time on the toll lines. For some time past a cheap rate has been maintained by the establishment of a one minute schedule, but this is to be done away with and with the exception of the city of Milwaukee, after October first, no one will be permitted to talk on less than a two minute schedule. Manager Gallagher in speaking of the matter said that three years ago when the Erie Telephone Company absorbed the Wisconsin Telephone Company territory, the one minute rate was introduced, and fixed at one-third of the then existing three minute rate, that company believing that a large volume of business could be procured and handled profitably on this basis. He says that the toll lines of the company are used only during the busiest hours of the day. Ninety per cent of this business is for the short distances (under forty-five cents for three minutes) and the revenue from this service has fallen off sixty-six per cent. The time of all concerned, and the use of the lines necessary to getting the parties together, for which no charge is made, is very much greater than the revenue-earning period, and as it costs no less to set the machinery in motion for the one than for the three minute conversation, no reduction whatever has been effected in the cost of operation. He says that there is some demand for one minute business, and this demand will be met, but it will not be continued on a basis which those still in the management pronounced at the time illogical and disastrous.

Instead of making one minute rates two minute rates will be charged at twice, three times and in some cases four times the former cost, but ordinarily it will make little difference, he says, as there are but few conversations which can be completed in one minute.

Under the old system the rates to Milwaukee were fifteen cents a minute. The new rate will be twenty-five cents for the first minute, thirty-five cents for two minutes and fifteen cents for each additional minute. The rate to Fond du Lac, Ripon, Neenah, Appleton and Kaukauna was three cents a minute but hereafter it will be two minutes for fifteen cents and five cents a minute thereafter. For Eau Claire and Chippewa Falls the rate heretofore was $1.05 for three minutes. Now there will be a cheaper rate, as a two minute schedule will be in force. The rate for two minutes will be seventy cents and thirty-five cents for each additional minute. To Beloit, the former rate was twenty cents a minute. Hereafter it will cost fifty cents but two minutes' time will be allowed with a rate of twenty cents for each additional minute. The Waupaca rate was ten cents a minute. Hereafter it will cost twenty cents for two minutes as the lowest rate and ten cents for each additional minute. Other rates are about the same in proportion as those quoted and no toll rate will be less than ten cents.

Digitized by Google

THE TELEPHONE WAR OPENS.

City Counselor Files a Test Suit at Jefferson City—Mandamus Proceedings to Compel the Company to Observe the New Rate Ordinance—Temporary Writ Issued—Maximum Charge Is $60.

THE KANSAS CITY STAR.

The fight to force the telephone company to obey the ordinance fixing maximum charges for telephone service for which the city counselor has been making preparations was begun to-day. R. J. Ingraham applied to Justice Marshall for a writ of mandamus to make the company obey the ordinance. A temporary writ was issued at the relation of James W. Garner.

The temporary writ is returnable October 14 before the court en banc.

The petition alleges that the common council of Kansas City has passed an ordinance fixing the yearly rental for telephones at $60 for business houses and $36 for residences and that the Missouri and Kansas Telephone company has refused to accept these rates and still persists in charging the old rental. The petition concludes by asking the court to compel the telephone company to accept the rates fixed by the council. The proceeding will test the right of cities to regulate telephone rates.

There will be a fight when the question of a permanent order shall come up in the supreme court. The company alleges that it cannot afford to furnish telephone service at the prices named in the city ordinance and when it gets into court will probably claim also that the city has not the power to regulate the prices for telephone service.

The purpose of the city counselor is to test the law by asking the court to compel the telephone company to furnish a telephone to some citizen at the prices fixed by the ordinance. James W. Garner made a tender of $15 for three months' rental of a telephone a few days ago and it was understood at that time that Mr. Ingraham would use Mr. Garner's name and the circumstances of his tender of telephone rental to the company as the basis of his suit. The ordinance under which the proceeding is to be brought fixes $60 a year as the maximum price that can be charged for a business telephone.

The suit would probably have been brought on behalf of the city, but the company offered telephones to the city for $42 a year early in 1901 and has within the last few weeks made an offer to the city of telephones at $48 a year. The price is just half the price charged for business telephones of the best class with long distance transmitters. The city has refused to consider any proposition for new telephones and the company has left the old, out of date box telephones in the city hall. Nobody can use them and the city hall war with the company is sincere and bitter. It might have made a better case if the fight could be for the city, and it is possible that Mr. Ingraham can connect the city's interest with the fight, but if the suit had been brought for the city direct the company's answer would probably have thrown it out.

The first man who made a tender of payment for three months' rental under the ordinance went to the telephone office from the board of trade. He laid $15 on the desk of the contracting agent and said he tendered him that amount to pay for a telephone three months.

"All right," the agent said, bringing out some blank contracts.

He wrote a contract for limited service. The company has a limited service system at $48 a year. It is on the basis of about five cents a call.

"What are you doing?" the man with the money asked.

"Writing a year's contract," the agent said.

"But I dont' want a year's contract."

"Well you can throw it up if there is good reason."

"By the way," the agent resumed, "there is $3 coming to you on this contract," and he threw three silver dollars on the desk.

This was all unexpected and the visitor went out of the room to think it over. Then he came back and got his $15, but refused to sign the contract. He left without getting his telephone. The measured service propositions confused him and he did not appear again.

Extensive improvements are now being made by the Somerset County Telephone Company of Somerset, Pa., in order to extend its service to the numerous new coal towns being developed in the country.

Digitized by Google

MONTHLY DIGEST OF TELEPHONE AND KINDRED PATENTS.

EDITED BY ARTHUR F. DURAND, OF THE CHICAGO BAR.

Copies may be had, postage paid, by enclosing 5 cents for each one. Address inquiries in care of this magazine or to the Commissioner of Patents, Washington, D. C.

ISAAC M. WARNER, UNION CITY, MICH. No. 708,277, SEPT. 2, 1902. TELEPHONE OR TELEGRAPH POLE.

In this pole the cross-arms 13 are mounted upon the bolt 10, which latter projects from the upper end of the tubular pole 1. These cross-arms, of any desired number, are separated by the block 14. The arm and blocks thus arranged are clamped in place by a nut 16.

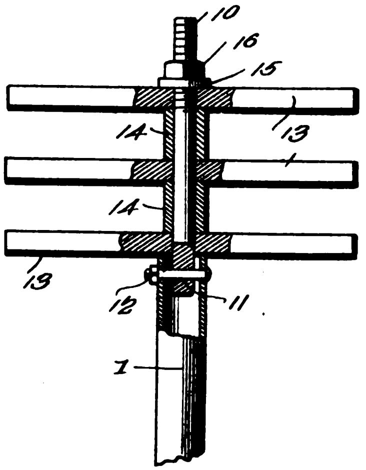

708,277—Telephone or Telegraph Pole.

SYLVESTER P. GREY, FORT WAYNE, IND., No. 708,138, SEPT. 2, 1902. COIN-CONTROLLED TELEPHONE.

This is an improvement on a former invention of Mr. Grey's. In this patent he has claimed the improved device for delivering the coin to the patron, in case no connection is made, and also the improved arrangement by which this device, as well as the opening of the call box, is controlled exclusively by the operator. The coin-arresting disk and the locking pawl are claimed in another application.

When the subscriber desires to make a telephone call, he calls the central station in the usual manner; but before the receiver-hook 18 can be elevated to close the circuit in the usual manner the disk 16 must be rotated forward to the position shown in dotted outline in Fig. 2. This, however, can be done only by means of a coin or its equivalent. By dropping a proper coin—as, for example, a nickel 20—in the upper open end of the said coin-channel it will roll down by gravity and be received by the said recess 19 of the disk 16, Fig. 2. The coin 20 nearly fills the space between the vertical edge of the recess 19 and the adjacent edge of the said pawl 23, whereby the force of the retracting-spring, (not shown), by which the said hook 18 automatically assumes the position shown in Fig. 2, will force the lug 21 forward into contact with the upper portion of the said pawl 23, thereby forcing the free end of said pawl forward against the tension of the said spring 26, as shown in dotted outline in Fig. 2.

The lug 22 is normally slightly out of contact with the lower end of the said pawl, as shown, whereby a sufficient forward movement of the disk 16 to enable the lug 22 to engage ordinarily the lower end of the pawl 23 will, when the coin 20 is in position in the recess 19, force the said pawl forward, thereby enabling the lug 22 to pass the said pawl without any contact therewith, after which the said coin will freely pass by gravity downward between the said disk and the said pawl to the lower portion of the said coin-channel 5, where it will be again arrested in the following manner: When the disk 16 is rotated forwardly, as described, to the position shown in dotted outline in Fig. 2, it will readily pass the free end of the finger 29 until the said end of the finger 29 is engaged by the lug 22, by which engagement the pawl 28 will be firmly held in the position shown in dotted outline, in which position the lug 31 of the arm 30 will project into the path of the coin and which will thus arrest and detain the same in the position shown in dotted lines and upon the slide 13. The coin 20 will remain in this position while the sub-

Digitized by Google

scriber is using the telephone or until he hangs the receiver upon its hook 18, which action rotates the disk 16 back to its normal position, thereby forcing the pawl 28 back to its normal position by the engagement of the finger 29 with the slot 27, thus elevating the lug 31 from the path of the coin, which is now free to descend by gravity into the toll-box 6 through the slot 9. Before the subscriber hangs up the receiver and while the coin 20 is detained upon the slide 13, as described, in case he is notified by the operator that the line is busy or for other reason fails to get service, the operator instructs him to push in the button 51, thereby making an electrical connection between the plates 48 and 49. These plates are in circuit with the coils 43 and 44 and are electrically connected with the main line by means of the wires 63, 64 and 65. The operator now throws

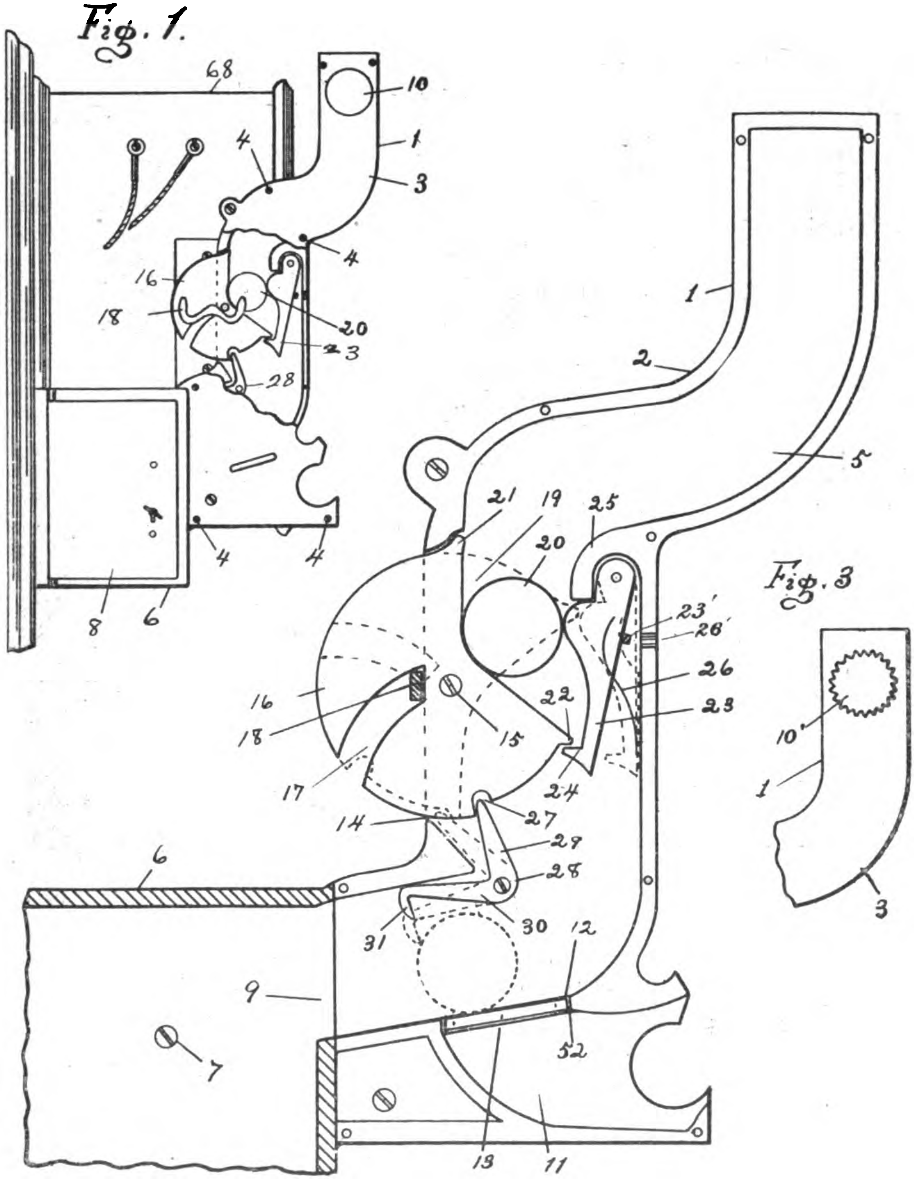

708,138—Coin Controlled Telephone.

Digitized by Google

a stronger current into the main line by means of an additional battery at the central station (not shown in the drawings), thereby energizing the coils 43 and 44 sufficiently to actuate the arm 46, whose lower end is engaged with the ister with the coin-channel 5, which will permit the arrested coin supported on said slide to drop into the channel 11, where it is accessible to the patron and can readily be removed therefrom. The subscriber now releases the button 51,

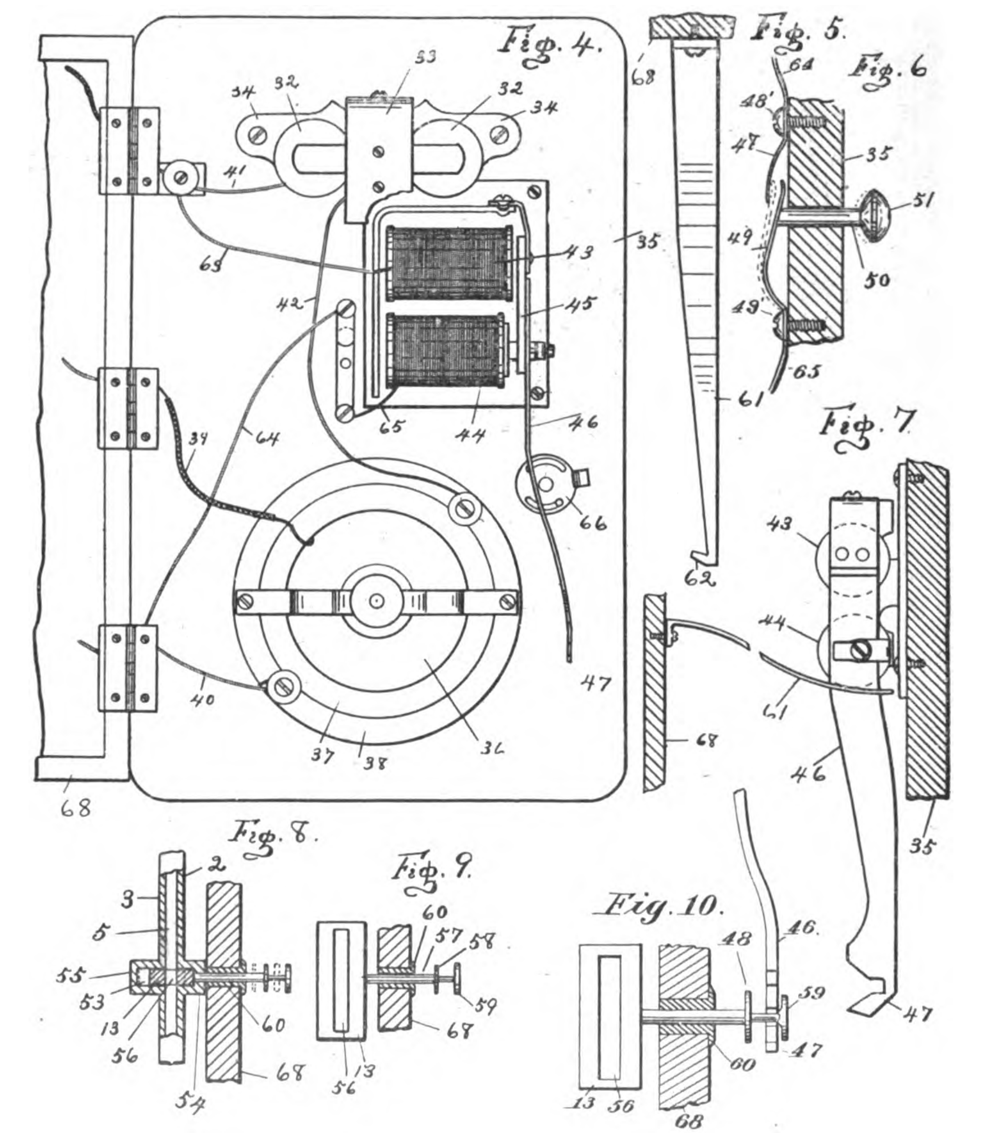

708,138.

pin 57 between the collars 58 and 59. This action of the arm 46 withdraws the slide 13 from its normal position shown in Fig. 2 and in dotted lines in Fig. 8 to the position shown in full lines in Fig. 8, thereby making the slot 56 therein register with the coin-channel 5 ... after which the spring-plate 49 will by its tension resume its normal position out of contact with the plate 48. He then hangs up the receiver on the hook 18, thereby restoring the operating mechanism to its normal position.

Digitized by Google

HENRY C. SMITH AND MARK H. WOOLSEY, SAN FRANCISCO, CAL. No. 708,761, SEPT. 9, 1902. ANTISEPTIC ATTACHMENT FOR TELEPHONE MOUTHPIECES.

In this attachment the antiseptic is held by the absorbent material 3. This material is secured in the cap 2, which is adapted to fit over the mouth of the transmitter. The portion 5 which connects the spring arms 8 and 9 is adapted to be clamped between the mouthpiece and the transmitter casing. A pivot pin 4 provides a hinge connection between the upper edge of the cap and the outer end of the arm 8. The outer end of the arm 9 is adapted to engage a notch in the lower edge of the cap.

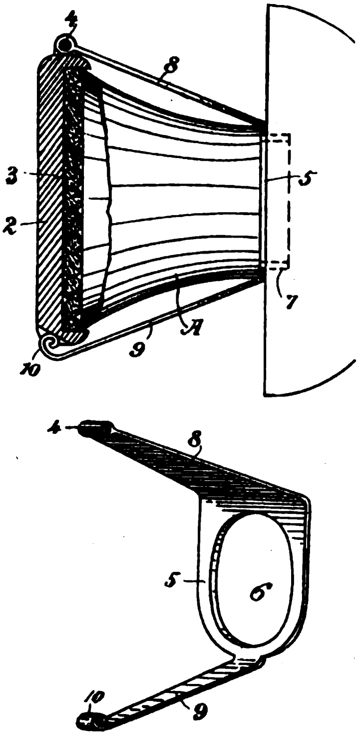

708,671—Antiseptic Attachment for Telephone Mouthpieces.

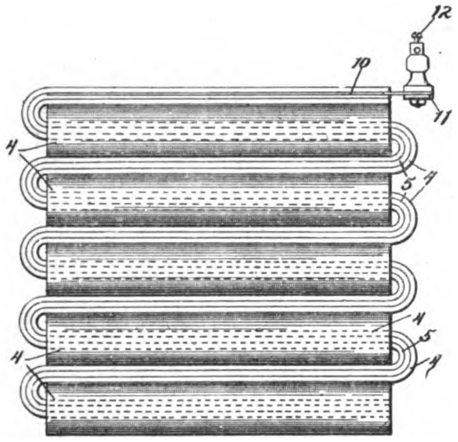

709,205—Electric Condenser and Method of Making Same.

HENRY P. CLAUSEN, CHICAGO, ILL. No. 709,205, SEPT. 16, 1902. ELECTRIC CONDENSER AND METHOD OF MAKING SAME.

In this condenser the strips are arranged crosswise and are then folded back and forth upon each other, as shown in the first figure of the drawings. This method of folding results in a condenser, such as is shown in Fig. 2. Thus constructed, any portion of the condenser can be inspected and cleaned without unfolding the strips. This is for the reason that any of the surfaces can be exposed by simply drawing the strips out in the manner shown in Fig. 3. The patent is assigned to the American Electric Telephone Company of Chicago.

COLUMBUS B. MCPHERSON, BIRMINGHAM, ILL. No. 709,351, SEPT. 16, 1902. TELEPHONE SWITCH.

The invention in this case consists of a switch for cutting out a telephone during an electrical storm. Normally,

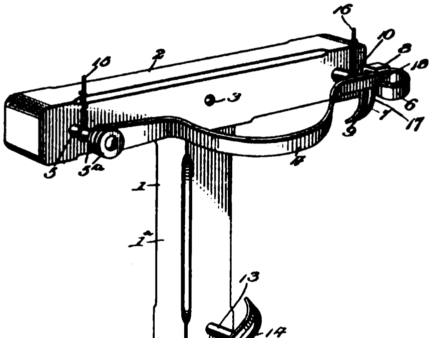

709,351—Telephone Switch.

the circuit is from the wire 15 through the switch lever 4 to wire 16, but during

a storm the lever is swung to the rest 14, which is adjacent to the grounded post 11. This cuts out the telephone and allows any lightning discharges which may get upon the line to jump from 14 to 11 and thence to earth.

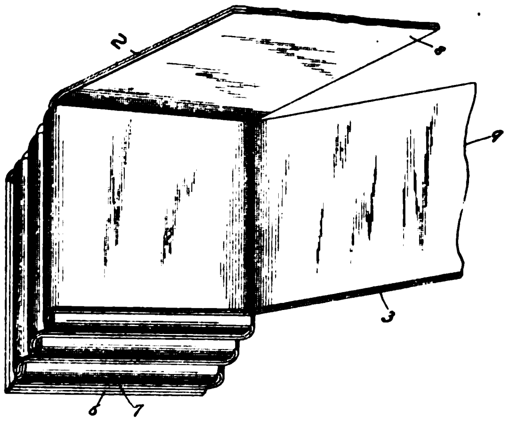

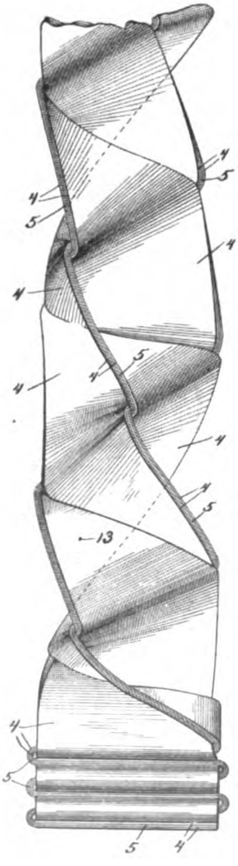

709,205—Electric Condenser and Method of Making Same.

*For illustration of Fell Patent, No. 708,539, see page 174.

JOHN M. FELL, ARLINGTON, N. J. No. 709,437, SEPT. 16, 1902. APPARATUS FOR COMPOSITE SYSTEMS OF SIMULTANEOUS TELEGRAPHY AND TELEPHONY.

This is the patent which was granted on Mr. Fell's divisional application. As already explained, this patent contains only the claims for the system, while the other patent contains the claims for the special form of line relay. The accompanying diagram shows the system in this diagram: V and W represent the two main conductors of a metallic telephone-circuit O, extending between two stations Q and Q^2, and severally constitute the main conductors of two independent ground-return telegraphic circuits O O^2 in a manner well understood to those skilled in the art. The said two telegraphic circuits are both provided at each end with grounded instrument branches or extension-conductors 8 9 and 10 12, respectively, each containing a source of current *h*, a sending-key *n*, a receiving instrument *r*, and an electromagnetic resistance or impedance-coil *f*. The said impedance-coils act to smooth the telegraphic currents, so that they will not be liable to disturb the telephonic part of the system, and they also tend to prevent the telephonic currents from being short-circuited to earth at Z through the neighboring telegraphic branches. Associated with each telegraphic extension there is also a branch to earth through a condenser *i*, the latter serving to protect the telephone-receivers from disturbance due to self-inductive discharge from the relays *r* and generally to aid the condensers *x* in graduating the telegraphic signal-currents and in dissipating the static charge of the line. The several earth connections of the system are all indicated by the same reference-letter Z. The telephone-loops F at the stations Q Q^2, respectively, are joined to the main conductors at the points 13 17 and 14 16 outside of the impedance-coils *f*, so that the said impedance-coils shall be always interposed between the telegraphic and telephonic instruments. Condensers *x* are placed at both ends of each line conductor between said conductor and the corresponding conductor of the telephone loop, and a bridge *d*, containing resistance-coils *y* and *z*, with a

ground connection between them, unites the two loop-conductors *u* and *q* between the said condensers and the telephone instruments.

The condensers *x x* serve to exclude the telegraphic currents from the telephonic loops F in a well-known manner. Each terminal telephone-loop may be completed through the call-signal-receiving relay A, the call-signal-transmitting appliance G, or the speaking-telephone circuit *m*, and the signal-receiving instrument B, included therein, but when depressed acts to cut off the said relay and to connect the loop-conductors with the terminals of the alternating-current generator G, which terminals are brought to the front contact-stops 24 and 25 of the said key. A condenser x^2 is preferably bridged between the conductors of the generator G to aid in graduating or rounding off the call-current.

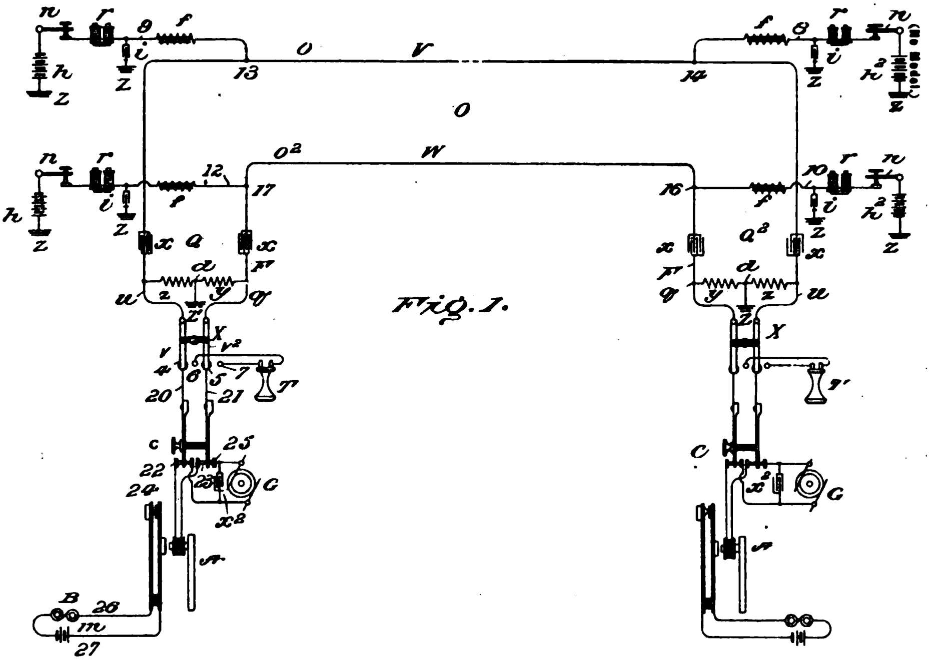

709,437—Apparatus for Composite Systems of Simultaneous Telegraphs and Telephones.

apparatus T alternatively, and a switch X and key *c* control these connections. The switch X is a two-bar switch and has two positions. When the line is at rest, the two switchbars *v* v^2 are in connection with the contact-buttons 4 and 5, respectively, and the telephone-circuit continues by conductors 20 and 21 to the signaling-key *c* and associated apparatus; but by turning the said switch to its second position, where its bars are brought into connection with the contact-buttons 6 and 7, the key and signal apparatus are disconnected from the loop, which is then switched to a connection with the telephone apparatus T. The signaling-key *c* establishes normal connection through its back or resting contact-stops 22 and 23 with the relay A, controlling the local

JOHN M. FELL, ARLINGTON, NEW JERSEY. NO. 708,539, SEPT. 9, 1902. VIBRATORY-CURRENT RELAY.

This invention relates to combined telephone and telegraph systems. The application upon which the patent was granted was divided. Only the particular form of line relay is claimed in this patent. The claims for the system are in Mr. Fell's other patent. Both patents are assigned to the American Telephone and Telegraph Company of New York. The accompanying drawings show the improved relay, as described: The relay has a permanent magnet, with electro-magnetic helices surrounding its poles or pole-pieces and arranged for connection in the main circuit, and an armature carried by a spring-bar, secured at one end

Digitized by Google

in a fixed support and resting near its other end against a stop (preferably adjustable), which serves to regulate the position of the armature in relation to the magnet-poles, preventing it from touching them and also acting to establish a nodal point in the said spring-bar. A second but lighter spring-bar, of length similar to that of the first, also has one end attached to the said fixed support and extends parallel with and near to the first-mentioned spring throughout its length, being weighted at its outer or free end. The two springs are insulated from one another at their point of support, and the two local relay contact-points are carried at their outer ends, respectively, each being secured to the inner or proximate surface of its own spring. These points may be regarded as constituting terminals of the local signal-circuit to be controlled by the relay and are normally in contact with each other. The common fixed support of the two springs has preferably an adjustable mounting, whereby the relation of the retractive force of the armature-spring to the attractive force of the armature may be adjusted, and the said fixed support and its mounting are conveniently secured to the permanent magnet, making a condensed and compact device.

ALBERT M. BULLARD, SOMERVILLE, MASS. No. 709,739, SEPT. 23, 1902. AUTOMATIC TELEPHONE EXCHANGE.

This invention is an improvement upon the automatic exchange invented jointly by Mr. Bullard and Mr. Malcolm C. Rorty. In the patent there are a number of drawings and a great many claims. Only the diagram of the system is reproduced. The patent is assigned to the American Bell Telephone Company. The inventor's description is as follows: X and Y represent two substations, with the local apparatus thereof, the line-wires leading from X to the central station being marked 45 46, while 37 38 represent the line-wires leading to the central station from Y. Let us suppose that the subscriber at substation X wishes to call substation Y, No. 350. The selector S of subscriber X is shown in Fig. 1 as having already selected that number. The three upper semi-circular flat rings 81 at S represent blocks of insulating material containing the multiple contacts at the central station with any one of which the subscriber at X may make a connection. Y's multiple contact is among them. For clearness these blocks in the diagrams are shown in the same plane instead of one above the other. So, also, the small disk U at the center of each of these plates is a section of the same vertical rotating shaft U passing up through the centers of all the plates and carrying three selector-arms—viz., 51, which swings over the contacts numbered from 101 to 199, marked "100's;" 52, which swings over the "200's," and 53, which swings over the "300's."

These selector-arms are insulated from the shaft U. Concentric with each semicircle of multiple contacts is a contact-strip 10. A fourth semi-circular block 83 below the others contains another set of contacts, called the "hundreds contact." For convenience it is made and shown like the others, with ninety-nine contacts; but in the apparatus shown in the diagram but three are needed. In other words, one "hundreds contact" is needed for each one hundred subscribers. The first contact 1 is in permanent electrical connection with the semi-circular connecting-strip 10 in the "100's" group. The second contact 2 is similarly connected with the connecting-strip 10 in the "200's" group, and the third contact 3 with strip 10 in the "300's" group. V is a separate vertical shaft rotating beneath shaft U and carrying the insulated selector-arm 55. Semi-circular block 83 has also a connecting-strip 5, which, as will presently appear, is in connection with the testing-circuit of X. At S′ is shown as belonging to subscriber Y apparatus similar to that which has been described as belonging to X. A single alternating-current generator is employed at the central station, but for convenience it is shown at two points G G′. So, too, there is but a single battery, which is indicated at several places, B B′ B^2 B^3 B^4, in order to simplify the diagram, and so, too, for ready interpretation, magnets and relays are shown at convenient places without regard to the mechanisms operated thereby. For instance, upright shaft U, carrying selector-arms 51 52 53, is rotated by the selector-magnet E, while upright shaft V

Digitized by Google

is rotated by selector-magnet D. Vertical motion is imparted to both shafts by the connecting magnet F.

Proceeding with the description of X's act of calling Y, No. 350, and making reference mainly to Fig. 1, X sets the pointer *c* of his apparatus at No. 3 and by the magnetic clutch-switch *d* closes a circuit to ground along wire 46, as follows: Alternating-current generator G, wire 11, contact 14, wire 47, relay J, hundreds selector-magnet D, line-wire 46, switch-magnet *d,* contacts 56, contacts polarized armature of magnet D to move the arm of 55 of hundreds switch K three steps forward, so that said arm is exactly above point 3, from which wire 4 leads to the "300's" group of the tens and units selector I. Subscriber X next moves his pointer to No. 50 and depresses switch *e,* thereby completing the following circuit to ground via the other side of his metallic line: generator G, wire 6, contact 7, wire 8, contact 9, selector-magnet E, relay H, line-wire 45, switch-magnet *e,* contact 54 contacts 104 of circuit-

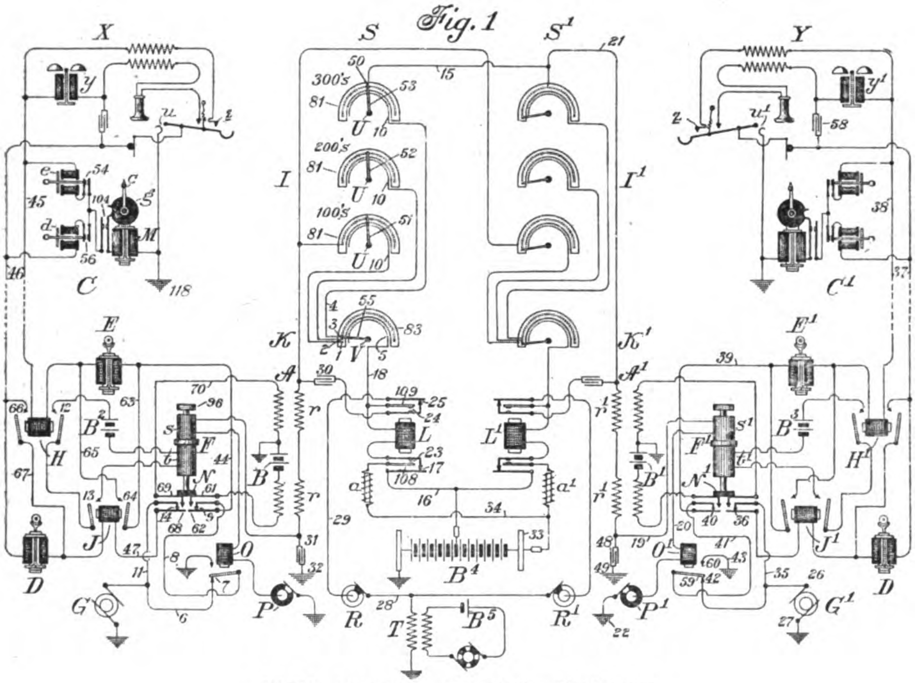

709,739—Automatic Telephone Exchange.

104 of circuit-controller *g,* magnet M to ground 118. The alternating current energizes the magnet of switch *d,* causing its armature to hold together the contacts 56. It also energizes magnets D and M, causing their polarized armatures to oscillate, thereby rotating circuit-controller *g* at the substation until it has been returned to its normal position, wherein it opens the circuit above traced, thus instantly stopping the movement of the polarized armature of magnets M and D and restoring switch *d.* Now each of the magnets M and D has received the same number of waves of alternating current, let us say in this case three waves, and said three waves have caused the controller *g,* magnet M to ground 118.

The alternating current actuates in synchronism selector-magnet E and magnet M until fifty waves have occurred, when circuit-controller *g* breaks the circuit in the same way as before, releasing switch *e* and causing the movement of the armatures of E and M to cease. The selector-arms 51 52 53 have now been rotated to a point where each is over the No. 50 of its own semi-circle of ninety-nine. When X lifts his receiver from the switch-hook, these three selector arms 51 52 53 of switch I and selector-arm 55 of switch K are brought into connection with the contact-points they are opposite; but obviously only arm 53 is in electrical con-

Digitized by Google

nection with switch K. This connecting movement is accomplished in the following manner: While X's receiver-hook is rising the contact-spring *u* unites for a moment both sides of his metallic line to ground 118, the yielding contact-spring *z* being attached to the forward contact-point of the said receiver-hook to insure connection with the main conductor 45, when the lever of said receiver-hook makes its transient contact with the grounding-spring *u*. During this brief interval alternating current flows along both sides of the line to ground. Relays H and J are thereby energized, and their contacts 12 and 13 being both closed simultaneously complete a local circuit through connecting-magnet F, as follows: Battery B^2, contact 12, contact 13, winding *t* of connecting-magnet F back to battery.

The effect of energizing magnet F is to force the arms of X's selectors into contact with the terminals which they face, thus forming a connection between the testing apparatus of X and the line of Y, No. 350. It may be here stated that to prevent accidental shifting of the selector-arms by reason of magnets D and E being actuated by alternating current at the moment when the receiver-hook of X is being lifted the relays H and J have each been provided with a second armature, whose contacts 66 and 64 when closed shunt or short-circuit the selector-magnets D and E, thereby preventing the latter from acting. The armatures of the relays H and J are so constructed as to respond more quickly than those of the selector-magnets, and the former therefore shunt or short-circuit the selector-magnets before the armatures of the latter can move. Furthermore, this short-circuiting results in the exclusion from the talking-circuit of the comparatively high impedance-magnets D and E. Returning to connecting-magnet F, which has just been actuated by the lifting of X's receiver, this magnet serves the further purpose of operating switch N, by means of which current from common battery B is supplied to the line of X in place of alternating current, thus furnishing the current necessary in a common-battery system for the transmission of speech.

After the operation of switch N the relays H and J are energized by battery B instead of by generator G, thus maintaining their two functions just described. Now assuming that Y's line is not already in use, the operation continues as follows: The above-described connections between selector-arms and contact-points establish a preliminary or testing circuit from the middle point of common battery B^4 through testing-relay L and X's selector to Y's apparatus, where, if the line of Y is not in use, a return-path to battery is found. In detail the circuit may be traced from the middle or twelve-volt point of battery B^4, wire 16, contact 17, winding of relay L, wire 18, contact-strip 5, arm 55, contact-point 3, wire 4, contact-strip 10, arm 53, contact point 50, wire 15, wire 21, windings $r' r'$ of repeating-coil A′, wire 19, low-resistance winding s' of magnet F′, wire 20, winding of relay O′, circuit-opener P′ to ground 22. This current actuates testing-relay L, whose armature-contacts transfer its winding to a twenty-four volt lead from the common battery B^4. This new circuit is from terminal 33 of battery B^4, wire 34, retardation-coil *a*, armature 108, contact 23, winding of relay L, wire 18, and thence to ground 22, as before. Tracing out the path of the testing-circuit, it will be seen that the winding s' of magnet F′ is energized, but nevertheless its armature is not drawn up, the ampere-turns of said winding being inadequate for a purpose hereinafter stated.

The armature of relay O′ is actuated, however, and its contacts alter the connection of Y's line with the generator G′. so that instead of both sides of his line being connected with the underground terminal of generator G′ one side is connected with the grounded terminal 27 and the other side left connected with underground terminal 26. There is now a difference of potential between the two sides of Y's line, and alternating current therefore passes through and rings Y's signal-bell y' along a circuit from generator G′, terminal 26, wire 35, contact 36, winding of relay J′, winding of selector-magnet D′, line-wire 37, condenser 58, signal-bell y', line-wire 38, winding of relay H′, winding of selector-magnet E′, wire 39, contact 40, wire 41, armature 59, contact 60, and ground 43 back to terminal 27 of generator G′. On

Digitized by Google

account of the high resistance of the signal-bell y′ and condenser 58 the current passing is not strong enough to actuate relays H′ J′ and magnets D′ E′.

When Y lifts his receiver from the hook, thus bridging the line with the low resistance of his telephone set, relays H′ J′ are first actuated, their armature-contacts short-circuiting or shunting magnets D′ E′ before the armatures of the latter can act and in addition closing a local circuit from battery B^1 through the winding t′ of connecting-magnet F′ and actuating its armature, which causes switch N′ to substitute direct current for alternating current, just as was done in X's apparatus when he lifted his receiver in the act of calling Y. It will be noted that the connecting-magnet of any called subscriber performs the function of a relay only, in that it operates the switch N′, but completes no circuit through the selector-arms, which are left at the 0 or normal position. X and Y may now talk over the following path, in which the use of the repeating-coils A and A′ will be understood by any one familiar with the art: X's telephone set receives current from common battery B through lower winding of repeating-coil A, spring 61, spring 62, wire 44, wire 63, contact 64 of relay J, wire 65, winding of relay H, line-wire 45, telephone set of X, line-wire 46, contact 66 of relay H, wire 67, winding of relay J, wire 47, spring 68, spring 69, wire 70, upper winding of repeating-coil A, back to battery. Y's telephone set is energized through repeating-coil A′ over a circuit identical with X's. The two repeating-coils are connected together inductively along the following path, beginning at X's side: Ground 32, condenser 31, windings r r of repeating-coil A, condenser 30, contact 24, armature 109, wire 18, strip 5, selector-arm 55, contact-point 3, wire 4, strip 10, selector-arm 53, multiple point 50, wire 15, wire 21, windings r′ r′ of repeating-coil A′, condenser 48, back to ground 49.

The grounds indicated at 32 and 49 constitute in practice a metallic common return-circuit within the central station. When the conversation is ended, the hanging up of X's receiver returns his selector-arms to their starting-points by deënergizing relays H and J, and consequently magnet F, which up to this moment has been holding down the selector-arms. The return of these arms opens the testing-circuits through relays L O′ and the winding s′ of magnet F′. Switch N disconnects battery B from X's line and restores alternating current, ready for the next call. When Y hangs up his receiver, his relays H′ and J′ become deënergized, thereby opening the local circuit from battery B^3, which deënergizes magnet F′, switch N′ resuming its normal position wherein alternating current is impressed upon the line in the place of direct current. Normal conditions have now been restored at all points in the system in so far as X and Y are concerned. Should Y chance to hang up before X hangs up, magnet F′ is kept from releasing its armature by means of the winding s′ which is still energized by the testing-circuit from X, said winding sufficing to hold up said armature after it has once been drawn against the poles of the magnet.

The switch N′ is under these conditions not restored, and as generator-current is not impressed upon the line until switch N′ is restored Y's signal-bell will not be rung needlessly. When X hangs up, the winding s′ of magnet F′ is deënergized, switch N′ restored, and normal conditions re-established. Should any subscriber attempt to connect with a subscriber whose line is already in use, means are provided for keeping out the interloper, at the same time automatically notifying him that the desired line is busy. A line may be busy from two causes—the subscriber may have originated a call or he may have received a call. In either case the present system protects the engaged subscriber's line from intrusion. This is accomplished by establishing a relay L in the testing or preliminary circuit, which keeps each subscriber's talking-circuit normally disconnected from his own selector-arms. This testing-relay must be actuated before the calling subscriber can talk, and said relay will not be actuated if the desired line is already in use. The testing-relay is rendered inoperative in two ways —first, by an interrupted return-circuit to battery (such is the case when the multiple wire of a busy calling subscriber is tested); second, by the establishment of

Digitized by Google

this relay in the testing-circuit in such relation to the multiple wire of a busy called subscriber that no current flows through its winding.

Let us consider the first case and assume that X wishes to call Y, who has already called Z, a third subscriber. The operation proceeds as before up to the point when X's selector-arm is brought in contact with Y's multiple wire; but X's testing-circuit back to the grounded terminal of the battery is now incomplete, the circuit having been broken by commutator P, which operated at the first movement of Y's selector in calling Z. Hence X's testing-relay L will not be actuated, and therefore although X's selector-arm is actually in contact with Y's multiple wire X cannot interfere with Y's conversation, nor can he hear it, because his talking-circuit is not in connection with his selector-arm, as already stated. X hears only the sound of the busy-tone signal which proceeds from the apparatus T along wire 28 through commutator R (which closed this portion of the busy-tone circuit at the first movement of X's selector), wire 29, contact 25, condenser 30, windings *r r* of repeating-coil A, condenser 31 to ground 32. The busy-tone vibrations are taken up by the other windings of repeating-coil A and are heard in X's receiver. Taking up the second case, let us assume that X is calling Y, who has already been called by Z.

In this case X's testing-relay L is rendered inoperative not by the opening of Y's ground (for Y being the called party has not rotated his own selector and commutator P′), but by the fact that Y's multiple wire is at the same potential —*i. e.*, twelve volts—as X's selector-arm, which at that moment is in connection with a twelve-volt lead from the middle or twelve-volt point of the twenty-four-volt battery B^4. This may be explained as follows: Y's multiple wire is at a potential of twelve volts, because it is midway between the terminals of the twenty-four-volt battery, with an equal amount of resistance on each side of the multiple-wire. The elements which cause this balance will be comprehended if we assume for the moment that X has called and is talking with Y and consult Fig. 1. The subsidiary circuit, which places Y's multiple wire at twelve-volts potential, may be traced from terminal 33 of twenty-four-volt battery B^4 through eighty-ohm retardation-coil *a*, armature 108, contact 23 of relay L, eighty-three-ohm winding of relay L, wire 18, selector-arms 55 and 53 to the multiple wire of Y at 50, making up to this point a total resistance of one hundred and sixty-three ohms.

On the other side of multiple point 50 the circuit continues via wire 15, wire 21, forty-ohm winding *r′ r′* of repeating coil A′, forty-ohm winding *s′* of magnet F′, and eighty-three-ohm winding of relay O′ back to the grounded terminal of battery B^4, making again a resistance of one hundred and sixty-three ohms. We thus find that the multiple point 50 is in a circuit from a twenty-four volt battery, with equal resistances on each side, and is therefore at a potential of twelve volts. Returning to the process of X calling Y, already called by Z, when X's selector-arm touches Y's multiple both are at the same potential, as just described, and as in accordance with a well-known law no current will flow between two points at the same potential testing-relay L will not be actuated, and X upon listening will hear only the busy tone-signal, as before.

It has already appeared that subscribers' numbers below one hundred are disregarded in the selecting and connecting apparatus, as described in detail. This is because all connections when made include in the established circuit the hundreds selector-arm as well as the tens and units selector-arm, and a subscriber would be quite likely to forget to set the pointer of his dial at "0" to bring in the "0" hundred selector-arm after having set it at the desired number below one hundred. For a somewhat similar reason the "0" points are omitted on the calling-dial at the subscribers' stations and in the multiple-contact rows at the central station. It is obvious, however, that these omissions for many features of the system are not essential and that apparatus within many features of the invention could be readily constructed which would involve the use of but a single row of multiple contacts for each subscriber at the central station and but one magnet for imparting a rotary move-

Digitized by Google

ment to the single selector-arm used in connection with such single row. In this construction the connecting-strip concentric to the semi-circular row of multiple contracts would be in normal electric connection with the calling-subscriber's testing apparatus instead of being adapted to be connected thereto through a hundreds contact, a hundreds selector-arm, and the concentric connecting-strip in juxtaposition to the hundreds row of contacts. An original plant thus constructed, however, is not adapted to be so readily increased with the growth of the exchanges as where it contains at the beginning provision for dividing the calling-number of each subscriber into two parts.

It has been stated above that the shaft 95, carrying the pointer at the substation, is rotated in precisely the same manner as shafts U and V at the central station carrying selector-arms. It is to be remembered, however, that while the operation at the central station is wholly automatic the operation at the subscriber's station is in part manual. Further, it is the forword movement of the substation device that is effected by the hand of the subscriber, while it is the forward movement of the central station that is effected by altering current. On the other hand, the return movement of the substation device is effected by alternating current, and the return movement of the central-station device is effected by a spring. Thus of these four movements necessary for the two devices the two movements in synchronism resulting from the use of the same alternating current are the return movement of the pointer and the forward movement of the selector-arm. This, in view of the use of alternating current as a means of propulsion, is an important feature of the invention, since it allows the automatic and necessarily simultaneous cessation of the two movements. Any slight deviation from synchronism in the movements of the selector-arm and pointer finds a remedy in the use of several waves of alternating current to move the selector-arm from one contact-point to the next and use of self-centering contact-springs connected by the selector-arm.

Another important feature of the invention is the use of the mechanical clutch, as above described, for transmitting power from the propelling mechanism to the shafts carrying the selector-arms at the central station. The use of the clutch permits the disengagement of the shaft from the propelling mechanism without interference with the propelling mechanism.

Albert M. Bullard of Somerville, and Malcolm C. Rorty of Dedham, Mass. No. 709,740, Sept. 23, 1902. Automatic Telephone Exchange System and Apparatus.

This also is an improvement upon the joint invention mentioned in Mr. Bullard's patent, Mr. Bullard and Mr. Rorty have assigned to the Bell Company. Like the Bullard patent, this joint patent contains numerous drawings and quite a number of claims. Only the diagrams are reproduced. As described in the patent, the circuits and operation are as follows:

In the resting state of the circuit all of the paths through the substation X between the main conductors 2 3 are conductively discontinuous. The branch through the bell B is, however, made receptive to ringing-currents by the interposed condenser *k*. This in every case (as indicated in Fig. 2, which shows the arrangement of two substations) is in an earth branch from conductor 2. The said branch leads from point 46 on the said main conductor 2, through the closed resting contracts of the interrupter D and the two keys K^2 K, to the condenser *k*, and from thence through the circuit-breaker *o* of switch O by conductors 47 and 48 and by way of the point 49 to the bell-magnet B and ground connection 50. To aid in maintaining the circuit balance against inductive disturbance, there is a similar but dummy branch from main conductor 3 at 51, passing through conductors 52 and 53, the circuit-breaker o^2, condenser k^2, and impedance-coil i^3 to earth. Passing toward the central station C the normal path of the substation-circuit may be traced by conductor 2 to the resting contact 23 22 of commutator H and from thence to the other main conductor 3, through conductor 54 and the bridge 8, extending between points 6 and 7 on the main conductors, respectively, and including the source of current S

and the impedance-coils I *i*, and then through the two exciting-coils w^3 w^2 in series of relay R, conductor 55, and the closed resting contact 20 21 of key H. The said source is grounded at its pole nearest to main conductor 2. By following the extension 56 of conductor 2 from the bridge-point 6 it will be seen that it passes to the multiple fixed terminals or points *u* of the circuit, one for the movable terminal of each other circuit. That terminal *f*, representing conductor 2 of the circuit L, in like manner unites with said conductor 2 by way of conductor 62, armature z^4 of relay *r*, front contact-point z^6 and conductor 63, conductor 57, contacts 27 25 of commutator P, conductor 71, condenser h^2, conductor 55, and contacts 20 and *y* of the key H. Thus the said movable terminals or selectors are normally detached from their circuit-conductors and only become at-

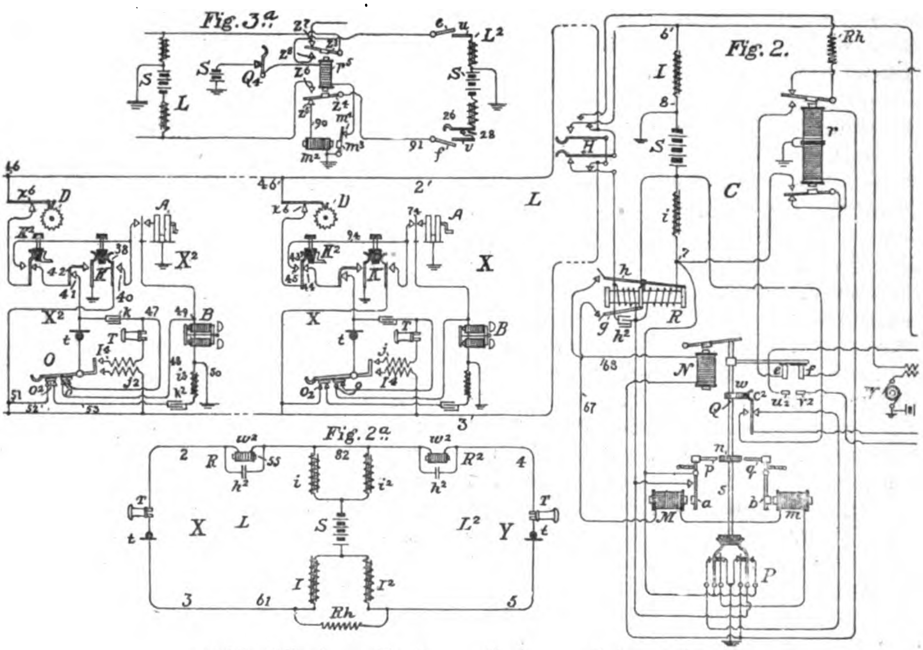

709,740—Telephone Exchange System and Apparatus.

tached thereto when after selection has been made and the said movable terminals have been brought into contact with the fixed terminals *u v* of the wanted line, and when also after the commutator H has been operated the relay *r* becomes excited and attracts its armatures z^3 z^4. The resting-contact z^5 of armature z^4 is united by conductor 66 through coil z^2 of relay *r* to ground, and the resting-contact z^7 of armature z^3 connects by conductors 64 and 65 with the apparatus for producing the "busy" tone-signal currents.

which is associated with the selector-arm E^2 of substation-circuit L^2 is shown in place; but the others are merely indicated to show their circuit relation.

In like manner the fixed terminals *v* of the other side of the circuit are arranged to connect with an extension of main conductor 3, passing from point 7 of the bridge by conductor 57, the normally separated contacts 26 28, conductor 58, commutator-contacts c^3 c^2, and conductor 59. The movable terminal *e* of of the circuit connects with conductor 3 at contact 24 of key or commutator H after the said key has been operated by way of conductor 60, front and armature contacts z^8 and z^3 of relay *r*, resistance R*h*, conductor 61, and the contacts 24 22, and y^2 of said key, and the movable

Separable contacts a^2 a^3, associated with the armature-lever and its forward-limit stop of selecting-magnet M, constitute a short circuit around the exciting-helix w^3 of relay R, and when closed

Digitized by Google

permit the sluggish armature *h* of said relay to swing over to the forward pole thereof.

In the commutator P, operated by the vertically-moving selector-shaft *s*, the contact made between members 25 and 27 thereof supplements the foregoing short circuit and when the shaft descends maintains the same, even though the armature of the selecting-magnet shall have been retracted. The contact made under like conditions between members 26 and 28 of said commutator constitutes a circuit-closer to connect the fixed terminals *v* of a line with the source of current, thus raising the potential of said terminals to furnish a test-current for use in protecting a busy line from the intrusion of a third circuit. The normal contact between members 30 and 31 of the commutator is directly in the circuit 67 of the selecting and retaining pawl magnets, which circuit extends from the battery S through the frame and armature *g* of relay R, the helices of said magnets M and *m*, to and through said contact to ground. Its purpose is to open the said circuit on the operation of the connecting-magnet N and the consequent depression of shaft *s*, and the contact normally established between members 29 and 32 of commutator P is in an earth branch of the connecting-magnet circuit 68, extending from the grounded battery S and through the frame and armature *h* of relay R by the same route as local circuit 67 and continuing through the exciting-coil of connecting magnet N and the upper winding *z* or exciting-coil of the differential relay *r*, the said earth branch and its contact members 29 and 32 being placed intermediately between the magnet N and relay *r* to shunt the latter during the first part of the operation of said magnet, thus making the current available for said magnet stronger than it could otherwise be. When, however, the said magnet has operated and the shaft *s* has been depressed, the contact between 29 and 32 is broken and current is admitted to the relay-coil *z* to excite the said relay.

The commutator Q, which has resting contact between its members c^2 and c^3, operates as soon as the selector-arm to which it belongs is moved from zero, and breaking the said resting contact establishes a new one between c^2 and c^4, by means of which a substitute and more direct path for test-current from the source S to the fixed terminal *v* of a calling-line is provided by way of conductor 89, which previously was open at point c^4, the first path through contacts 26 and 28 of commutator P being open during selection.

It will be understood from what has been stated that normally every exchange-circuit is conductively continuous through the battery S and both coils of its own relay R at the central station C and conductively discontinuous at the substation, and that consequently by closing it at the substation the relay R may be operated.

In the operation of this system let us assume that a subscriber—for example, No. 20-3 of substation X on circuit L—desires to communicate with substation Y of circuit L^2, whose number, we will say, is 37-2. He first removes his receiver T from the switch-hook O and listens to assure himself that his own line is not already in use by some other station. This action closes the circuit of the source S at the substation and current flows through both windings of relay R and through the telephone apparatus at the substation. The preliminary route of this circuit between the two poles of the source is as follows: Impedance-coil *i*, the relay-coils w^3 and w^2, conductor 55, commutator H, main conductor 3, point 67, the induction-coil secondary j^2, switch O, transmitter *t*, the two substation-keys, the resting contacts of the periodic interrupter D, point 46, main conductor 2, transposing-commutator H, conductor 54, point 6, and impedance-coil I. The current now flowing is steady and sustained and is consequently responded to by both armatures of relay R. At this moment, however, though the selecting and connecting magnets M and N are both operated by the closure of their respective circuits 67 and 68 and though the shaft *s* is depressed and operates the commutators H and P, these movements are with one exception incidental and do not involve the exercise of any useful function. The exception is that by the depression of shaft *s* and the consequent operation of the commutator P the normally separated switch members 26 28

Digitized by Google

are brought into contact, thereby connecting the undergrounded pole of battery S by way of point 7 on battery-bridge 8, conductor 57, contacts 26 28, conductor 58, resting-contacts c^3 c^2 of commutator Q, and conductor 59 to the multiple fixed terminals *v* of the main circuit, whereby the potential of said terminals is raised to prevent intrusion in the initial stage of the operation by another calling subscriber, as will presently be explained. Moreover, though the selecting-magnet M will in this initial closure actuate its ber, and then releases it. The return of the arm and the revolution of the gear-impelled star-wheel open and close the main circuit in rapid succession a number of times corresponding to the number of the line wanted, and each time the circuit is closed the lower or quick-acting armature *g* of relay R responds and is attracted forward, falling away again with each break. The local circuit 67 of the selecting-magnet is by the said armature movement correspondingly made and broken, and the said selecting-mag-

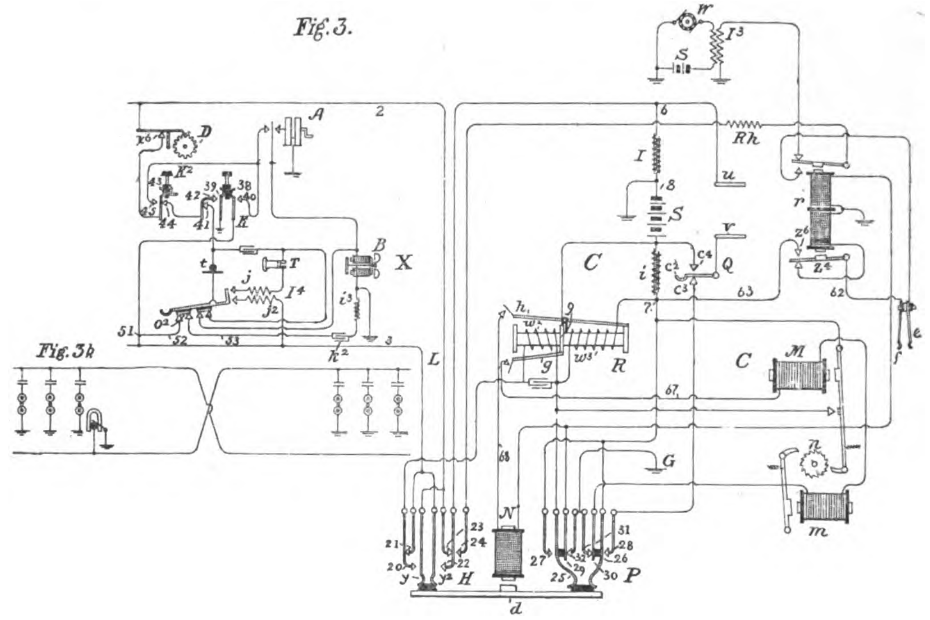

709,740—Telephone Exchange System and Apparatus.

pawl and possibly move its selector-arm one space over the switch-plate it will not thus be thrown out of its proper position to begin the selecting operation, for the operation of magnet N and the depression of shaft *s* follow so promptly that the local circuit of magnets M and *m* is at once opened at the contacts 30 31, and these magnets then lose control of the ratchet-wheel *n*, whereupon the shaft *s* and selector-arm E, if they have been moved, swing back to zero.

Finding the circuit disengaged, subscriber No. 20, at X revolves the arm J of his current-interrupter D to No. 37, representing the desired line, the pin e^2 having been placed in the hole adjacent on the face of the apparatus to such num- net M is intermittently excited, the attractions and retractions of its armature *a* copying those of armature *g* and actuating the selector mechanism, hereinbefore described, to move the selector-arm E around the switch-plate V until the movable terminals *e f* of the circuit are directly opposite and above the fixed terminal contact-strips *u v* of the line wanted—No. 37. The local circuit 67, controlled by the light armature *g* of relay R, after passing through the winding of the selecting-magnet continues through that of the retaining-pawl magnet *m* and through the normally united contacts 30 31 to the ground or return connection.

The said retaining-magnet (which, as previously explained, is sluggish in its

Digitized by Google

discharge and reaction) attracts its armature b with the first impulse of the periodic series produced by the interrupter, and thus brings the retaining-pawl q into engagement with the actuating ratchet-wheel to secure the same and the selector mechanism from falling back during the intermissions of current when the selecting-magnet armature is attracted for a further stroke; but the said armature b, having once moved, is not retracted by said intermissions, but remains attracted with its pawl in engagement until the connection is completed. In this way the retaining-pawl is brought into engagement with the ratchet-wheel and caused to remain there during the work of selection, acting as a clutch to hold each step advanced by the selector shaft and arm. The heavier armature h of relay R, which was attracted by the steady current when the circuit was first closed, falls back to its normal position, with its rear end close to the rear magnet-pole, as soon as the periodic interruptions of the circuit begin and retains its retracted position as long as the said interruptions continue, the cumulative lag of the armatures g and a, the current in winding w^3 of said relay, and the slight overbalancing of the armature h co-operating to that end, for although the armature a has an associated circuit-closing device comprising the armature-contact a^2 and fixed contact a^3 and tending to short-circuit the said winding w^3 through the conductors 57, 69, 70, and 71 with each pulsation of current the frequency of interruption in the main circuit, and consequently of separation of the points a^2 a^3, is so high that the resistance of the shunt around the winding w^3 is too great to drain much of the current therefrom.

When, however, the substation-interrupter has returned to zero position and selection of the desired line is completed, the current again becomes steady, and the lighter armature g of relay R is steadily attracted and held in its forward position, thus closing the local circuit 67, and thereby causing the selecting-magnet M in turn to steadily attract and hold its armature. The short circuit through a^2 a^3 around the winding w^3 is then effectively established, the exciting-current through the said winding is drained therefrom, and the heavier and slow-acting armature h, no longer held back by its rear pole, is permitted to yield to the influence of the front pole, excited by coil w^2, and swings over to a position wherein its front end is brought close to the front pole of the magnet. The circuit 68 of the connecting-magnet N is closed by the forward attraction of armature h, and a current flows from the ungrounded terminal of the battery S to the frame of relay R and contacts of armature h and through the local conductor 68 and connecting-magnet N. returning to the other pole of the battery at this stage of the operation through the contact 29 32 of commutator P. The connecting-magnet is thereby actuated and operates to depress the shaft s and selector-arm E, and the movable terminals e f of the circuit, which by the selecting process have been moved to a point immediately above the associated fixed terminals u v of the line wanted, are thus pressed down upon and grasp the said fixed terminal strips, respectively, establishing contact therewith.

Moreover, the depression of the shaft s by the connecting-magnet N also operates the keys or commutators H and P. The operation of the key P dissolves the contact normally existing between its members 30 31 and 29 32 and establishes new ones between 26 and 28 and between 25 and 27. The separation of 30 and 31 opens the circuit containing the selecting and retaining magnets and permits these magnets to release their armatures, so that the actuating-pawl p and retaining-pawl q are both disengaged from the ratchet-wheel n. The selector-arm E does not, however, now under the influence of the recovery-spring n^6, return to its starting-point or zero position, being held in place by the movable contact-terminals e f, which clasp the fixed terminal strips u v of the wanted line. The separation of 29 and 32 removes the intermediate ground connection or cut-off from the local circuit of the connecting-magnet N. The object of this initial ground connection through contact-points 29 32 was to reduce the resistance of this circuit by short-circuiting the upper winding or exciting-coil z of the differential relay r, thus producing maximum current in the local circuit 68 for the operation of magnet N, while the latter is performing the

Digitized by Google

work of forcing the shaft s down; but the short circuit being now removed the said relay-winding z is introduced into the circuit 68 in series with the connecting-magnet N.

The contact established between members 25 and 27 of commutator P closes a new short circuit around winding w^3 of relay R that through the circuit-closing points a^2 a^3 being opened by the disexcitement of magnet M pursuant to the opening of its circuit at the commutator-contacts 30 31, and since this new short circuit remains intact as long as the communication between the calling and called line continues it is evident that the winding w^3 of the relay R is excluded from the talking-circuit during conversation, and the contact established between members 26 and 28 of commutator P, which, on original depression of the shaft s supplied a testing potential through contacts c^2 c^3 of commutator Q to the fixed terminals v of the calling-line, is of no consequence at this point of the operation, for the reason that the movable member c^2 of said commutator Q was detached from its contact with c^3 on the first rotary movement of shaft s, the said movable member being suffered to make contact with the back contact c^4, and thus to form a circuit-closer acting to establish a testing potential in connection with fixed terminals v, but under different conditions, whereby the line is guarded from intrusion during the time required by the selecting process and subsequent thereto. We have seen that the connection between the movable terminals e f of the calling-circuit and the fixed terminals u v of the wanted circuit was effected immediately upon the depression of shaft s by the connecting-magnet N. This operation, however, does not establish communication between the said two circuits, for the reason that the said movable terminals are normally detached from the main circuit they represent. Tracing back from the said terminals, it will be found that neither of them leads directly to its own circuit-conductor and that to attach them to their respective conductors it is essential that the relay r shall attract its armatures.

We have also seen that the depression of shaft s was followed by the introduction of winding z of relay r into circuit 68, so that the current flowing through such circuit would also flow through said winding. If a substantially equal opposing current should now flow through the other coil z^2 of the relay, the said relay will remain inoperative and the attachment of the movable terminals to their circuit would not be effected, and this is, in fact, what occurs if the line wanted be already busy; but we have assumed the said line to be disengaged and that a current flows through coil z only. The circuit of said coil beginning at the battery S is traceable through conductor 67, the metal frame of relay R, armature h, connecting-magnet N, conductor 68, and through winding z of relay r to ground. The relay r is excited and attracts its armatures z^3 z^4 to their forward positions, establishing connection between the main conductors 3 and 2 and the movable terminals e and f, respectively. At this juncture the main circuit L of subscriber No. 20 is connected by its two movable terminals with the corresponding pair of fixed terminals of the main circuit L^2 of subscriber No. 37; but the talking-circuit between the two substations X and Y remains uncompleted until the said wanted subscriber No. 37 lifts his receiver from his switch-hook. There is, however, a single-conductor earth-return circuit between the said stations over which call-signals may be transmitted.

To ring or send a call from station X to station Y after the selecting and connecting operations described, the subscriber at X actuates his call-generator A, at the same time pressing the key K. The generator may be fitted with the usual automatic controlling device to close its circuit and to connect itself with the line by uniting the points 73 75, the connection in this instance being made through the intermediate piece 74, a branch 77 being led therefrom to earth through the home bell, so that a ring may be produced at the transmitting as well as at the receiving station. The circuit through which the ringing-currents developed by the generator reach the bell at Y is particularly shown by Fig. 3b and is as follows: from the grounded call-generator A through conductor 76, contacts 40 38 of key K, conductor 78, main conductor 3, contacts y^2, 22, and 24 of commutator H, (which, it is to be remembered, has

Digitized by Google

F. E. N. R.

Guess what this means and you get one!

UTICA DROP FORGE & TOOL CO. Manufacturers of Nippers and Plyers.

THE SMITH & HEMENWAY CORP. Manufacturers of Cutlery and Hardware Specialties.

Ask your dealer for these goods.

296 Broadway - - - NEW YORK CITY

AN ERICSSON ?

YES, AND IT IS "STANDARD OF THE WORLD"

Switchboards of all sizes; telephones for all uses and full exchange equipment. We help new companies to start right and old exchanges to improve.
We can interest you. Write for particulars.

ERICSSON TELEPHONE CO., 296 Broadway, NEW YORK CITY.

RELAY SHELLS

We are supplying them in large quantities for progressive manufacturers. Companies installing central systems, covering thousands of subscribers, use them. They are drawn from stock make in our own Steel Mill.

We also make

MAGNET CORES

of a superior quality of Norway Iron thoroughly annealed.

Inquiries solicited.

Samples of work to responsible concerns.

FEDERAL MFG. CO.
THOMPSON FACTORY,
CHICAGO, ILL.

MENOMINEE

Electric.....

Manufacturing Company

MENOMINEE, MICH.

Manufacturer of

High Grade Magneto Bells for Series and Bridged Work.

A careful study of the requirements of the independent telephone field, together with long experience in the manufacture of electrical apparatus, enables us to offer a very superior instrument containing all the qualities that combine to effect the highest degree of efficiency at prices commensurate with the extraordinary quality of our produce

OUR MOTTO IS
**The Best Equipment.
To the Best People.
At the Best Price.
Gives the Best Results.**

FAN MOTORS - - FAN MOTORS

Unequaled for Telephone Booths, Offices, Factories and Residences.

Digitized by Google

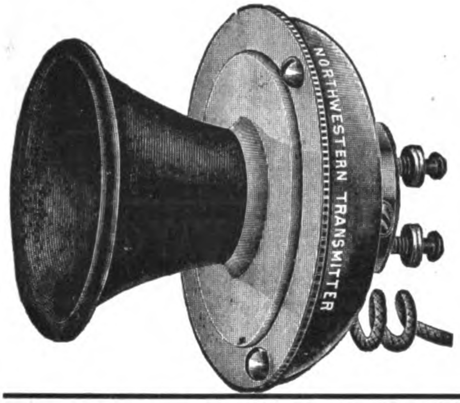

NORTHWESTERN TELEPHONE MANUFACTURING CO.

We make Telephones for the Wholesale and Supply Trade

ANY STYLE, AND PARTS FOR ALL TELEPHONES.
WORKMANSHIP GUARANTEED.
SEND FOR PRICES.

Address 191 to 193 S. Canal St., CHICAGO.

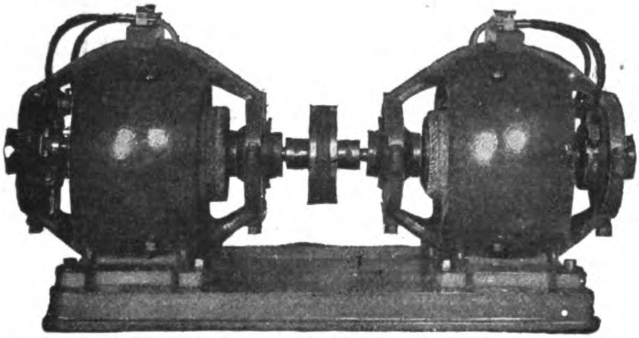

TWIN CHARGING MOTOR-GENERATOR1

TELEPHONE POWER APPARATUS OF EVERY DESCRIPTION

Our Line will fill all your wants

Charging Outfits
Ringing Generators
Special Telephone Power Apparatus
Send for Bulletin No. 147

ROTH BROS. & CO.

88-92 W. Jackson St., CHICAGO, ILL.

The American Electric and Automobile Patents Monthly

INCLUDING ALL PATENTS FOR TELEPHONES

The publication to contain each and every sheet and figure of the drawings of the telephone patents, the claims in full, a short description of the invention, also a complete list of the references cited while the applications were pending, *interferences, parties thereto and the decisions, also reissues, designs and trademarks pertaining thereto.* . . . .

SUBSCRIPTION PRICES

Including the *Telephone Magazine* Published Monthly

United States and Canada . . $5.00 per annum, in advance
Foreign Countries . . . . . 7.50 per annum, in advance

ADDRESS

Telephone Magazine Medinah Temple Chicago, U. S. A.

Digitized by Google

FOR SALE.

We have one latest type Stromberg-Carlson Magneto Switchboards, 100-Drop Cabinet with 50 Series and 20 Toll Line Drop installed which we wish to sell to make room for a larger board. Cost about $300 with attachments. Will sell at a bargain.

CLINTON HOME TELEPHONE CO.

M. S. POWELL, Manager.
CLINTON, N. Y.

FOR SALE!

225 Second Hand GENERATORS

For further particulars inquire of
J. C. MARSH, - - Marshfield, Wis.

Bound Volumes

Vol. XVII. January-June 1901
Vol. XVIII. July-December 1901

OF THE

Telephone Magazine

NOW READY

Substantially bound in Muslin with Gilt Title, will be sent, postpaid, for $1.50 to any address.

Telephone Magazine

Medinah Temple, Chicago, U. S. A.

A LIBRARY OF TELEPHONE LITERATURE

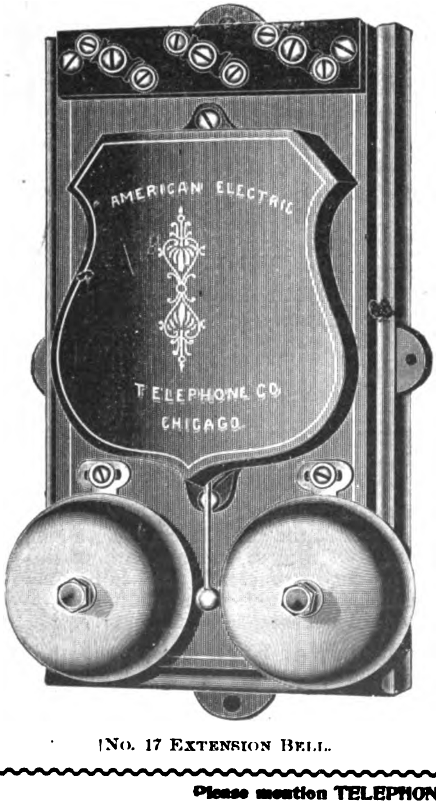

No. 17 Extension Bell.

. . . The

No. 17 Extension Bell

With Condenser

FOR DESK SETS AND WALL TELEPHONES

ADAPTED FOR CENTRAL ENERGY COMMON BATTERY OR MAGNETIC SYSTEMS

American Electric Telephone Co.

36-58 West Jackson Blvd.
CHICAGO, U. S. A.

Digitized by Google

THE
Plume & Atwood Mfg. Co.
199 Lake St., CHICAGO, U. S. A.

BRASS, COPPER
AND
GERMAN SILVER
IN
Sheet, Rods, Wire, Brazed and Seamless Tube

TELEPHONE AND KINDRED BOOKS.

THE INSPECTOR AND TROUBLE MAN. By A. E. Dobbs.
A complete volume on telephone faults and exchange construction. 110 pages, 67 illustrations $1.00

TELEPHONES; THEIR CONSTRUCTIONS AND FITTING. By F. C. Allsop.
A practical treatise on the fitting up and maintenance of telephones and the auxiliary apparatus. 208 illustrations and folding plates. Third edition, 12mo, cloth 1.25

PRACTICAL FEATURES OF TELEPHONE WORK. By A. E. Dobbs.
This volume is on telephone construction, and should be of great value to every telephone man. 135 pages, 65 illustrations .... .75

SMALL ACCUMULATORS. By Percival Marshall.
As storage batteries are being used in the telephone exchanges, all telephone men should be familiar with their construction and working. This volume will be found to be complete to every telephone student. 80 pages, 23 illustrations .... .50

THE GALVANOMETER AND ITS USES. By C. H. Haskins.
A manual for electricians and students. Fourth edition, revised. 12mo, morocco; illustrated 1.50

INDUCTION COILS. By G. E. Bonney.
A practical manual for amateur coilmakers. 101 illustrations, 12mo, cloth 1.00

ELECTRIC TELEPHONY. By E. J. Houston and A. E. Kennelly.
Elementary Electro-Technical Series. 16mo, cloth; illustrated 1.00

ELECTRIC INSTRUMENT MAKING FOR AMATEURS. By S. R. Bottone.
A practical handbook, with 48 illustrations. Fourth edition. Enlarged by a chapter on The Telephone. 12mo, cloth .... .50

TELEPHONE INSPECTOR'S HANDBOOK. By W. H. Hyde and J. H. McManman.
Telephone Troubles and How to Find Them. 64 pages. Many illustrations. The only book enabling telephone men to instantly overcome telephone troubles .... .25

THE TELEPHONE. By William J. Hopkins.
Outline of the development of Transmitters and Receivers. 12mo, cloth, New York: 1898, 1.00

THE MAGNETO HAND TELEPHONE. By Norman Hughes.
Its Construction, Fitting Up and Adaptability to Everyday Use. 12mo, cloth 1.00

TELEPHONE HAND BOOK. By Herbert Law Webb.
12mo, cloth. 133 illustrations. Chicago: 1900 .... 1.00

PRACTICAL ELECTRICS.
This volume could rightly be called an electric encyclopedia. It contains information on everything pertaining to electrical matters. 135 pages, 126 illustrations .... .75

SYSTEMATIC TREATISE ON ELECTRICAL MEASUREMENTS. By H. C. Parker.
Treats more particularly of methods used in laboratory, telegraph and cable testing. 120 pages, 100 illustrations, cloth 1.00

PRACTICAL TELEPHONY. By J. Bell and S. Wilson.
Adapted to Requirements of City and Guilds of London Institute. 8vo, limp cloth. London: 1898 .... 1.00

ELECTRICAL CATECHISM. By Geo. D. Shepardson, M. E.
An introductory treatise on electricity and its uses. 400 large octavo pages. 1516 illustrations. New York: 1901 .... 2.00

AMERICAN TELEPHONE PRACTICE. By Kempster B. Miller.
518 large octavo pages. 379 illustrations. This book treats of the subject in a simple and comprehensive manner from the practical standpoint, and almost entirely without the use of mathematics. All matters of principle and practice are clearly and fully considered, enabling the reader to obtain an understanding, not only of the rudiments of telephony, but also of the most intricate circuits of modern exchanges 3.00

WILL SEND ANY ELECTRICAL BOOK PUBLISHED ON RECEIPT OF PRICE, POST PREPAID.

ADDRESS

Telephone Magazine · MEDINAH TEMPLE, CHICAGO, U. S. A.

Digitized by Google

DIPLOME DE GRAND PRIX

Awarded to the Telephone Magazine at the Paris Exposition in 1900, it being one of the Nineteen American Journals and Magazines that made a collective exhibit.

Digitized by Google

FOR THE YEAR 1903

The

Telephone Magazine

Will fully maintain the high standard of excellence it so quickly attained in the Telephone field.

The Inspector and the Trouble Man will soon again discuss in an attractive and instructive manner the many subjects of Telephony in all its branches. :: The usual instalments of interesting and instructive, finely illustrated articles on

Exchanges and Apparatus, Switchboards, Distributing Boards, Cross-Connecting Boards, Line Construction, Signaling Devices Telephone Troubles and How To Find Them

and many other valuable features, will appear regularly and add to the ever-increasing fund of telephone literature. :: If you can afford to spend

EIGHT CENTS A MONTH FOR THE BEST TELEPHONE PAPER

send us a dollar bill, with a filled out subscription blank and the paper will reach you regularly until the end of the century.

Subscription:
One Year, United States and Canada, $1
One Year, foreign countries - - $1.50
Single Copies - - - - - - - 15c

Newsdealers Sell It
Sample Copy for Stamp

Address **Telephone Magazine Pub. Co.**
Medinah Temple :: Chicago, Ill., U. S. A.

Gordon Cells

Extensively Used by

Leading Telephone Companies and Manufacturers

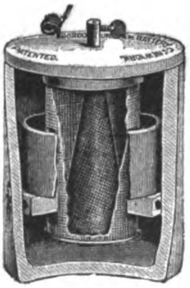

Guaranteed Long Life and Efficiency

Ask for Catalog and Discounts

Gordon Battery Co.

439-445 E. 144th Street NEW YORK

SWITCHBOARD CORDS
SILK CORDS

Any Style — For Any Purpose

PROMPT DELIVERIES

The McDermid Mfg. Co.

120 W. Jackson Boulevard, CHICAGO, U. S. A.

BINDERS

For preserving your Copies of

Telephone Magazine

Will be sent postpaid for

50 cents in stamps.

STRONG, SIMPLE, DURABLE.

Will hold six months' or a year's numbers.

SEND FOR ONE.

Telephone Magazine

Medinah Temple, Chicago, U. S. A.

Digitized by Google

SPECIFY THE "Chloride Accumulator" FOR TELEPHONE WORK.

THE ELECTRIC STORAGE BATTERY CO.

PHILADELPHIA

PHILADELPHIA Allegheny Ave. & 19th St. | NEW YORK 100 Broadway | BOSTON 60 State St. | CHICAGO Marquette Bldg | BALTIMORE Continental Trust Bldg.
ST. LOUIS Wainright Bldg | CLEVELAND New England Bldg. | SAN FRANCISCO Nevada Block | DETROIT Michigan Elect Co | HAVANA, CUBA G F. Greenwood, 34 Empedrado St.

SPEER CARBON COMPANY

Manufacturer of

CARBON BACKS AND SPECIALTIES FOR TELEPHONES—ALSO LIGHTNING ARRESTER CARBONS OF EVERY DESCRIPTION . . . . .

ST. MARYS, PA.

A POPULAR SCIENTIFIC WEEKLY JOURNAL

ELECTRICITY AND ELECTRICAL ENGINEERING

The Most Successful Medium for Advertising in the United Kingdom

WRITE FOR SAMPLE COPY AND ADVERTISING RATES

2 EXETER ST. STRAND LONDON, ENGLAND

ELECTRICAL ENGINEERING PUBLISHING CO., Marquette Building, Chicago, Ill.

Telephone Magazine 1902

MEDINAH BUILDING, CHICAGO.

Enclosed find $1.00, for which send The Telephone Magazine to the following address for one year, beginning .... and a copy of The Telephone Inspector's Hand-Book.

Name ....

SUBSCRIPTION:
$1.00 PER ANNUM
$1.50 FOREIGN COUNTRIES

.... Street

City .... State ....

Telephone Magazine 1902

MEDINAH BUILDING, CHICAGO.

Enclosed find $1.00 for which send The Telephone Magazine to the following address for one year, beginning .... and a copy of The Inspector and the Trouble Man.

Name ....

SUBSCRIPTION:
$1.00 PER ANNUM
$1.50 FOREIGN COUNTRIES

Street ....

City .... State ....

Digitized by Google

INDEX TO ADVERTISEMENTS.

	PAGE
American Electric and Automobile Patents—Publication	XII
American Telephone Journal	XVI
American Electric Telephone Co.—Transmitters	XX
American Electric Telephone Co.—Telephones	VIII
American Electric Telephone Co.—Selective Signal Telephones	IV
American Toll Telephone Co.—Pay Stations	XIII
Bulkley, Chas. C.—Patent Lawyer	X
Chicago Edison Co.—Electric Lighting Supplies	III
Central Manufacturing Co.—Announcement	X
Colt, Henry A	X
Conley Foil Company—Tin Foil	X
Cook, Frank B.—Protective Apparatus	IX
Electric Storage Battery Co.—Accumulators	XVII
Electricity (London)—Newspaper	XVII
Ericsson Telephone Co.—Microphones	XI
Federal Manufacturing Co.—Relay Shells	XI
For Sale	XIII
Gordon Battery Co.—Batteries	XVI
Keystone Electric Telephone Mfg. Co.—Telephones	VI
King, P. S. & Son	XVIII
Klein, Mathias & Son	X
Menominee Electric Mfg. Co.—Magnets	XI
McDermid Mfg. Co.—Magnet Wire	XVI
National Carbon Co.—Batteries	V
New York Insulated Wire Co.—Rubber-covered Wires and Cables	X
Northwestern Tel. Mfg. Co.—Telephones	XII
Nungesser Electric Battery Co. Batteries	VI
Okonite Co., Ltd	X
Plume & Atwood Mf . Co.—Brass, Copper and German Silver	XIV
Roth Bros. & Co.—Power Apparatus	XII
Royal Trust Company	X
Situations Wanted	
The Smith & Hemenway Corp.	XI
Special Offer	XVII
Standard Underground Cable Co.	X
Speer Carbon Co.—Carbon Specialties	XVII
Swedish-American Telephone Co.—Telephones	V
Telephone Magazine—Binders	XVI
Telephone Magazine—Bound Volumes	XIII
Telephone Magazine—Books	XIV
Telephone Magazine	XV-XVI
Utica Drop Forge & Tool Co	XI
Victor Telephone Works—Desk Stands	V
Weston Elec. Instrument Co.—Testing Instruments	III

NEW PUBLICATIONS FOR ENGINEERS

THE PRACTICAL PHYSICS OF THE MODERN STEAM BOILER.

By FREDERICK JOHN ROWAN, A. M. I. C. E., M. I. E. S., late Vice-Pres. Fed. Inst. M. E., late Mem. Coun. Soc. Chem. Ind. In this work the physical principles which demand consideration in the construction and working of Steam Boilers are passed in review, and the result is to give a new standpoint from which many of the questions connected with steam generation can be considered. This work deals with the Boiler from the point of view of a Heat-Engine, and, as the title indicates, is occupied with the Physics of the Steam Boiler. It will thus be seen that it proceeds on the lines on which alone improvement in steam generation can be hoped for. Price £1 1s, net. Demy 8vo. Over 400 pp., with numerous illustrations.

HIGH-SPEED STEAM ENGINES.

A Guide to English and Foreign Practice. By W. NORRIS, M. I. Mech. E., &c., and BEN H. MORGAN. With reproductions of over 156 photographs and drawings, and numerous tests. Second Edition. Demy 8vo, cloth. 10s 6d, net.

"We can cordially recommend this book to any one who wants to know all about high-speed engines."—*Electricity*

PUMPS: THEIR CONSTRUCTION AND MANAGEMENT.

Graphically illustrating the different classes of Pumps, pointing out the advantages and disadvantages of each class, and giving hints as to management. By PHILIP R. BJORLING. Cloth. 3s 6d, net.

"Mr. Philip R. Bjorling is one of the greatest authorities on Pumps."

MODERN METHODS OF SAVING LABOR IN GASWORKS.

A profusely illustrated work, showing the latest and best means employed for economically manipulating and managing Gasworks' material. By C. E. BRACKENBURY, A. M. Inst., C. E. Cloth. 3s 6d, net.

"A most valuable monograph on the subject."—*Scientific American*,

GLASGOW INTERNATIONAL EXHIBITION, 1901—AN ENGINEERING RECORD.

The only complete technical work dealing with the engineering sections. Graphically illustrated with photographs and drawings, and contains several colored plates Cloth. 5s, net,

"I congratulate you on the careful manner in which you have compiled so elaborate and exhaustive a book and one so extremely interesting."—*Mr. Thomas Young, the Engineer to the Exhibition.*

TRANSPORT BY AERIAL ROPEWAYS.

A complete treatise on the leading systems of ropeways. Fully illustrated and described by the designs of each system. Second edition. Paper. Price, 1s; post free, 1s 4d, net.

"An elaborate production describing all the important aerial systems."—*Mining World.*

London: P. S. KING & SON, 2 and 4 Great Smith Street, Westminster

Digitized by Google

been operated to transpose the relation of the main conductors 2 and 3 with their continuations 55 and 61 at the central station,) conductor 61, resistance R*h*, armature z^3, and front stop z^8 of differential relay *r*, conductor 60, movable terminal *e* of selector-arm E, fixed terminal *u* of substation-circuit L^2, conductor 79, contacts 22 23 of commutator H^2, (which has not been operated to transpose its several conductors,) main conductor 4 of circuit L^2, and at the substation Y from said conductor at 46 through the interrupter D, the resting-contacts 43 44 and 42 41 of the keys K^2 and K, respectively, and the condenser *k* to the bell B and ground. These appliances and connections at station Y are not shown; but the arrangement is exactly the same as at station X. At the same time a second ground return-circuit is closed by the ringing-key K through the forward exciting-coil w^2 of relay R, maintaining the attraction, through the intermediation of connecting-magnet N, maintaining the depression of shaft *s* and the engagement of the selector-springs *e f* with the selected multiple contacts *u v*. This circuit leading from the ground connection 80 of said key continues by way of contact-points 39 42, the resting-contacts of key K^2, conductor 81, resting-contacts x^6 of interrupter D, main conductor 2, closed contacts *y* 20 of commutator H, conductor 55, winding w^2 of relay R, the shunt-circuit 71 57 of the winding w^3 of said relay, point 7 of battery-bridge 8, and through the impedance-coil *i* and battery S to ground. This effectively prevents any undesired motion or trembling of the selector-arm while the generator at substation X is being operated and also frees the other main conductor 3 and its continuation 61 from the battery-current.

The commutator H of line L has its two principal contact-springs *y* and y^2 always electrically united to the main conductors 2 and 3, respectively, of said line. Conductor 2, however, normally connects through the other points or springs 23 and 22 with the multiple fixed terminals *u* of its own main circuit and with the grounded pole of the battery S, while conductor 3 in like manner connects through points or springs 21 and 20 with the multiple fixed terminals *v* of its own circuit and with the other pole of battery S, although said connection is normally broken at the contacts 26 and 28 of commutator P. When the commutator H is operated, the contacts 20 21 and 22 23 are disestablished and new ones are formed of spring *y*, representing main conductor 2 with point 20, and of spring y^2, representing conductor 3 with points 22 and 24. This can only occur when the connecting-magnet N of the line in question is operated and attracts its armature *d*, one of the branches of the forked rearward extension of the lever d^2 then acting to push farther apart the springs *y* y^2, and thus produce the above described changes. The effect of this operation is that the main conductor 2 of circuit L instead of being switched to the corresponding conductor 4 of circuit L^2 will be connected to conductor 5 and that conductor 3 of circuit L will be united to conductor 4 of circuit L^2. Now the bells B at the two substations X X^2 of line L are both, Fig. 2, connected with condensers in earth branches of main conductor 2; but the call-generators A at the same substations are in normally open earth branches, which may be connected with either main conductor.

Moreover, such also is the case for all of the main circuits of the system L^2, for example, having its substation-bells similarly connected to the particular main conductor 4, which in that circuit corresponds to the said conductor 2 of circuit L, while in each case by manipulating the key K the generator will be connected with the other main conductor. It follows that when pursuant to the establishment of connection between any two lines L and L^2 the commutator H of the connection-actuating line is operated the conductor 3 of the said line with which the call-generator A at substation X is associated by key K is united to conductor 4 of the wanted line with which the call-bells of the said wanted line are associated. Thus by the transposition of conductors effectuated by commutator H the subscriber is enabled to ring the bells of the wanted line without ringing any of the bells at other stations of his own line. A suitable code of signals is, of course, to be employed, and though all stations of the wanted circuit hear the ringing each will answer only to its own code-signal. When subscriber No. 37 at Y

Digitized by Google

answers by removing his receiver from the hook, his main circuit is closed and his relay R^2 becomes active, causing the connecting-magnet of that line also to depress its selector-shaft *s* and to operate its commutators H^2 P^2. No selection having previously been made, the movable terminal spring of line L^2 do not engage any fixed terminals of any line.

Therefore the connecting-magnet of a called line acts merely as a means of actuating the circuit-changers H^2 P^2, the former incidentally transposing the line conductors and the latter making the several changes of the circuits, which, in reference to circuit L, have already been described, only one of which, however, is of importance—namely, the short-circuiting of winding w^3 of relay R^2, that it may not be an impedance in the talking-circuit. Since the operation of calling was previously performed, the incidental transposition effected by H^2 is without significance. The complete talking-circuit between X and Y is thus fully established, and its character and arrangement are well indicated by the diagram Fig. 2*a*, wherein the battery S is shown as being bridged at the junction of the two component circuits L L^2 to supply current through the impedance-coils I *i* I^2 i^2 to each independently for a transmitter-supply, while the voice-currents developed by each transmitter pass over the main conductor straight to the distant receivers, on one side through the non-inductive resistance R*h* and on the other through the link conductor 82. The relay coils w^3 being short-circuited while the circuits are connected for talking are not shown and the relay-coils w^2 are shunted by the condensers h^2, through which the voice-currents easily pass.

More in detail, the talking-circuit may be thus traced: from secondary winding j^2 of transmitter induction-coil I^4 at station X of circuit L and passing through branch conductor 83, main conductor 3 to spring y^2 and contacts 22 24 of commutator H, conductor 61, resistance R*h*, armature z^3 of relay *r*, front stop z^8 thereof, conductor 60, movable terminal or selector spring *e*, fixed multiple contact *u* of line L^2, conductor 79, contacts 22 y^2 of commutator H^2 of line L^2, and main conductor 5 of that circuit to substation Y, and at such station through the secondary of the transmitter induction coil, the switch-hook O, the transmitter, the keys K K^2, and the interrupter, thence returning by way of main conductor 4, contacts *y* 20 of commutator H^2, conductor 84, the winding w^2 of relay R^2 and its shunting-condenser h^2, conductor 85, contacts 25 27 and 26 28 of commutator P^2, conductor 86, resting-contacts c^8 c^2 of the test-current commutator Q^2, conductor 87, fixed terminal *v* of line L^2, movable terminal spring *f* of line L, conductor 62, armature z^4, and front contact z^6 of relay *r*, conductor 63, shunt-conductors 57 and 71, winding w^2 of relay R and its shunting-condenser, conductor 55, contacts 20 and *y* of commutator H, main conductor 2 of circuit L, and reaching substation X through the interrupter D, the resting-contacts of keys K^2 and K and transmitter *t* back to the secondary coil of said transmitter. The two stations are now in full communication and may converse.

At the close of the communication both subscribers replace their receivers on their respective switch-hooks. When X hangs his receiver on the hook, the relay R of line L releases its armatures *g* and *h*, causing the connecting-magnet to relax its pressure on the shaft *s*, which thereupon rises, being pressed upward by the spring d^3 beneath its heel. As soon as the selector-springs *e f* are raised above the fixed terminal strips *u v*, with which they have been in engagement, there is nothing to hold the selector-arm, and, impelled by the recovery-spring n^6, it promptly swings back to its initial position and is ready for another call. Of course, the normal condition of the commutators H, P, and Q is also brought about by the return vertical and circular motions of the shaft *s* and arm E. In like manner the replacement of the receiver at Y causes relay R^2 to lose its excitement and to release its armatures, whereupon shaft *s* of line L^2 is elevated, restoring the initial condition of commutators H^2 and P^2, and this line also is now ready for further business.

We shall now describe the operations whereby intrusion upon or interruption of engaged lines is prevented and whereby a subscriber desiring to connect his circuit with an engaged line may be informed that it is already occupied. The

Digitized by Google

differential relay *r* of each line, the movable terminal *f*, united with the lower armature z^4 of said relay, the commutator Q, the contact members 26 28 of commutator P, and the musical-tone signal apparatus W, with its induction-coil I^3, are concerned in these operations.

From what has been stated it is manifest that the armatures of the differential testing or discriminating relay *r* must be attracted into their forward positions before the connection between a calling and a wanted substation-circuit can be completed. If currents of appropriate strength and direction pass through both coils of the differential relay, the said relay remains quiescent and will not attract its armatures into the said necessary position. Conversely, if a current of appropriate strength passes through the upper coil *z* only, the said relay becomes active and does attract its armatures. Since the lower relay-coil z^2 is in direct connection with the lower armature z^4 and conductor 62 with the movable terminal *f* of its own line, in order to forestall or prevent intrusion it is only necessary to provide that the moment any line becomes busy all of its fixed terminals shall be brought into connection with the ungrounded pole of the battery. Then when any third circuit endeavors to connect itself with the said busy line a circuit for the battery-current will be formed as soon as the movable terminal of the seeking line touches the fixed terminal of the wanted line, and as this circuit leads through the lower coil z^2 of the relay *r* of the third line endeavoring to establish connection it is clear that the said relay of such line will remain unoperated.

The third line accordingly is unable to connect itself with the line desired. Thus the mere act of lifting a receiver from its hook at any substation at once establishes a battery potential at the fixed terminals of the line of such substation, and it is no longer in the power of any other line to connect with that circuit, for this act closes the main circuit and operates relay R, which in turn actuates the connecting-magnet N, causing the depression of shaft *s* and the operation of commutator P, and when performed at the substation which is making the call it is therefore effective to protect the line of such station from intrusion when at the outset of the operation the attendant removes the receiver from its support before making selection. The members 26 28 of the said commutator P are brought into contact, and all of the multiple fixed terminals *v* of the circuit concerned are at once brought into conductive union with the ungrounded pole of the battery. The potential non-intrusion circuit of line L from the battery to said terminals *v* thus provided is traceable from the ungrounded pole of the battery by conductor 57, circuit-closing members 26 28 of commutator P, conductor 58, contacts c^3 c^2 of commutator Q, and wire 59, thence continuing to all of the fixed terminal points *v* of the circuit. The points *v* may be regarded as busy-test points; but in the case of a subscriber's line which has called for and has proceeded to select another circuit this testing-circuit is insufficient, for during the act of step-by-step selection the connecting-magnet is not excited, and therefore the contact members 26 28 of the key P are separated, and, secondly, even though a way should be found to unite these contacts the operation of testing by a third subscriber would tend to interfere with the proper operation of relay R of the calling-line, for the test-circuit of the intruding subscriber forming a low-resistance shunt about the said relay is liable to withdraw current therefrom to such an extent as to make its work in selection untrustworthy.

To avoid these difficulties and provide protection from intrusion from the beginning of the operation concerned in a communication and throughout until disconnection, we unite the fixed terminal test-points of the call-originating subscriber to the battery through a circuit connection independent of the circuit of his relay and talking-circuit and connecting with said battery at a point where the potential is always stable. This, as previously explained, is done by means of a commutator or circuit-changer Q, which on the first step of the selecting mechanism changes the test-circuit of the calling-line from conductors 57 and 58 to more direct conductor 89. Should a third subscriber undertake to establish communication with a circuit—say L—which is selecting or has selected and connected itself with another, the following operation would take place: The fixed testing-ter-

Digitized by Google

minals *v* of L have had the potential of the battery imparted to them, as indicated above, and when the movable terminal or selecting-spring *f* of the intruding subscriber's line descends and engages with the associated point *v* of circuit L the incomplete test and intrusion-preventing circuit of the said third circuit is closed, the differential relay thereof (whose lower or neutralizing coil is in such circuit) refuses to work, and the subscriber desiring to connect with L is unable to do so. The intrusion-preventing circuit when completed is as follows: from the battery by conductor 89 to members c^4 c^2 of commutator Q and by conductor 59 to points *v* of the engaged line L, then by movable terminal *f* of the interfering line desiring communication with L to armature z^4, back contact z^5 and lower coil z^2 of the differential relay *r* thereof completing the circuit to ground. As current is at the same time also flowing through the upper coil of said relay, the two coils oppose one another, the relay remains quiescent, and the connection cannot be secured.

In the case of desiring to communicate with a called engaged subscriber's circuit the outcome of the testing operation is the same as is reached generally in the same way, it being essential in this case also that the said circuit shall be protected from intrusion from the moment that it becomes concerned in a connection.

This occurs as soon as its passive terminal *v* is touched by the active terminal *f* of the original calling-circuit, for *f* is and consequently *v* becomes conductively united to the ungrounded battery-pole by way of conductor 62, armature z^4, and front stop z^6 of relay *r*, conductor 63, and point 7. It is therefore the action or non-action of the differential relay *r* of a line seeking to unite itself with another that determines whether or not such union shall take place, and the said action or non-action of said relay depends upon the engaged or disengaged condition of the desired line. If the said line be disengaged, the relay of the seeking line becomes operative and effectuates the union desired by uniting the main conductors of its own circuit with their normally detached movable terminals; but if the line wanted be already in use the relay of the seeking line remains unexcited, because the incomplete non-intrusion circuit has been completed through the neutralizing-coil of the relay and the battery attached to the terminals *v* of the wanted line and

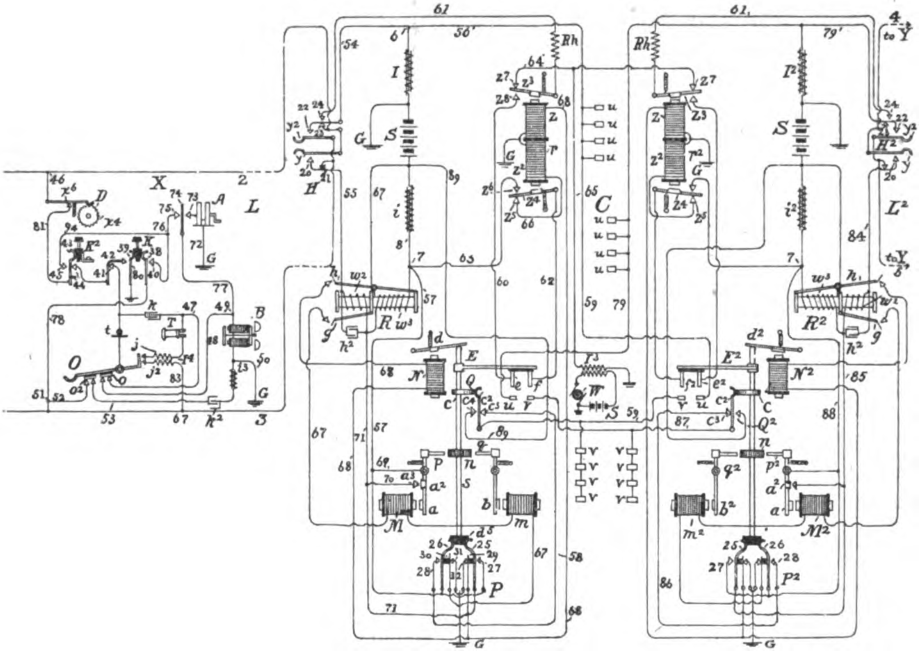

709,740—Telephone Exchange System and Apparatus.

Digitized by Google

fails to establish such union. At the same time if a wanted line is busy a tone-signal indicating that fact is transmitted over the seeking line and may be heard in the receiver of the substation of said line. This is produced by the constant operation of the tone-producing apparatus W, which rapidly interrupts the circuit of the source of current and by means of the induction-coil I^3 transmits the said tone-producing current to any line-circuit connected through conductor 65 to the secondary of said coil. The operation of the commutator H of any line connects through contact 24 the main conductor 3 or 5 thereof with the said tone-test conductor 65, provided the upper armature or switch-lever z^8 of the differential relay remains on its resting-contact z^7, as we have seen is the case if the line wanted to be busy.

The complete circuit of the busy-signal current from the tone-producing apparatus to the main conductor of any individual substation and thence through the substation-receiver is traceable by conductors 65 and 64, fixed and armature contacts z^7 z^8 of the differential relay r, conductor 61, including resistance Rh, contacts 24, 22, and y^2 of commutator H to main conductor 3, point 67 thereof at the substation, conductor 83, induction-coil winding j^2 and j when united by the switch-lever, receiver T, condenser k, and through the key K^2 and interrupter D to main conductor 2 of the substation-circuit at 46. From this point the tone-test circuit continues itself to ground mainly by the line back to the central station, through contacts y and 20 of key H, conductor 55, relay-coil and condensers w^2 and h^2, conductor 71, contacts 25 and 27 of commutator P, conductor 57, point 7, and then through the impedance-coil i and battery S to earth G. A certain portion of the tone-test current leaks to ground on the outward circuit through the impedance-coil I on the other side of the battery by way of contacts 24 22 of key H and conductor 54; but this does not at all interfere with the efficiency of said current or its ability to produce a sufficiently loud and sharp tone-signal in the substation-receivers, since the said current has abundant margin for wasteage and distribution.

Fig. 3a illustrates a modification of the intrusion-preventing apparatus, which may under certain conditions be applicable, although we regard the differential relay as being preferable. In it L is a circuit about to connect itself with L^2, which may or may not be busy. Both circuits are indicated merely by such portions as are concerned in this part of the operation. S is the common source of current. Q^4 of line L is a contact closed by the operation of the connecting-magnet N, and the contacts 26 28 of the wanted line L^2 correspond to those similarly marked in the other drawings being united if L^2 is occupied and separated if L^2 is at liberty. A single-coil relay r^5 takes the place of the differential relay r and has armatures z^3 and z^4, which may contact with front stops z^8 and z^6, respectively, but normally rest on back stops z^7 and z^5. From back stop z^5 a conductor 90 to earth is extended and contains a relay m^2, having an armature m^3, which rests on its back contact m^4. The movable terminals of L are marked e and f, as before, v and u being fixed terminals of L^2. In operation, assuming first that L^2 is busy, the contact between 26 28, which we may regard as being members of a commutator P, is closed. When by the action of the connecting-magnet and shaft s the movable terminals e f are caused to engage the fixed terminals u v of L^2, a current will flow from the ungrounded pole of battery S through contact 26 28 and by way of v and f through conductor 91, armature z^4, its back contact z^5, and conductor 90 to the relay m^2 and ground. This relay attracts its armature m^3, which separating from back-stop m^4 opens the circuit from the battery through the magnet-coil of r^5. The relay r^5 thus remains unexcited and cannot attract its armatures to unite the detached movable terminals to their respective main conductors of circuit L. Thus connection with an engaged circuit cannot be had. On the other hand, if L^2 be disengaged the contact-members 26 28 will be separated. Under these conditions when e and f engage u and v, respectively, current does not flow through the magnet of relay m^2, but does flow through that of relay r^5, which accordingly, acting as an electromagnetic switch, attracts its armatures and brings the movable terminals e f into connection with

Digitized by Google

their main conductors, thus establishing communication with L^2.

Referring again to the substation apparatus and to Fig. 2, if a subscriber wishes to ring up another station on the same line—that is to say, on his own circuit—he operates the generator A, as before, but this time presses the key K^2 instead of K, and as it is equally necessary in this instance as when connection is desired with another line to prevent interruption and to notify all subscribers that the line is engaged he also removes his receiver from the switch-hook and listens to determine whether the line is at liberty. This action operates relay R, connecting-magnet N, shaft *s*, and commutators H and P at the central station and connects fixed contacts *v* with the battery, thus establishing conditions for preventing intrusion and for transmitting the busy-signal. The pressure upon key K^2 separates contact-points 43 and 44 and unites points 43 45. The separation of 43 and 44 opens the circuit of battery S through the subscriber's set, which was closed by taking down the receiver, it being advisable that no battery-current shall be on main conductor 2, as the same to some extent acts in opposition to the ringing-current, and the opening of the main circuit causes the connecting-magnet to lose its excitement, permitting shaft *s* to rise, and restoring commutator H to its normal position. This restores conductor 2 to the grounded side of the battery S, so that the said battery is practically disconnected therefrom. The closure of points 43 45 permits the passage of the ringing-current from the generator over conductor 94 to the conductor 2, and thus to the several other bell branches thereof at other stations, as X^2, whose bells are then rung, the small portion of the current which passes to the central station and to ground through the impedance-coil I being insignificant and without material effect on the circuit. The several stations of each circuit will each have its own signal, to which alone it will respond. Thus circuit L may have, say, four stations, and a code will be provided under which three successive rings may call one station, four rings another, and so on. When the desired station has been called and the operation of the key K^2 is discontinued, the current from the battery S again operates relay R, which acting through magnet N and commutator P reestablishes the intrusion, preventing connection between said battery and the fixed contacts *v* of the circuit, maintaining the same as long as conversation between the parties continues.

It is desirable that a subscriber sending a call shall hear his own bell ring, and to that end it is necessary that a branch to ground through the home bell shall extend from the generator-circuit 94; but if this bell branch were always attached to the said generator-conductor it would sometimes happen on pressing key K^1 quickly that though the battery-circuit through contacts 43 44 were broken a new one would be formed before the relay R could be de-energized through the coils of said relay and through the battery, from the battery-ground to the ground of the bell branch, and the battery-current would still flow. To prevent this, we arrange that the bell-branch connection shall be temporary and provide the intermediate connection-spring 74, which is not connected with the generator-circuit conductor 94 until the key K^2 has been operated for an appreciable period of time and not until the operation of the generator is fairly begun.

The circuit-breakers *o* o^2 of the subscriber's telephone-switch O open the bell and balancing earth branches. The path to ground through the bell when the receiver was removed from the switch was found to provide a circuit for the current of battery S, and the said current by tending to hold attached the armatures of the relay rendered the operation of the interrupter untrustworthy and prevented the relay and selecting magnet from being perfectly responsive thereto.

The circuit-breaker *o* has been introduced for the avoidance of any such irregularity, and the circuit-breaker o^2 is added to preserve the balance while conversation is being transmitted by disconnecting also the ground connection from the main conductor 3.

Center, Texas.—The Sabine Valley Telephone Company has been incorporated; capital stock, $20,000; incorporators, E. C. Branch, W. A. King, James T. Polly, J. W. Sanders.

Digitized by Google

Francis W. Dunbar, Chicago, Ill. Reissue. No. 12,031, Sept. 16, 1902. Telephone System.

This is a reissue of Mr. Dunbar's former patent No. 689,953, which was described in the January number of the Telephone Magazine. The first patent which was surrendered in order to take out the reissue contained broad claims for using the bridged talking battery for operating the cut-off relay b. These claims have, however, been changed so as to limit them to talking conductors. In other words, the present patent is what may be termed a narrowed reissue. Ordinarily, reissues are taken out for the purpose of obtaining broader claims, but in this case the patentee seems to have thought that the Patent Office had given him more than he was entitled to. For a full description of the system, see the January number of this magazine.

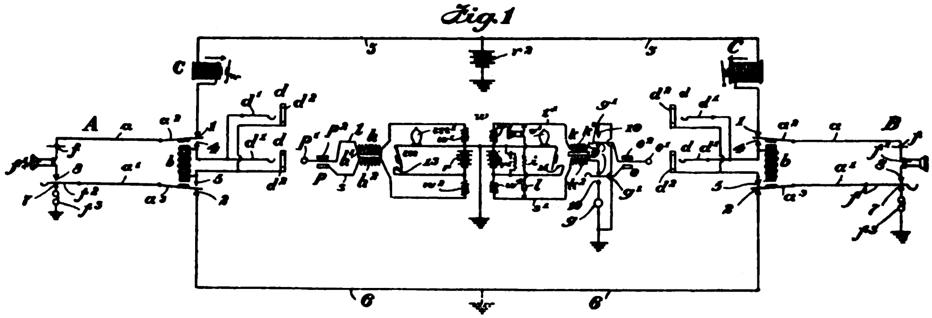

709,327—Telephone Call Annunciator.

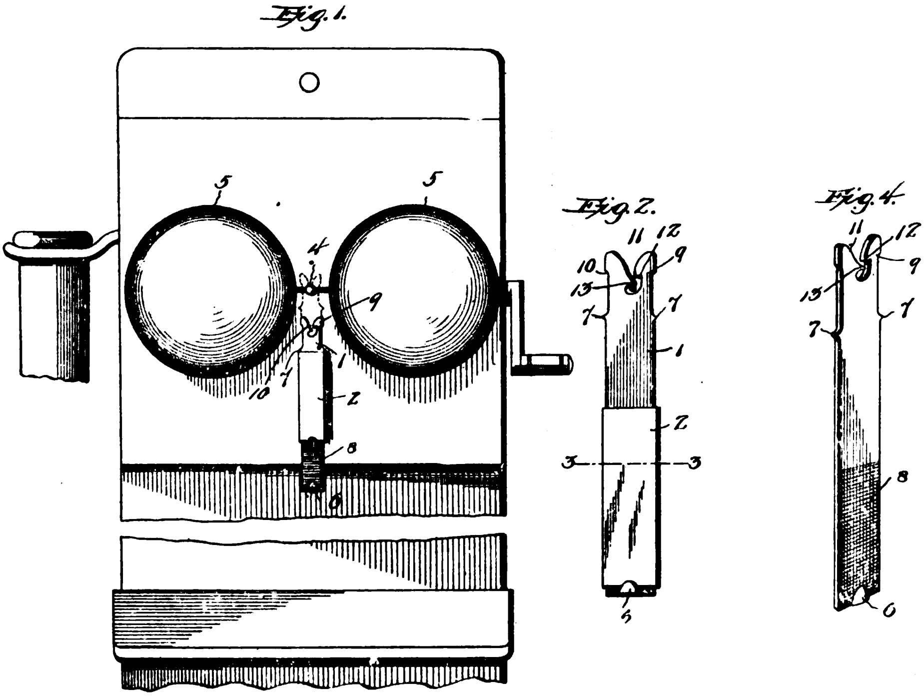

Reissue No. 12,031—Telephone System.

Zeremba E. Jackson, Atchison, Kan. No. 709,327, Sept. 16, 1902. Telephone Call Annunciator.

This is a visual indicator designed to supplement a subscriber's bell. Where several telephones are arranged side by

side in a room, it is often impossible when a call comes in to determine which bell it was that rang, but with the provision of a visual indicator no such trouble is experienced. The indicator shown in the drawings consists of the strip 1 carrying the sliding shutter 8. When the bell rings the striker vibrates the strip 1 and the shutter works loose and falls.

CHICAGO TELEPHONE COMPANY WOULD LOSE HEAVILY.

Sweeping Decision of Judge Tuley.

FROM THE CHICAGO TRIBUNE.

Judge Tuley recently gave the complainants in the suit of the Illinois Manufacturers' Association permission to amend their petition for injunction so as to enable them to secure the return of the funds alleged to have been collected in excess of the franchise rate. The construction placed on his decision by attorneys for the complainants is that 5,000 or 6,000 telephones lessees may come into the suit and become parties to it whether they are members of the Manufacturers' Association or not.

The decision of the court, it is estimated, will cost the Chicago Telephone Company more than $1,000,000 unless the Supreme Court reverses the judgment of Judge Tuley. All that remains for the complainants to do now is to prove up their claims. There were 337 lessees involved in the original suit—their claims being in the aggregate about $75,000—but all the druggists, liverymen, and private citizens who paid $175 a year for their telephones may come in and become parties to the suit, Judge Tuley holding that all may be considered together. The question as to whether they can go back of five years—the time provided in the statute of limitations—remains to be argued.

May Establish Unheard Of Precedent.

Should the Telephone Company be compelled to repay any part of the sum involved in the ruling it will be the first time in the history of the state, it is said, in which a corporation has been forced to pay back anything it had collected.

Judge Tuley in his oral decision said that since the court had held the Telephone Company should not compel its subscribers to continue paying the $50 in excess of the law it had collected in the past, the question now to be decided was whether the complainants should be forced to go into a justice court and—one by one—bring suits against the company for the return of the excess money they had paid.

"Here is a question that there are 2,000 or 3,000 parties interested in," said Judge Tuley, "one single question, and that is the right of this defendant to charge $50 a year on a certain identical contract with all of them. Now, why should all those parties not be allowed to join together and come into a court of equity and say, 'in order to prevent multiplicity of suits, we have united together and bring this one case where all these claims can be decided in the one case, by one judge, and at one hearing.' "

NEW 'PHONE CO. IN NORTHEASTERN MICHIGAN.

Saginaw, Mich., Oct. 5.—(Special.)—The Northeastern Telephone & Telegraph Company is the name of a new corporation about ready to file articles of association, and which is engaged in building telephone lines in northeastern Michigan. The company has a line in operation from Bay City to East Tawas, and the work of building the line from that point to Alpena and thence to Onaway is in progress at the rate of three miles a day. The company is also building a line up the Mackinaw division of the Michigan Central, from the Saginaw river to Cheboygan, and has twenty offices now in operation. It will require nearly a year in which to complete the three circuits to be operated between the Saginaw river and the Straits of Mackinaw, and the plant will represent an investment of $200,000. The best No. 12 wire is being stretched and the equipment will be first class. The company has a service contract with the Michigan Telephone Company for the interchange of business.

W. W. Jones of Toledo is president of the Northwestern Company, J. F. Land of Detroit is vice-president, and George E. Dutton of Saginaw is secretary and treasurer. The president stated yesterday that northeastern Michigan is being rapidly developed, and the outlook for the company is flattering.—*Detroit Free Press.*

Digitized by Google

KEYSTONE TELEPHONE COMPANY TO INVADE NEW YORK.

INDEPENDENT COMPANIES PLAN WAR ON THE BELL.

The Older Corporation's Monopoly in Boston and Chicago, Also, to Be Attacked—Philadelphia Concern the Basisf or the Attempt.

The Keystone Telephone Company will make an effort to enter New York, Boston and Chicago within a few months, according to an official of the company. Those places are now controlled by the Bell corporation, which is using every means, it is said, to maintain its monopoly.

Plans for an invasion of this territory have been carefully discussed within the last six months following the success of the Keystone system in this city and of the Independent lines elsewhere. Those who are promoting the contest refuse to talk of its details, but one of the financial agents said yesterday: "New York will have an Independent system under way within twelve months."

It is understood that the Keystone State Telephone Company, which is controlled by Congressman Robert H. Foerderer and John M. Mack, managers of the Keystone Company in this city, will form the basis for the extension of the Independent service.

On Wednesday the Keystone State Company will open its long distance service, which will give it connection with Pittsburg and the other sections of Pennsylvania, with Buffalo and New York state, with Baltimore and the South and with Cincinnati and the West.

The United Independent Lines.

By an agreement effected with the United Telephone and Telegraph Company and other concerns operating Independent lines, the connections named will be made. There has been no consolidation of interests, according to officials of the Keystone and United companies, and the agreement is called a "traffic arrangement."

The lines said to be included in the "traffic arrangement" are the United, which extends into Lancaster, Dauphin, Lycoming and other counties; the Standaid, operating in the Schuylkill valley; the Interstate, with a system covering New Jersey; the Eastern in Camden, and the Maryland, which affords the necessary connections with the South and West.

Of those lines, the Maryland is first in importance at present, by reason of its extensions. The Keystone State Company has completed direct trunk lines to Chester and Wilmington to meet the Maryland lines. Twenty pairs of lines were installed to Wilmington, of which ten will go directly to Baltimore.

C. E. Wilson, general manager of the Keystone Company, said recently that the Independent telephone instruments now in use outside of cities where no entrance has been effected are 1,000,000 in excess of its rival. In Pennsylvania there are 155,000 Independent 'phones in use and controlled under the "traffic arrangement" by the Keystone State Company. Of that number it is said that 6,500 are in operation in this city, with contracts for 9,000 more.

Will Try Washington Later.

In connection with the fight to be made to enter New York, Boston and Chicago, it is said that the only other city of importance which has no Independent line is Washington. It is not intended to attempt to establish service there until the New York-Chicago deal has been consummated.

Regarding financial support, which will be required in unlimited quantities to insure the success of the project, it is said that several men who are prominently identified with big commercial enterprises will be connected with the scheme. Most of the Independent country systems were constructed by local capital and absorbed by the larger concerns when they had been placed on a profitable basis.—*Philadelphia Public Ledger.*

Marshallville, O.—The Marshallville Incorporators, William Beldler, D. W. Kaufman, C. W. Biddle, H. H. Bachman, L. Hinderer, Jacob Ault, John Weiner, Edson Stinson, Benjamin Ault; capital stock, $1,000.

Digitized by Google

Telephone Magazine

An Independent Illustrated Journal

PUBLISHED BY

The Telephone Magazine Publishing Co.

JNO. R. DARE, President

Medinah Temple, - Chicago, U. S. A.

TEL. HAR. 4148

C. E. KAMMEYER, Editor

LONDON: 2 Exeter St., Strand, London; W.C.

SUBSCRIPTION

One year, United States and Canada	$1 00
One year, foreign countries	1 50
Single copies	10

COPYRIGHT

The title and contents of this paper are covered by a general copyright. Permission from publishers must be obtained before any article or table is copied, or any illustration reproduced.

CHICAGO, OCTOBER, 1902.

ANNOUNCEMENT.

Beginning with this, the October issue, the TELEPHONE MAGAZINE will be published by the Telephone Magazine Publishing Company, with Mr. John R. Dare as president. Mr. Dare has been in business in Chicago for the past ten years, and during that time has had opportunities to become thoroughly familiar with the publishing business, as well as the telephone field.

The acquisition of Mr. Dare's services to the TELEPHONE MAGAZINE will enable us to bring the paper up to the highest standard in a literary, mechanical, and technical way.

The lateness of going to press with this issue is due to the fact that arrangements for the transfer of the publication were completed at the eleventh hour. Our readers may rest assured that hereafter the TELEPHONE MAGAZINE will be devoted exclusively to the furtherance of Progressive Independent Telephony. No one engaged in the manufacture or sale of telephone apparatus, either directly or indirectly, has any financial or pecuniary interest in the TELEPHONE MAGAZINE.

We only recognize one enemy:

THE BELL.

Trusting that we will have the unanimous support and friendship of the Independent Telephone Companies, as well as the manufacturers, we are,

Very respectfully,

TELEPHONE MAGAZINE PUBLISHING CO.

BONDHOLDERS BRING SUIT.

Bondholders of the Citizens' Telephone Company filed suit in the Circuit Court recently to foreclose a mortgage on 2,000 of the company's outstanding bonds. Judgment for $30,000 is also asked.

The defendants are the Citizens' Telephone Company, the United States Trust Company of Kansas City, the German-American Bank and a number of individual holders of bonds.

A similar suit was brought against the Telephone Company last August by the United States Trust Company and was later dismissed, the company since then refusing to reinstitute suit.

This refusal enabled the bondholders themselves to reinstitute proceedings.

The petition recites the history of the bond issue from March, 1894. The United States Trust Company is now said to hold 691 of the bonds. They were to run twenty years, being for $50 each and bearing 7 per cent interest.—*St. Joseph (Mo.) Gazette.*

THE PLEASURE OF THE PARTY LINE.

The DeKalb County Telephone Company has put in a toll line to Lee, Illinois. Between here and Lee a farm line has been established. It is called Malta Farm Line No. 6. The telephones are as follows: Central, 3 rings; Lewis Eames, 1 long; Frank Young, 2 long; Wm. Carroll, 1 long, 1 short; J. M. Blair, 1 short, 1 long; Ira Johnson, 1 long, 1 short, 1 long; Lester Veale, 2 long, 1 short; Wm. Grover, 1 long, 2 short; J. W. Bowler, 1 short, 2 long; Jacob Larson, 1 short, 1 long, 1 short; H. W. Rowe, 2 short, 1 long; Bowden & Delbridge, 2 short, 2 long; Phillip Plapp, 2 long, 2 short; H. A. Van Patten, 3 long, 1 short and George Welch, 3 short, 1 long.—*DeKalb, (Ill.) Review.*

Digitized by Google

TRADE NOTE.

We have just received from the Smith & Hemenway Co., of 296 Broadway, New York City, a copy of the fourth edition of the Green Book of Hardware Specialties. This book is considerably larger than their last one. It contains 144 pages of highly interesting matter and is illustrated throughout by a number of half-tones. This book contains illustrations of all articles manufactured by the Smith

The Green Book.

& Hemenway and Utica Drop Forge & Tool Co.'s. It is printed on green paper and each page has an attractive border in orange around it. This book will be quite an addition to the catalogue file of any up-to-date dealer. The illustrations show reduction of page number 27 and the book itself. When writing for same kindly mention the TELEPHONE MAGAZINE.

CALL AGAIN

There was a "hello" girl,
And she had a little curl
Right in the middle of her forehead.
When she was good
She was very, very good;
But when she was bad she gave you the busy signal.
—*Bert L. Taylor in "A Linc-O'-Type Or Two."*

POST CHECK CURRENCY.

FROM THE DISPATCH, PITTSBURG, PA.

It is stated by an authority that has been giving some attention to the question of the Post Check Currency that if business men and business organizations urge the passage of legislation to provide it the action of Congress can be secured at the next session. That being the case there should be a general call for that action.

The Post Check Currency means simply the printing of circulating notes in such form that the holder endorsing a note in his possession can convert it into a draft payable only to the person named in the endorsement. This will do away with the loss of time, annoyance and expense of a journey to secure a money order every time that the sending of a small remittance is necessary. The saving to the public will immensely outweigh the slight increase in cost to the government, and the loss of revenues from money orders. There should be a strong representation to Congress in favor of the bill.

Citizens should request their representatives in Congress to see that more convenient money is furnished the people.

IT WRITES THE MESSAGES.

Telephone That Permanently Records Conversations Sent Over Wires.

Peter Oluf Pedersen of Copenhagen has secured a patent for an instrument which he calls the telegraphone and by which he can use a number of messages on a single steel strip and to reproduce each message without interference from the others. With this improvement the size of the drum or the length of the wire or ribbon used therein may be materially lessened, so that a long speech or a number of speeches or signals may be stored upon a comparatively short or small magnetic body. The telegraphone, as the name implies, is a combination of the telegraph, telephone and the graphophone or phonograph. By the use of this device a telephone or telegraph conversation can be recorded at any time and as often as desired without the record deteriorating. In this apparatus a steel wire or a steel band is moved by any suitable means with considerable velocity between the poles of a small electro-magnet. On speak-

Digitized by Google

ing into a telephone transmitter joined on the circuit the undulatory currents set up in the transmitter react upon the electro-magnet and cause a continuous variation in the direction and degree of magnetism at the poles of the electro-magnet.

These variations are permanently recorded on the steel wire as it rushes by, and when the message is complete the steel wire retains a definite record of what has taken place in the shape of a continuous series of transverse magnetized lines varying throughout in their polarity and in their strength. On connecting a telephone receiver to the electro-magnet and again starting the wire in its course this magnetized wire generates electric currents in the coils of the super-imposed magnet as it passes between its poles and these electric currents, which are the exact counterparts of those generated by the original voice, cause the telephone to repeat what was said in an almost absolutely perfect manner.—*Chicago (Ill.) Chronicle.*

TELEPHONE PROGRESS IN CANADA.

FROM THE TORONTO (ONT.) MONETARY TIMES.

The recent new issue of $150,000 of stock by the Nova Scotia Telephone Company, which has been entirely subscribed, is to be used for extension and improvement of the company's line to the eastward. Hitherto, its wires have not extended farther than New Glasgow, but an extension is to be made eastward from that town to the strait of Canso, where connection will be made with the system of the Eastern Telephone Company, which operates in the island of Cape Breton. The service of the latter company, meantime, is being improved, with a modern exchange in Sydney, and it is understood that the acquirement of control in the Eastern is part of the Nova Scotia's plan. Meantime, the improvements wrought by the Nova Scotia Telephone Company in its system are very considerable. The service in Halifax has been entirely reorganized with a relay switchboard, underground wires in congested districts, long distance instruments, and other modern contrivances, so that Halifax now enjoys a thoroughly satisfactory system. The trunk line also has been vastly improved by replacing the old galvanized wire by copper. The capital of the company is now $450,000 with reserves of over $130,000. When it commenced business in 1888, the paid-up capital was only $170,000, it had no trunk line, and its service consisted of less than 900 telephones. The gross revenue then was $20,000. Last year the service consisted of 2,700 telephones, its earnings were about $90,000, and the few hundred miles of galvanized iron wire in use in 1888 had been almost entirely replaced and new copper wire strung, bringing the total mileage up to 1,670.

TELEPHONE EXTENSION IN IOWA.

The rapid extension of telephone lines in the farming districts of Iowa during the past two years has been marvelous. No public utility of equal value and convenience has been furnished patrons at such trifling expense as the telephone, and hence the number of lines has multiplied rapidly.

The extent of the construction of telephone lines in Iowa is shown by the report of the state executive council on the assessment of telegraph and telephone companies which has just been issued by the state printer. According to statistics secured for the assessment of telephone lines there were in this state at the beginning of the present year a total of 651 separate telephone companies actively doing business in every county in the state was supplied with a dozen or more companies. The organizations had in operation according to their own figures a total of ,409 miles of line, which were assessed at nearly $1,000,000, a very small estimate of their worth.

Briefly stated, from 1900 to 1901 there was an increase of 138 per cent. From 1901 to the present year there was an increase from 238 to about 648, or a growth of more than 170 per cent. The growth from 1900 to 1902 was about 538 per cent.

While the telephone is designed to annihilate distance, its greatest use is in direct ratio to its nearness, chiefly because people are concerned most in their immediate surroundings. The long-distance telephone, however, is coming into greater use, though such communication is attended with more difficulties. Conversations between persons a thousand miles

Digitized by Google

apart are not infrequent; yet for business purposes there are difficulties and limitations that prevent its general use. One thing that will retard it is the difficulty of duplexing telephone circuits, for the reason that for simultaneous conversations separate lines of wire are absolutely necessary. This is pointed out by the Electrical Review, which rather discouraged the idea of its utility for long-distance purposes. For short distances, however its use is merely in its infancy.—*Times-Republican,* Marshalltown, Ia.

TELEPHONE FRANCHISE FIGHT.

Another Company Enters the Fight—Council Must Hold Meeting.

Something over two weeks ago the Interstate Independent Telephone Company, which wants a local franchise, filed an ordinance with the city clerk with a view of having it introduced at the first regular meeting of the council. The council has not met for general business since the measure was filed.

Recently a local attorney drew up an ordinance providing that a franchise be granted to an entirely new company. This company is said to be backed by George Parks, Joseph Murphy and several other prominent local business men. It is understood that Councilman Queenan will father this ordinance at Monday night's meetings of the council.

The Interstate Independent Telephone Company proposes to have its proposition for a franchise submitted to a vote of the people at the November election and preparations for that purpose are complete. If the council refuses to meet, the company will ask for a mandamus to compel it to hold a general business meeting.—*Omaha (Neb.) News.*

GETTING VALUE FOR THE FRANCHISE.

MOLINE (ILL.) MAIL.

In moving against the Central Union Telephone Company, and starting action to annul the franchise under which it has operated here for nearly twenty years, the city is not actuated by a spirit of resentment or animosity which means persecution. It is simply a question of whether the Central Union shall enjoy special favors at the hands of the city or whether both companies, enjoying like franchises, shall not give equal returns for them.

The mayor and the members of the city council say that they shall and they intend to enforce their decision by repealing the present franchise of the Central Union and submit for the approval of the company one ordinance similar to that agreed to by the new rival of the present company. They believe that if the newcomer can meet these terms and at the same time make money in the field, then the other company can do as well by the city. If the Union Electric can pay the city a percentage of the gross receipts, then the Central Union is expected to do likewise. Not only is it expected to do this, but it is to be compelled to do so or vacate the rights which it now enjoys.

NEW TELEPHONE COMPANY FOR MICHIGAN.

The Northeastern Telephone & Telegraph Company is the name of a new corporation about ready to file articles of association, and which is engaged in building telephone lines in northeastern Michigan. The company has a line in operation from Bay City to East Tawas, and the work of building the line from that point to Alpena and thence to Onaway is in progress at the rate of three miles a day. The company is also building a line up the Mackinaw division of the Michigan Central, from Bay City to Cheboygan, and has twenty offices now in operation. It will require nearly a year in which to complete the three circuits to be operated between the Saginaw river and the Straits of Mackinaw, and the plant will represent an investment of $200,000. The best No. 12 wire is being stretched and the equipment will be first-class. The company has a service with the Michigan Telephone Company for the interchange of business.

W. W. Jones of Toledo is president of the Northeastern Company, J. F. Land of Detroit is vice president, and George E. Dutton of Saginaw is secretary and treasurer. The president stated recently that northeastern Michigan is being rapidly developed, and the outlook for the company is flattering.—*Bay City (Mich.) Times-Press.*

Digitized by Google

TELEPHONE COMPANIES' RIGHTS.

Philadelphia. — Telegraph men are equally interested with telephone companies in the recent opinion of Judge Weiss of Harrisburg, holding that a telephone company enjoys the right of eminent domain in the same manner as do railroad companies.

J. P. Altberger, superintendent for the district of eastern Pennsylvania and New Jersey of the Western Union Telegraph Company, was asked if the decision affected his company's fight with the Pennsylvania railroad and the Postal Telegraph Company over their poles and wires along the railroad right of way.

"I understand," said he, "that the decision applies to telephone companies particularly, but telegraph companies are interested. The building of new lines in this state may be expedited through the eminent domain decision. We are not surrendering an inch and have gone right ahead and constructed into all the towns where the railroads cut us off. Our old poles and wires stand."—*New York Commercial.*

RULING MARKS LAW'S PROGRESS.

"I think the law has progressed that far, and if this is a step in that direction I feel inclined to make it. Why should not the law progress as well as other sciences and professions? I do not hold in this case that the court has such jurisdiction to grant such an amendment. It is true that somebody may have the defense of the statute of limitations. Let them make it. They may have other defenses, but in the absence of incidental defenses the main question underlying this whole matter is on the contract, the legal right to charge this $50 and the motion for leave to file the amendment will be granted."

"The decision speaks for itself," said Attorney Levy Mayer, counsel for the Manufacturers' Association. "All that the complainants have to do now is to prove their claims and judgment will be entered."

Attorney Charles S. Holt, counsel for the telephone company, placed another construction on the decision.

"It does not extend beyond the com-

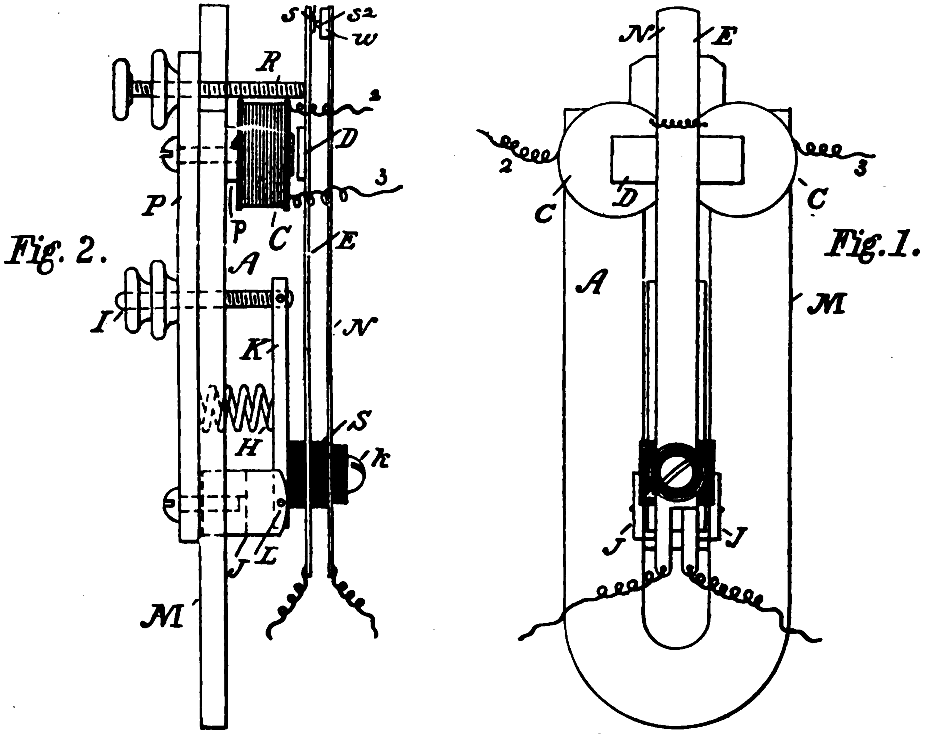

708,539—Vibrating Current Relay.

plainants included in the petition of the Manufacturers' Association," he said. "I do not understand that it extends to others who feel that they have the right to become parties to the suit."

WILL OUST CENTRAL UNION.

At the meeting of the city council last evening the franchise held by the Central Union Telephone Company was attacked. By unanimous vote the city attorney was ordered to report in an ordinance repealing the franchise and declaring it illegal and forfeited on account of the operators' strike. The committee appointed to investigate the causes of the strike and the rights of the operators submitted the following conclusions, which were made the basis of action by the council:

(1) That the wages are insufficient; (2) the hours, 9½ a day, 12 at night, are too long; (3) the ventilation of the building is bad; (4) night operators are required to do sweeping; and (5) the heat is insufficient and operators must keep up fires.

A resolution was also adopted imposing a license fee of $25 a year on every telephone pole within the fire limits and also one imposing a fee of $5 on every instrument of companies which employ operators who are not bona fide residents of the city.—*Moline (Ill.) Mail.*

FINE SHOWING OF LOCAL TELEPHONE COMPANY.

The Local Telephone Company has just completed its first quarterly statement to its stockholders, to accompany its dividend checks due Oct. 1. The showing made is an excellent one and is gratifying both to the officers and the stockholders, of whom there are many in Bellevue.

Receipts for rents and tolls for three months	$7,255.78
Expenses and taxes	$3,863.63
Dividends	$1,125.00
Surplus	$2,267.15
Total	$7,255.78

The development of the property which the company is making will enable it to show even a larger surplus for the other quarters of the year, and a considerable amount will be added to the annual earnings from its share of the surplus of the Shelby and Crestline plants, not included in the above.

Many extensions and improvements to the property are under way and more are contemplated. The applications for 'phones are coming in so rapidly that the company is hardly able to keep up with the demand.—*Syracuse (N. Y.) Journal.*

BELL 'PHONES ORDERED OUT.

Decatur Agree to Try a New Telephone System.

New Decatur, Ala., Oct. 8.—(Special.)—At a meeting of the city council last night the Southern Bell Telephone Company were given sixty days to remove their poles, wires, 'phones, etc., from the city. An ordinance was passed giving the right to Jas. E. Brailey and associates to put in a telephone system here. They agree to commence construction work within sixty days and to have the system completed by April 1, 1903. The Decatur Council also passed a like ordinance.—*Nashville (Tenn.) American.*

NEW TELEPHONE COMPANY.

Files a Deed of Trust in Wilmington, Del., for $100,000,000—To Give a Two-Cent Service and Rival the Bell System.

The International Telephone Company has filed a deed of trust for county record at Wilmington, Del., for $100,000,000. This company was recently chartered at Dover, and proposes to install telephones and charge a uniform price of 2 cents a call. It is claimed that the capital stock has been subscribed in New York, Washington and Baltimore, and that patents have been acquired for telephone instruments that will reduce the cost to one-fifth of existing prices. Property has been purchased in Washington.

It was pointed out by an authority that the 2 cents per call proposition would be an enormous reduction of cost in large cities, but for residences in small towns would amount to about double existing rates. Efforts have been made for some time through a prominent trust company to effect an amalgamation of telephone interests in Delaware, but have repeatedly failed. The officials of the new company, which, it is stated, will shortly increase its capital to $200,000,000, are:

Digitized by Google

B. Rhinehart, Waynesboro, Pa., president; Ehlen B. Harrison, Baltimore, treasurer; Henry F. Fahey, New York, secretary; J. Miller Kenyon, Washington, assistant secretary.—*New York Mail and Express.*

COMMERCIAL INTELLIGENCE.

The Haines & Noyes Co., manufacturer of Telephone apparatus, Chicago and New York, U. S. A., announces the following sales during the past month:

The McCoy Hotel, Chicago, large telephone system throughout the hotel.

Large private telephone system in the residence of Mr. David B. Jones, Chicago, consisting of Flush telephones made up in special woods.

A system of 50 telephones and Central Energy Switchboard for the Union Special Sewing Machine Co., Chicago.

A 400-drop Central Energy Board and telephone apparatus for East Aurora, N. Y.

A 300-drop Central Energy Board and telephone apparatus for Hamburg, N. Y., as well as a number of smaller exchanges.

A telephone system for the apartment building of Mr. Lockwood, Evanston, Ill.

A large shipment of telephones to Companie Industriale, Mexico; to the Electrical Construction Co., London, and to the Aurora Hospital, Aurora, Ill., through the M. B. Austen Electric Co., Chicago.

One hotel system and one large office building system for Los Angeles, through the Woodill & Hulse Electric Co.

A large order of telephones for H. B. Lee, Buffalo, N. Y., for McDonald & Willson, Toronto, as well as several large private telephone plants for well-known factories.

The Haines & Noyes Co., announces that the September business has been the largest on record.

INDEPENDENT ITEMS.

Wilkinson, Ill.—The Wilkinson, Simmons & Woods Telephone Company has been incorporated by John W. Reeves, W. H. Simmons, W. D. Thomas, G. H. Jackson and Walter Woods, all of Hancock County. The company has a nominal capital of $210.

Depere, Wis.—The Valley Telephone and Telegraph Company has made application to the city council for a franchise in the city. The company claims better service and promises cheaper rates than the Wisconsin Telephone Company.

Jefferson City, Mo.—The Jefferson City Telephone Exchange has been purchased by Messrs. Lester S. Parker, Houck McHenry and A. M. Hough. The exchange was owned by the Capitol Telephone Company of this city and was considered an excellent plant, being newly installed. The purchasers announce that there will be no change in rates.

Marysville, Kan.—The Interstate Telephone Company in this county is reaching out for new business. At present the only town in the county not reached by this company is Oketo and negotiations are now on foot for a wire into that town. Besides this the Interstate Company has connections with all the Independent rural lines throughout the county.

Pontiac, Mich.—Connections have been made between the Alma Telephone Company and the local Independent Exchange, and Pontiackers can now talk to almost all points in central and western Michigan without resorting to the Bell 'phones. Work has been going quietly on for some time with this end in view and the Independent Company considers it a great victory.—*Detroit (Mich.) Tribune.*

Clarence Trovillo, a resident of Ross County, has brought suit in the United States court against the American Telegraph and Telephone Company of New York (Bell) for $10,450 for injuries received while engaged in assisting to construct a telephone line in Ross County. The plaintiff states that he was injured so that he was laid up for several months and permanently damaged by an accident in which a wagon, operated by the defendant, broke down. He states that a wheel came off and striking him on the leg threw him heavily in the street in the village of Point Pleasant. The wagon was old and defective and he received these injuries through the neglect of the defendant.—*Columbus (O.) Dispatch.*

Digitized by Google

Digitized by Google

American Central Energy **Transmitter**

FAR SUPERIOR TO THE BELL

LONG DISTANCE SOLID BACK

AMERICAN CENTRAL ENERGY TRANSMITTER

WHEREVER INTRODUCED THIS TRANSMITTER HAS BEEN PRONOUNCED THE MOST EFFICIENT AND POWERFUL TRANSMITTER EVER MADE. THIS BEING THE OPINION OF ENGINEERS WHOSE JUDGMENT IS BASED UPON EXHAUSTIVE TESTS.

American Electric Telephone Co.

36 to 58 West Jackson Boulevard, Chicago, U. S. A.

Digitized by Google

The TELEPHONE MAGAZINE

INTER-STATE
TELEPHONE CONVENTION
CHICAGO
Dec. 9-10-11, 1902.

Volume
XX
Number
134
DECEMBER
1902

THE TELEPHONE MAGAZINE PUBLISHING CO.
MEDINAH TEMPLE, CHICAGO, U.S.A.

FOR INDEX TO ADVERTISERS AND TABLE OF CONTENTS SEE PAGE XVIII.

Digitized by Google

THE CONNECTICUT INSULATING WIRE CO.

Manufacturers of MAGNET WIRE.

Sizes No. 14 to No. 40, Cotton or Silk, Single or Double carried in stock in Chicago.
We manufacture fine sizes of Magnet Wire for Telephone Manufacturers.

Phone Harrison 3262. CHICAGO OFFICE: 1501 Monadnock.

ELECTROSE MFG. CO.

Manufacturers of TELEPHONE SPECIALTIES

Receiver Shells—all kinds—Mouth Pieces, Telephone Knobs and Key Handles,
Generator Crank Handles, Bushings, Socket Nipples, Etc., Etc.

Phone Harrison 3262 CHICAGO OFFICE, 1501 Monadnock Block.

CROSELMIRE & ACKOR

Gold, Silver and Platinum REFINERS

Platinum in Sheet or Wire for all purposes. Platinum Scraps Purchased

Phone Harrison 3262 CHICAGO OFFICE, 1501 Monadnock Block

CRAWFORDSVILLE WIRE & NAIL CO.

MANUFACTURERS OF

STEEL, B. B. and EXTRA B. B. GALVANIZED IRON WIRE.

We Guarantee our Wire to be Well Made and Adapted for TELEPHONE PURPOSES.

Phone Harrison 3262. CHICAGO OFFICE, 1501 Monadnock Block.

SPEER CARBON COMPANY

Manufacturer of

CARBON BACKS AND SPECIALTIES FOR TELEPHONES—ALSO LIGHTNING ARRESTER CARBONS OF EVERY DESCRIPTION . . . . .

ST. MARYS, PA.

J. E. ROBINSON, ELECTRO-METALLURGIST

ESTABLISHED 1879

ELECTRO-PLATING AND ARTISTIC METAL WORK

Replating and Refinishing Telephone Parts a Specialty

43 W. Van Buren St., Cor. Canal Phone Harrison 420 CHICAGO

JUKES & SHAFER

GENERAL JOBBING

JAPANNERS

Special Attention Given to Manufacturing Trade

Telephone Parts a Specialty

201 S. Desplaines Street Phone Monroe 228 CHICAGO

DO YOU USE **"Polishing Cream?"** THE UP-TO-DATE CREAM of all POLISH

Especially adapted for TELEPHONES AND SWITCHBOARDS. Used and endorsed by the leading manufacturers.

Manufactured by FRANK J. LAMBERSON, JAPANNER and ENAMELER OF TELEPHONE PARTS.

Sample bottle if you mention "The Telephone Magazine."

173-175 South Clinton Street, CHICAGO

Digitized by Google

Weston Electrical Instrument Co.

Waverly Park, NEWARK, N. J., U. S. A.

PORTABLE
DIRECT READING

Voltmeters and Wattmeters

For Alternating and Direct Current Circuits.

The only standard portable instrument which deserves this name.
Absolutely permanent, if not abused.

Portable
Direct Reading

Voltmeters,
Milli-Voltmeters.
Ammeters,
Milli-Ammeters.

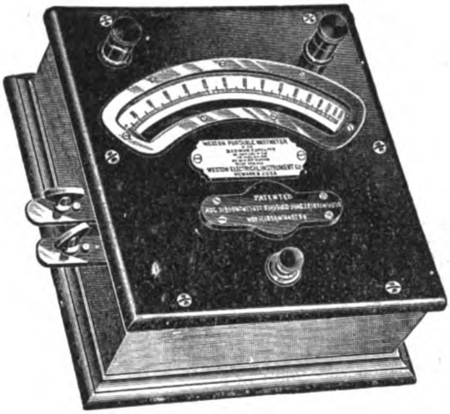

PORTABLE DIRECT READING WATTMETER FOR ALTERNATING AND DIRECT CURRENTS.

A NEW CATALOGUE
ON

Voltmeters, Potential Indicators, Ammeters

FOR

Central Stations

AND

Isolated Plants.

Highest Accurancy
Least Consumption
of Energy.

SEMI-PORTABLE LABORATORY STANDARD VOLTMETERS AND AMMETERS.

The most accurate and most convenient absolute standard ever offered.

Correspondence Solicited.

BERLIN—European Western Electrical Instrument Co., Ritterstrasse No. 88.

LONDON—Elliott Bros., No. 101 St. Martins Lane.

CHICAGO EDISON CO.

DEALERS IN

ELECTRIC LIGHTING SUPPLIES

139 ADAMS STREET

CHICAGO

COOK PROTECT

That Cook Protectors are standard is proven by the fact that they are in use
durability and efficiency. I not only give absolute protection against lightning
infringement suits, as *I own and have exclusive rights under my patents.*

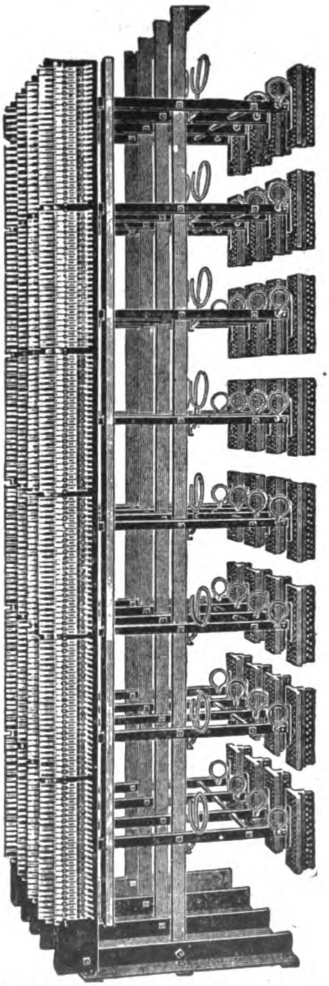

Type L.—Cook Main Distributing Iron Frame with Strong and Sneak Current Protectors. Patented May 20, 1890; July 8, 1902; Aug. 12, 1902; Aug. 12, 1902. Other patents pending. All sizes. Any capacity.

Type G.—Cook Tubular Line Fuse combined with carbon plate lightning arrester mounted on strips. Any number of pairs. Patented May 20, 1890; Oct. 21, 1902.

FRANK

MANUFAC

Pole Top Terminals, Combined Cable Termi-
Strong Current Protectors, Sneak Current

240-244 W. Lake St.,

Digitized by Google

ORS STANDARD

throughout the world. This should convince prospective purchasers of their and other foreign currents, but also protect my patrons from all liability of Complete Catalogue being compiled.

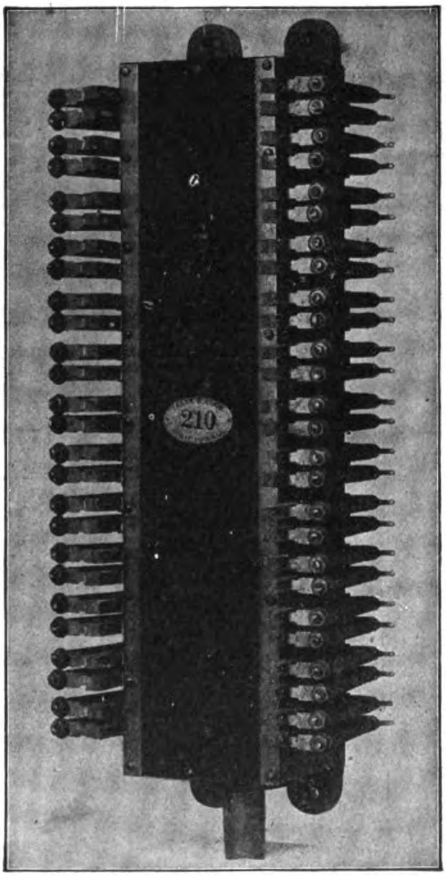

Type N.—Cook Pole Cable Terminal with Line Fuse and Carbon Plate Arrester. Patented May 20, 1890; Oct. 21, 1902. Other patents pending. All sizes, 25 to 100 pairs.

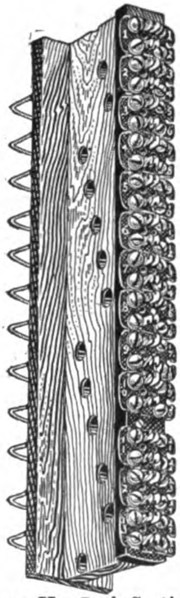

Type II.—Cook Sectional Distributing Board. All sizes, 100 to 2000 pairs capacity. Patented Oct. 15, 1901.

B. COOK

TURER OF

nals and Protectors, Lock-Out Cable Terminals, Protectors, Heat Coils, Distributing Boards.

CHICAGO, U. S. A.

Digitized by Google

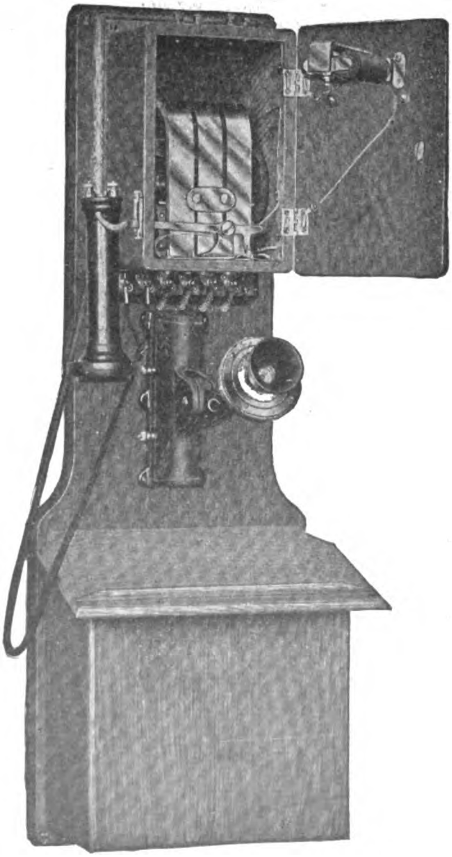

TELEPHONE SUPPLY HOUSE

SEND FOR OUR NEW 1903 CATALOGUE AND BOOK OF INSTRUCTION

15 Different STYLES of TELEPHONES

WIRE ALL GRADES

CABLES

Batteries

Receivers

Transmitters

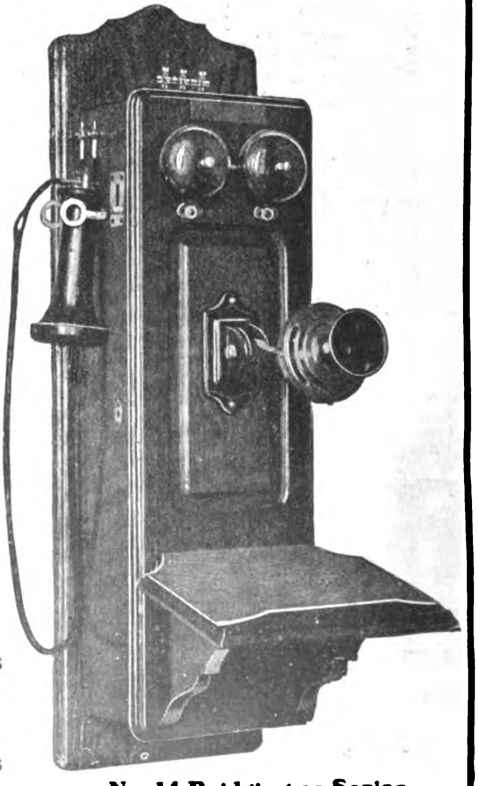

No. 7A Bridging 100,000 ohm. **No. 14 Bridging or Series.**

Digitized by Google

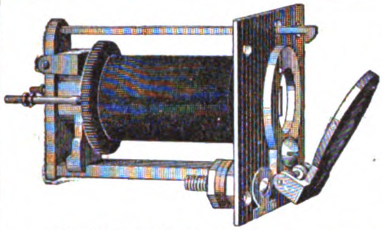

FARR TELEPHONE & CONSTRUCTION SUPPLY CO.

118 and 120 WEST JACKSON BLVD.,

CHICAGO.

MANUFACTURERS AND DEALERS

TELEPHONES, SWITCHBOARDS, DROPS, PLUGS, JACKS, CORDS, GENERATORS, BATTERIES, COILS, LINEMEN SUPPLIES, TOOLS, WIRE BRACKETS, PINS, CROSS ARMS, AND INSULATORS.

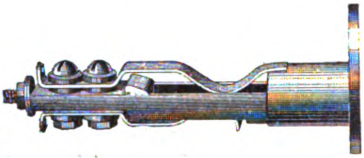

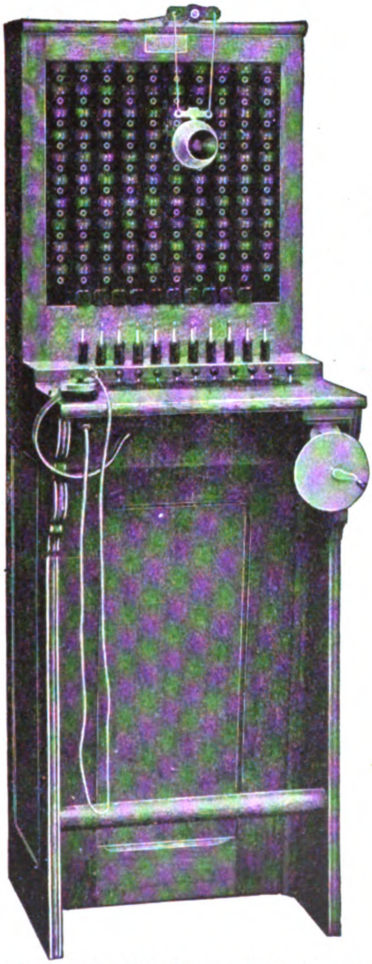

100 Drop Tubular Express Switchboard

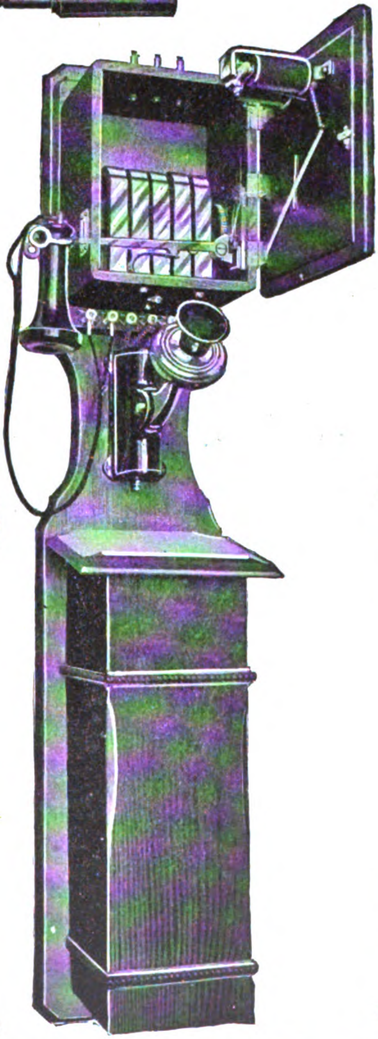

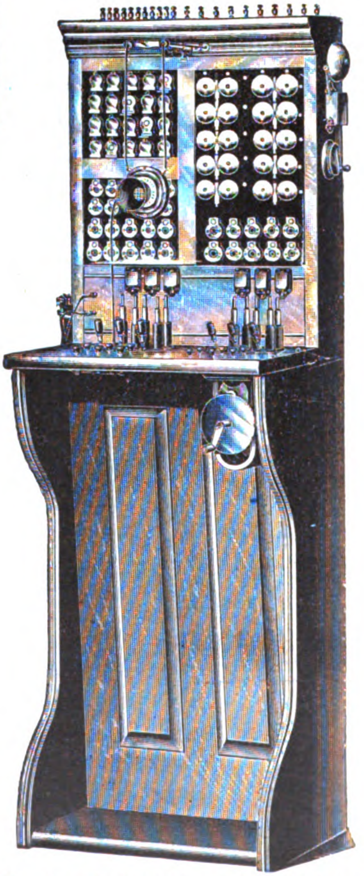

No. 1 Switchboard—Capacity 30 drops, with 20 drops and jacks mounted.

Digitized by Google

Delegates and Visitors:

You are cordially invited to visit our exhibit and factory and make them your headquarters ❧ Our equipment will interest you.

International Telephone Mfg. Co.
Harrison and Clinton Streets,
CHICAGO.

Digitized by Google

INTERNATIONAL TELEPHONES

STAND UNEQUALLED
NEVER FALL DOWN

They Challenge the World's Past Champions to an INTERNATIONAL Contest.

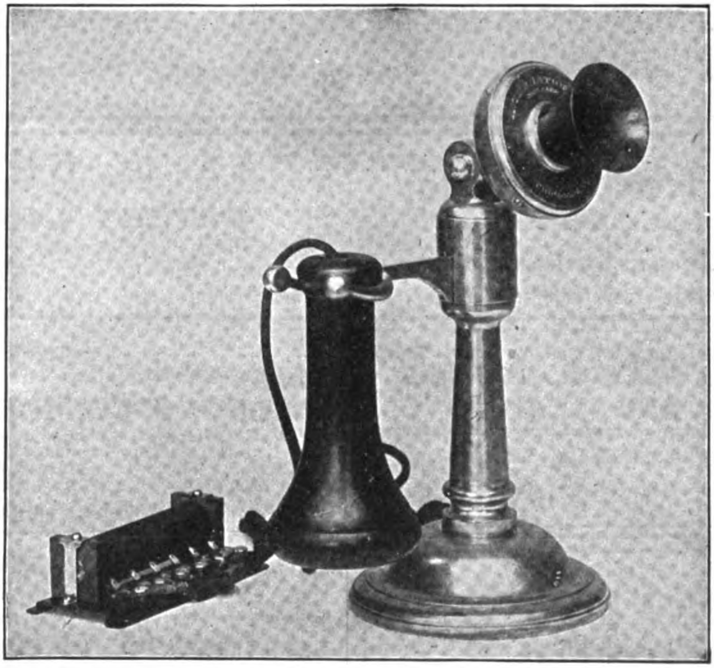

No Exposed Metal Parts Form Any Part of the Circuit at Any Time.

CENTRAL ENERGY GENERATOR CALL TELEPHONES

OF ANY STANDARD STYLE

SWITCHBOARDS MULTIPLE TRUNKING

Central Energy, Lamp Signal, Double Supervisory for any size Exchange. Correspondence Solicited

International Telephone Mfg. Co.

Harrison and Clinton Streets, CHICAGO, U. S. A.

Digitized by Google

Willard L. Candee, H. Durant Cheever, } Managers.
1889, Paris Exposition—Medal for Rubber Insulation.
1893, World's Fair—Medal for Rubber Insulation.
Geo. T. Manson, Gen. Supt.
W. H. Hodgins, Secretary.

OKONITE TRADE MARK

THE OKONITE CO., Ltd.,
SOLE MANUFACTURERS OF
OKONITE WIRES, OKONITE TAPE, MANSON TAPE
CANDEE WEATHERPROOF WIRES.
253 Broadway. NEW YORK.

THE
CONLEY FOIL COMPANY
TIN FOIL
FOR ELECTRICAL APPARATUS
521 to 541 West 25th Street, NEW YORK

THE
Royal Trust Company
CHICAGO
Acts as Trustee for Bond Issues
WRITE FOR TERMS

CHAS. C. BULKLEY
PATENT LAWYER
Telephony a Specialty
1460 Monadnock CHICAGO

THE KENTS'
EXPRESS AND TEAMING CO.
HEAVY TEAMING A SPECIALTY
Phone Harrison 668 and 3713
225 South Canal St. CHICAGO

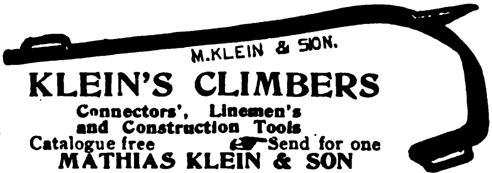

KLEIN'S CLIMBERS
Connectors', Linemen's and Construction Tools
Catalogue free ☞Send for one
MATHIAS KLEIN & SON
87-89 W. Van Buren St., Chicago, Ills.

Chicago Insulated Wire Co.
Factory: Sycamore, Ill.
Office: Lake and LaSalle Sts.,
CHICAGO, ILL.
Large stock constantly on hand of bare and insulated copper and iron wire, galvanized, strand, etc.

New York
Insulated Wire Co.
CHICAGO BRANCH
192 South Desplaines Street
CHICAGO, ILL.
Makers of All Kinds of Rubber Covered Wires and Cables.
Main Office: NEW YORK
Branches: BOSTON, SAN FRANCISCO, CHICAGO

Standard Underground Cable Co.
BARE WIRE, INSULATED WIRE, CABLES.
Wire Cables and Accessories for Telephone use, a specialty.
FOR PRICES AND INFORMATION, ADDRESS
PITTSBURG, Westinghouse Bldg. NEW YORK, 56 Liberty St. PHILADELPHIA, 1225 Betz Bldg. CHICAGO, 322 Rookery. SAN FRANCISCO, Mills Bldg. BOSTON, Tremont Bldg.
FACTORIES: Pittsburg, Pa., Oakland, Cal., Perth Amboy, N. J.
Please mention TELEPHONE MAGAZINE in writing to advertisers.

Telephone Magazine

Copyrighted, 1902, by Carl E. Kammeyer. Entered at the Chicago Postoffice as mail matter of the second class.

VOL. XX. CHICAGO, NOVEMBER, 1902. No 134.

THE NEWSPAPER AND THE TELEPHONE.

By Fred De Land.

There is said to be so interesting a similarity between the ratio of cost in the increasing circulation of a large daily paper and the ratio of cost in the operation and maintenance of a rapidly growing telephone exchange, that the editors of small papers might profitably cease attempting to show how fallacious is the argument of the telephone man that the greater number of subscribers the greater the number of calls per subscriber and the greater the relative cost of supplying telephone service per subscriber. Otherwise the small editor might be at a loss to intelligently and correctly explain whether the moment the circulation of a newspaper is forced beyond the normal proportions for which the local plant is designed to supply a particular field, the unit cost of production and delivery increases out of all proportion to the increase in income, just as in the operation of each and every telephone exchange there is a point where the normal load is maintained at a minimum of cost per unit.

There are other interesting similarities. A newspaper press which prints, folds and counts ninety-six thousand eight-page newspapers an hour is no novelty in New York city, where can also be seen rotary color and half-tone presses, capable of eleven separate printings of colors, and printing forty-eight thousand eight-page papers an hour. Yet, less than ten years ago, Mr. Dana told the students at Cornell that "the business of making newspapers is going through a revolution; it is passing through changes of a radical and remarkable nature. These changes are due, first, to the invention of new printing machinery, which makes it possible to publish the large edition, and the large newspapers that are seen around us. Before these machines were invented it was not possible to do this."

Now, after the same fashion, the telephone man can truthfully state that the new methods, the new type of equipment, the new forms of material, and the increased capacity of switchboards passing far beyond the 10,000 line limit, that were first introduced during the years 1890-94, revolutionized the business and made it possible for telephone companies to supply service to a far greater number of subscribers than was possible prior to that period, and that, too, at a marked decrease in the average rate paid by subscribers. For the average local telephone rate now paid by Bell subscribers is fully one-third less than was paid in 1893, though the number of subscribers has increased many-fold, with a corresponding increase in the value of the service. Then the Bell long-distance rates average about one-half what was charged in 1893. Of course the average rate paid by Independent subscribers is one-half to two-thirds less than the rate formerly charged by the Bell. But so marked a difference in rates is largely due to the fact that many Independent exchanges, like certain local newspapers, are maintained for convenience and glory, rather than for the filthy lucre that the Bell prefers.

It is claimed that Mr. Goddard within a period of five years "increased the sales of the Sunday *World* from two hundred to six hundred thousand copies. Then he left the *World* to take a similar position on the *Journal,* and in three years he had built up the circulation of its Sunday edition from one hundred to six hundred thousand copies." That is a remarkable record and worthy of the highest commendation. But a similar record has been made by Mr. Cutler in New York city, in the telephone field. At the beginning of the year 1897 there were only 16,786 telephone users in Manhattan and the Bronx,

while now the total number connected exceeds 85,000, and, it is said, will exceed 90,000 by the end of this year. The net yearly increase in telephone subscribers in Manhattan and the Bronx during the past three years has been 39 per cent.

Then it is claimed by some publishers that by reason of the enormous increase in the circulation of some of the metropolitan dailies, the amount now received from large advertisers in payment for space occupied is sometimes less than the actual cost of that portion of the white paper on which the advertisement is displayed, to say nothing of the cost of composition, press work, etc. The reason given for this unpleasant condition of affairs is that the rate paid by the advertiser for space in a morning paper was based on a far smaller circulation and before the heavy advance in the price of white paper. Again, some publishers claim that 'the Sunday edition makes about three-fourths of the total profits of a big newspaper. It sells for five cents, and its great size enables it to carry an enormous quantity of advertising, for which very high rates are charged."

After the same fashion it may be said that the telephone companies based the old flat rate on the maximum probable use that a given number of subscribers would make of the service. The introduction of improvements that permitted a greater number of subscribers to be handled under given conditions, resulted in an increase in the number of subscribers four, six and even ten-fold within less than ten years. Naturally, with the increase in the number of subscribers came a corresponding increase in the number of calls per subscriber, necessitating a large increase in the operating force per unit. Where this occurred, the telephone company soon perceived that the cost of supplying the amount of service utilized by the larger subscribers under this marvelous growth was exceeding the income derived from these users under the flat rate system.

Naturally, the greater the number of possible customers that the merchant can reach through his telephone door the greater the value of that service to him and to all the telephone-using public, just as the greater the circulation of a progressive daily paper among the desirable buying classes the more advantageous and valuable its columns are to the progressive advertiser. Again, just as more orders enter into certain establishments through the telephone door than ever came in through the door the architect planned, so more orders are obtained by certain firms through judicious advertising and received through the mails, than ever came over the counter.

Then, if the marvelous increase in the number of daily papers as well as in the unprecedented increase in circulation per issue during the past eight years, especially of the Sunday editions, is due largely to the introduction of mechanical composition "whereby one competent operator can accomplish the work of from five to ten compositors," and of giant presses turning out 96,000 papers an hour, so the introduction by telephone companies of metallic boards, common battery systems, party-line service and measured service rates has made possible a proportionately greater increase in the number of telephone subscribers. Of course, both in the business and the editorial management of the daily paper and in the general management of the telephone company brains, broader views, progressive ideas, up-to-date methods, more brains, increased technical knowledge and large capital, as well as still more brains, have each played an important part along with mechancial composition, improved presses, common battery systems and measured service rates.

To-day the man who is well-grounded in all that is essential to success in his profession is the man who is making his mark high up on the roll of journalists. The man with the broadly trained mind that enlarges with each new experience is revolutionizing the business of making profitable newspapers. It is these men, surrounded by "a small army of intellectual laborers, each appointed to his particular task, each pursuing his peculiar duty, and all combining to produce every morning that wonderful result which we call the modern newspaper," as Mr. Dana said, who have made possible phases of journalism not dreamed of twenty years ago.

So the men who are making their mark

Digitized by Google

in the telephone field are the men thoroughly grounded in all that appertains to telephony, men capable of solving the seemingly endless array of problems that govern the conditions affecting conversational traffic. And it is the successful handling of this traffic in conversations that forms the most interesting phase in telephone engineering. For, as Mr. Hibbard clearly explained in March, 1894, all other problems center around that of conversational traffic. "The stubborn fact which will not be downed appears to be that the *messages* constitute the business and that they must be studied very carefully in order to be properly provided for."

In the editorial rooms of a metropolitan daily "every minute is precious. Every man in the office is constantly on the jump. Minds are trained to work at railroad speed, to make instant decisions, and the wear and tear is frightful. The heaviest burden naturally falls upon those in authority."

After the same fashion every *second* as well as "every minute is precious" in a large telephone exchange. For the trained operator often completes the connection in less than three seconds. Then there is something far more effective than "hurry and confusion in the busy hours. It is the skill, the training and the discipline that nerves the operator to accomplish the seemingly impossible in the mad rush that represents a wild whirl in financial circles, a sensational fluctuation in the world of commerce, a frightful disaster, a destructive fire, or a storm that upsets all plans. Each and all of these causes mean to the operators in a telephone exchange all that "a scoop" of the most sensational character necessarily means to the editor stopping the presses to insert "fudge" that often is the highest proof of his ability, the loyalty and tireless energy of his reportorial staff. But in a telephone exchange the only indication of this increased pulsation in the outside world is seen in the rapid, dexterous and almost silent inserting and withdrawing of plugs as the voices swiftly but softly query: "Number?" and the increased watchfulness of the monitors ready to aid in equalizing the load. Yet the switchboard in a large exchange faithfully mirrors the ebb and flow in all local, commercial, financial, social and even in the criminal movements in a large city, that later may be detailed in the newspaper.

In his recent special report to the Census Bureau on "Printing and Publishing," Mr. Rossiter shows how "it is impossible to measure the effect of the invention of mechanical composition. If it were not for the entirely new situation which has been produced (i. e., corresponding in the telephone field to the introduction of the multiple board, party-line service, and the measured service rate, the will and the ability to expand the daily from the old-fashioned proportions might have struggled in vain against the high cost of hand-composition notwithstanding the mental activity of the period. So telephone men of marked ability, wide experience and broad foresight, as, for instance, Charles F. Cutler and U. N. Bethell, of New York city, W. D. Sargent, of Brooklyn, John G. Stoakes, of Pittsburg, A. S. Hibbard, of Chicago, and John I. Sabin and Louis Glass, of San Francisco, can tell how, since 1886, the aim of the practical leaders in the telephone fraternity has been and is and probably ever will be to place a telephone in every business house, office, factory, hotel and home; to completely telephonize each city, town and village in the United States, and then to connect each and all with ample trunking facilities, thus practically making all telephone users subscribers to one mighty exchange. The will and the purpose were there, just as it was in the heart of the publisher burning with a desire to find the way and the means to place his paper in the home of every possible reader in his field. Yet not till 1890-1893 were the way and the means made clear in the telephone field. But the moment the road was opened, money, technical skill, improved appliances and modern equipment, all were enlisted to bring about so desirable a condition. And what a large measure of success has attended these efforts is apparent in the brief statement that the net increase in the number of new Bell subscribers gained during the past five years has nearly equalled 35 per cent per year. That is, on December 31, 1897, practically twenty years after the first telephone ex-

Digitized by Google

change in the world was opened there were 384,230 Bell subscribers receiving service from 1,962 Bell exchanges and branch offices; while on December 31, 1901, there were 1,020,647 Bell telephone stations connected to 3,005 Bell exchanges and branch offices. In other words there was a total net gain in Bell subscribers during those five years of 636,417, or a net increase of 166 per cent in subscribers for that period, and of 1,043 new exchanges and branch offices, or a net increase of 53 per cent. Again, the magnitude of this increase in Bell telephone stations may be more apparent when it is stated that the net increase for the year 1900, was 167,934, and for the year 1901, 219,767. That is, in the two years ending December 31, 1901, there was a greater net gain in new telephone stations than the total number of telephone stations in service at the expiration of the twenty years ending December, 1897. In other words, *modern methods with measured-rate service and progressive ideas accomplished in two years what required twenty years to lay the foundation for with flat rates.*

Again, once the telephone habit takes hold of a community it is as difficult to stop securing readers for an enterprising, newsy and readable daily, as it is to stop applicants from insisting on the immediate installation of telephones. This means, in both cases, large increase in the capital investment with increased interest and other fixed charges. But the investment per unit is immeasurably many times greater in the telephone business than in the plant of a metropolitan daily equipped with all that modern methods make desirable. That is, it is assumed that a successful metropolitan newspaper might issue a daily edition of say 30,000 copies with a plant equipment representing an investment of say $3,000,000, in the city of New York. While to supply telephone service to the 90,00 subscribers in New York city proper (Manhattan and the Bronx) probably necessitates an average investment of at least $400 per subscriber, or a total cash investment of $36,000,000. In other words, it is assumed that an investment of $10 per unit or per copy would enable a live metropolitan newspaper to issue a daily edition of 300,000 copies, that is to deliver a copy to each of 30,000 subscribers; while to deliver telephone service to 90,00 subscribers requires an outlay of $400 per subscriber, or an investment in the ratio of as 40 to 1.

It may be said that there is a similarity in the broad field covered by a great metropolitan daily and by a comprehensive telephone service, for the newspaper reaches out to greet readers in every village, town and city; goes into the factory and the farm-house, the mines and the logging camps. So the telephone is fast linking together not only the places where people most do congregate but even the isolated camps, ranches and farm houses. And now through the Bell telephone at his elbow the editor of any one of the great dailies in Chicago or New York, Philadelphia or Boston, St. Paul or Pittsburg, is telephonically connected and can, if he so wills, talk to more than a million other subscribers connected to the same comprehensive telephone system. That is, his telephone is merely one station in a mighty system linking together cities and towns and villages in the effort to annihilate time and distance. Yet the reader of the Chicago Tribune, or of the New York Journal, or of any metropolitan daily finds himself for the moment in any of the great American cities, or, for that matter, in any part of the world For the metropolitan journals have, in a sense, narrowed the world to the confines of the reading-room. Time and distance have disappeared, and for the moment the reader is touching elbows with the natives of all countries and is in mental association with the citizens of all nations.

RED TAPE AND TELEGRAMS.

BY GEORGE CECIL.

(London.)

A man of some reputation for learning in days gone by, but who is now no longer with us, used to boast that there were only three things in the world that puzzled him sufficiently to keep him awake at night. Had, however, Solomon, for this was the name of the individual in question, been alive to-day, there is no doubt but that he would have found one or two other matters which would have had the same

Digitized by Google

effect upon him. Foremost among these would certainly have been the system on which the British postal authorities have drawn up their scale of charges for inland telegrams.

To unravel the mystery in which this is shrouded by those in power at St. Martin's le Grand is a task that would baffle the most brilliant intelligence that grappled with it. Compared, indeed, with such a test of ingenuity, the negotiating of the barbed-wire entanglements of the Boers in South Africa would be as simple as shelling peas. As a matter of fact, the very people who drew up the tariff which came into effect a few years ago have been compelled to acknowledge that they themselves are unable to offer any explanation as to the manner in which they went to work. Under these circumstances, then, there is little cause for wonder that the public is hopelessly in the dark.

With the mule-like obstinacy that has ever characterized them in the discharge of their duties towards the public, the postal authorities for a long time absolutely refused to take any notice whatever of the numerous complaints that were occasioned by their arbitrary methods of determining cost of telegrams. At last, however, fearful, apparently, lest some of the patronage accorded them should be withdrawn, they actually went the length of admitting that "difficulty was sometimes experienced in calculating such charges." A few months later a further point was yielded, and the big-wigs of St. Martin's so far unbent as to send a circular to all the sub-officers in the kingdom, intimating that the senders of telegrams were entitled, on application, to have the official method of counting words explained to them by the clerks in charge. Accompanying this notification was a list of what its compilers humorously described as "examples." From a perusal of the document embodying them, one is almost forced to the conclusion that it is intended merely as a practical joke. At any rate, it is difficult to regard those responsible for it as being animated by a genuine desire to simplify the estimating of telegraph charges when the following are included among its "examples":

A man wishes to use the term "bootmaker" on a telegraph form. He is, accordingly, charged a halfpenny for it. Should he, however, employ the term 'boiler-maker," he has to pay a penny. Similarly, St. Martin's le Grand rules that "pig-dealer" is one word, but that "fowl-dealer" shall be reckoned as two. Equally arbitrary and unintelligible in its methods is the department where figures are involved. Thus, while any group of five numerals is directed by the regulations to pass as one word, a simple figure followed by a letter, for example, "1 A," is authoritatively pronounced to be two. An even stranger decision than this, however, is the one that permits "twenty pence" to be counted as one word, but insists that "forty pence" are two words. Truly, the ways of Red Tape are passing strange.

Where names of persons and places are concerned, a similar degree of confusion pervades (what passes for) the official mind. For example, while "O'Gounan" is charged for as two words, "O'Neil" is telegraphed as one, as are also "MacDonald" and "De la Rue." In the same way, although "Little Brighton" is sent over the wires for a halfpenny, twice this amount has to be paid for performing the same operation for "Little Britain." A similarly subtle distinction is drawn between Herne Bay and Herne Hill, as is also the case with regard to West Derby and West Kensington. Among other anomalies of this nature contained in the "Postal Guide" are the following:

Counted as one word—Stock Exchange, St. Parietas, Newcastle-on-Tyne, St. Giles, Gunmaker, High Barnett.

Counted as two words—Royal Exchange, Bowerie-Tracy, Drury Lane, All Saints, Swordmaker, New Barnet.

This is the sort of thing one would expect in China, or the "Looking Glass Land" of Lewis Carroll.

Medina, N. Y.—The Co-operative Orleans County Telephone company, which is constructing lines through Northern Orleans among the rural residences and connecting the smaller villages, is now established between Lyndonville and Waterport. The movement is very popular among the farmers along the line.

Digitized by Google

WHAT CONSTITUTES A "HOUSE ORGAN"?*

There are many kinds of so-called "house organs," but most of them are so faint in tone as to be scarcely audible to the most acute hearing. Their owners evidently fear to disturb the quiet of their neighbors. In the Postal Laws and Regulations these "house organs" are called "advertising sheets." Observe that they are not dignified by the title of "newspaper" or "periodical," which alone are admissible to the second-class mails! The Department has been at some pains to define what constitutes an "advertising sheet," and has classified them as follows:

First. Those owned or controlled by one or several individuals or business concerns, and conducted as an auxiliary and essentially for the advancement of the main business or calling of those who own or control them.

Second. Those which, having few or no genuine or paid-up subscriptions, insert advertisements free, on the condition that the advertiser will pay for any number of papers which are sent to persons whose names are given to the publisher.

Third. Those which do advertising principally, and whose columns are filled with editorial puffs of firms or individuals who buy a certain number of copies for distribution.

Fourth. Publications containing market quotations, and the business cards of various business houses opposite the pages containing such quotations.

Fifth. Publications devoted largely to advertising and having a nominal list of bona fide subscribers, but whose circulation is mainly gratuitous.

Sixth. Publications which restrict advertisements to a single one in a given line of business to the exclusion of all competitors, or which contain price-lists or advertisements of certain business houses while refusing similar advertisements of competing houses.

The question whether a publication is "primarily designed for advertising purposes" is one fact, to be determined in each case from the evidence.

"The word 'primarily' is intended to indicate the chief or principal object of the publication, and not its first object in any sense of time. The use of the phrase, as applied to a publication, means one *principally intended for advertising purposes*, and, by fair inference, not one the design or intention of which is that it should be *used incidentally* for advertising purposes.

"The intention must be ascertained in each individual case. In ascertaining it, it is important to observe that such a publication 'must be originated and published for the dissemination of information of a public character, or devoted to literature, science, art, or some special industry,' and also have a 'legitimate list of subscribers.'

"The fact that it is devoted to literature, science, art, or some special industry, and that it has a legitimate list of subscribers, may exist, and yet it may be one 'designed primarily for advertising purposes.' If this be the case, it is not entitled to admission into the second class of mail matter." (Opinions of Attorney-General, Vol. 36, p. 303.) (Sec. 428, P. L. & R., 1902.)

This classification is not sufficiently comprehensive. In the first place it is very much to be regretted that no regulation has ever been made limiting the number of pages which may be devoted in a given issue to the advertising of some other line of business in which a publisher is engaged. The great Eastern magazines, with their enormous circulations, can not be considered as being primarily designed for advertising purposes, even though they contain numerous pages advertising the other books issued by their publisher. But the principle is wrong and should have been checked at the outset. What is right for one is obviously right for all, and the publisher whose business is in an embryonic state protests with justice that he has the right to take advantage of liberties accorded to his more prosperous competitors.

There should even be a limit to the advertising which may be accepted from one particular firm, for any one issue. I know a newspaper in this city which has an established reputation in its own line of business. Its every issue contains many pages advertising a certain firm. It is futile for its publisher to declare that he will admit the advertising of the competitors of that firm at his regular rates. He knows that they will not take space in his paper if made a present of it. The subscription list may be bona fide in all particulars and the subscribers may pay their money because of its genuine value, but the fact remains that that particular firm is deriving undue financial profit from the enterprise. This is a violation of the very essence of the law. When a man who is established in some line of business states that he is about to start a paper and wants second-class rates, we try to find out what his little game is, for

*Paper read by Mr. W. B. Getty, superintendent of second-class mail, Chicago postoffice, before the Chicago Trade Press Association, October 30, 1902.

Digitized by Google

such an incident invariably raises suspicion. Is it simply a "fad"? Is it inspired by a genuine taste for journalism, the indulgence of which has been postponed until experience seemed to insure its success? Or is it simply a method of holding customers for his other business? Frequently a close examination of the subscription orders will tell the tale. Sometimes, however, these bear all the earmarks of legitimacy.

Several months ago there came to the office the representative of a prominent dry-goods merchant. The firm had for years issued a sheet made up of local items and the merchant's price-list. We were informed that there was a large paid subscription list. Were the advertisements of competitors to be admitted at the regular rates? "Yes, if they will come in, but we reserve the right to use more space than they." It was proposed to make the sheet a regular weekly newspaper and to engage an experienced editor who had no connection whatever with the business. Even the title, in which had been included the proprietor's name, was to be changed. And much indignation was expressed when the gentleman was told that under no circumstances could the postmaster be asked to recommend its acceptance. You see, such a paper would never be free from the taint of suspicion, and all the original subscribers had paid for an advertising sheet!

The spirit of the law is violated by a publisher who accepts subscriptions from an advertiser, even though the individuals have paid the price. And we have to exercise just as much care in the cases of publications which are usually conducted in a perfectly legitimate manner, for a certain issue may be of such a character as to be rightfully termed an advertising sheet.

It is impossible for the Postoffice to trace the devious ways of some publishers. There are innumerable methods of circumventing this phase of the law and many of these should be far more apparent to you than to us. It is right here that your association can be of the most valuable aid to us. *If competition is the life of legitimate trade, it should also be the death of illegitimate trade.* The Postoffice Department is most earnest in its endeavor to uproot all the weeds and thereby make the field more fertile to the law-abiding publisher. Only recently one of your members, whose help and courage one can not too highly appreciate, has made definite charges in writing to the Department. If it can be rightfully charged that any publications in Chicago are receiving the second-class privileges which are not rightfully entitled thereto, they will forfeit those privileges, provided that the charges are specific and can be substantiated. There may be instances where information furnished must be confidential. In such instances, the trust will be strictly kept.

A NEW LAW NECESSARY.

It is my belief that the Act of March 3, 1879, under which your publications are now passing through the mails, is inadequate to present conditions. I become more convinced every day that our progress and yours is hampered by innumerable barnacles in the shape of regulations. These regulations are the natural outgrowth of a variety of opinions concerning the intent of the Act. Now, since the men who framed that Act could not possibly have foreseen some of the conditions that would exist in the American press world twenty-three years after that time, it is impossible to apply its provisions to those conditions. Publishers who had given any thought to this question—and I am sorry to say that the great importance of the subject does not receive the consideration it deserves, the apathy of the daily press being particularly marked, will understand what I mean when I say that many of the regulations which apply to trade papers can not be applied to the daily press, and that the circumstances connected with the religious press are totally different to those which obtain in the case of live-stock journals or mail-order papers, and so on.

For this reason I am much in favor of a new Act that will classify the American papers. I do not mean that there should be a different rate of postage for each class or for any two classes. I would give all the same rate. But the phraseology of the Act should be so precise and unmistakable that there will be no need of departmental regulations, and the various

Digitized by Google

clauses of the Act should apply to those papers only to which they are actually germane. The introductory, so to speak, of the Act should simply define certain provisions which shall govern all second-class matter. Do not mistake me as disparaging the present law. There is much in it that is admirable and that should be retained, and as long as it is the law the Chicago Postoffice will enforce its provisions. I am alluding to the regulations regarding advertising inserts, supplements, marked copies, bulk subscriptions, extra issues, and the hundred and one details to which the Act of March 3, 1879, made absolutely no allusion, and to fit which government officials have been sorely taxed to invent rules in harmony with the spirit of the Act. It seems to me that enlightened America should rid its laws of useless encumbrances.

Chicago should lead in this movement, and the Chicago Trade Press Association should start the ball. It is my belief that a committee of your members and a representative of each class of paper in America could send to Congress a bill that would bring about a most satisfactory condition.

THE INTERNATIONAL CONFERENCE ON WIRELESS TELEGRAPHY.

The Berlin correspondent of the *Standard* states, "on good authority," that the International Conference on Wireless Telegraphy will take place in Berlin about the end of next March or the beginning of April. England, the United States, France, Austria-Hungary, Italy and Russia have responded to the initiative of Germany in the most friendly spirit, and the majority of these States have now intimated to the Berlin government that they will accept an invitation to such a conference on condition that the programme is fixed beforehand and sent with the invitation. The circumstance that England's official assent to the conference has not yet reached Berlin is mainly attributed to the rather difficult position in which she has been involved by the contract concluded between Lloyd's and the Marconi Company. It is, however, confidently hoped that England will send delegates to the conference, "not only because most of the naval stations are in her possession, but also," says our contemporary, "because it is believed that Sign r Marconi's acquiescence in the decisions of the conference will greatly promote the future development of wireless telegraphy.—*The Electrician,* London.

NEW WIRELESS TELEGRAPH SYSTEM.

The interesting announcement was made in the early part of this week that the Eastern Telegraph Company has entered into an agreement with Mr. Nevil Maskelyne, son of the veteran Egyptian Hall entertainer, for a trial of a system of wireless telegraphy which Mr. Maskelyne claims to have invented. It was stated that the arrangement provides for the equipment of all the cable ships owned by the Eastern Telegraph Company with the new system. Enquiries at the offices of the company, however, have elicited the fact that the agreement has been arrived at merely from an experimental standpoint, and that an installation is to be set up at a point near Land's End. Two of the company's cable ships now lying in the Thames are also to be fitted with Mr. Maskelyne's apparatus, and the experiments are to take place as soon as weather conditions permit. In spite of Mr. Maskelyne's assertion that his system is superior to that which Mr. Marconi is now engaged in perfecting, the former assigns 50 miles as the practical limit for communication by wireless telegraphy. The principal improvements claimed to have been effected in the new system consist, according to the inventor, in the removal of the necessity for the vertical wire in the Marconi system and in the greater sensitiveness of the coherer.—*The Electrical Engineer,* London.

Scottsboro, Ala.—A company has been formed at this place to build a telephone line from Scottsboro to Tupelo, Ala. The poles have been distributed and are ready to be put up. The company is composed of several prominent men of Scottsboro and Tupelo. The company will connect with the Cumberland at this place, and will use the central office of the Cumberland.

Digitized by Google

THE INTERSTATE TELEPHONE CONVENTION.

The annual meeting of the Interstate Independent Telephone Association will be held at the Auditorium, Chicago, December 9, 10 and 11. The committee of arrangements has selected the Auditorium Hotel as convention headquarters, and has secured special hotel rates for convention delegates.

The Sherman House convention of this Association, held in Chicago in April, will undoubtedly be surpassed both in attendance and importance. The manufacturers, jobbers, etc., of Chicago and vicinity are contributing to an entertainment fund, which is already larger than any fund ever raised for a telephone convention. It is expected that from $5,000 to $6,000 will be expended by the entertainment committee during the three days of the convention. A number of enjoyable features are under consideration, but the final details have not yet been fixed.

The Manufacturers' Association held a meeting on October 20th, and perfected arrangements for entertaining the delegates. The manufacturers will tender a banquet on the evening of December 11, at which they expect to entertain 1,000 or more guests.

Arrangements have been made with the railroad companies for reduced rates to any one attending the convention from the nine states embraced in the Association. The secretary, E. M. Coleman, is preparing a very handsome notice or invitation, including the program of the convention, which will be sent to all interested in the nine states.

The total attendance at the convention will probably be in excess of 1,000 and in every way the convention will be the most representative gathering of Independent telephone men ever held in the United States.

The executive committee of the Association has arranged the program of the convention sessions in such a manner as to secure practical papers on matters vitally interesting to Independents. The meeting is designed to be a clearing house of Independent ideas in the Interstate territory, and the fullest opportunity will be given for discussion on all the subjects which are to come before the convention.

The future of the Interstate Independent Telephone Association is bright with prospects for good. It is a thoroughly independent, vigorous, energetic association, but it is not what it will be later on. Every Independent company in the territory of the Association should have a representative at the convention. Independents should be acquainted with each other and with each other's needs and plans; conventions are the meeting-places for ideas. Independents should be friends—yes, even brothers; conventions are the home-comings of all the big Independent family.

Following is the three days'

Program:

TUESDAY MORNING, DEC. 9TH, 1902.

Reception to members and friends by the executive committee at the secretary's headquarters and inspection of manufacturers' exhibit.

TUESDAY AFTERNOON, 2 O'CLOCK.

Address of Welcome—H. S. Taylor, prosecuting attorney, Chicago.

Response—President H. C. Raney, Fairfield, Iowa.

Report of Executive Committee.

Report of the Secretary.

Report of the Treasurer.

Selection of Nominating Committee by the States to report on call of the President.

WEDNESDAY MORNING, DEC. 10TH.

Rates.

Measured Service—George N. Bandy, Perry, Ia.

Sliding Scale Rates for Exchanges—Dr. H. S. Herr, Ottumwa, Ia.

Toll Rates—H. H. Robinson, Cleveland, O.

Discussion.

Restrictions by Municipal Authority, Synopsis of the Law:

Ohio—W. F. Laubach, Akron, O.

Iowa—U. S. Alderman, Nevada, Ia.

Wisconsin—J. C. Harper, Madison, Wis.

Minnesota—E. E. Webster, Minneapolis, Minn.

Michigan—J. B. Ware, Detroit, Mich.

Indiana—E. W. Pickhardt, Huntingburg, Ind.

Digitized by Google

Illinois—M. Savage, Champaign, Ill.

Missouri—H. Linton Reber, St. Louis, Mo.

Kentucky—D. E. Pendelton, Winchester, Ky.

Discussion.

WEDNESDAY AFTERNOON, 2 O'CLOCK.

Paper—Settlement of Toll Business Between Connecting Companies. By A. L. Hutchison, Weyanwega, Wis.

Paper—Enforcement of Message Time Limit. By H. E. Ralston, Maitland, Mo.

Discussion.

THURSDAY MORNING, DEC. 11TH.

Papers—Independent Telephone Securities as an Investment.

(a) From a Banker's Standpoint. By Col. J. D. Powers, Louisville, Ky.

(b) From Small Investor's Standpoint. By J. H. Lane, Carthage, Mo.

Discussion.

THURSDAY AFTERNOON, 2 O'CLOCK.

Paper—The Berliner Patent; Bell's Claims of Infringement and Litigation Now Pending. By J. J. Nate, Chicago, Ill.

Paper—Suggested Methods for Improving Long Distance Telephony. By Senator C. E. Hull, Salem, Ill.

TELEPHONE PROGRESS IN THE NORTHWEST.

In few, if any, quarters of the globe has the telephone made swifter progress in recent years than in the Northwest. In population, Minneapolis, according to the late census, stands nineteenth among American cities; but in number of telephones in service, according to a report recently prepared by City Electrician Ellicott of Chicago, Minneapolis stands ninth. The subscribers of the Northwestern Telephone Exchange company in Minnesota and the two Dakotas have increased from 4,980 in 1895 to 21,616 in 1902, and the miles of wire have grown during the same seven-year period from 9,022 miles to 55,258—a growth of 332 per cent in number of subscribers and of 513 per cent in miles of telephone wiring since 1895.

Within the corporate limits of Minneapolis alone there are now more than 10,000 telephones in service.

The following table brings out in detail the number of subscribers, miles of poles and miles of wires of the Northwestern Telephone Exchange company within its territory in Minnesota, North and South Dakota, on January 1 of the past eight years:

On Jan. 1.	Subscribers.	Miles of poles.	Miles of wire.
1895	4,980	722	9,022
1896	5,514	1,266	11,114
1897	6,056	1,611	14,271
1898	6,732	2,128	17,365
1899	8,396	3,460	26,387
1900	15,551	4,021.5	36,756
1901	19,358	4,126	51,610.5
1902	21,616	4,126.3	55,258.4

The striking fact is that although the Northwestern company was established in 1880, its most phenomenal growth has been during the past three years. On Jan. 1, 1902, the subscribers numbered 21,616, as compared with 8,396 on Jan. 1, 1899—a net increase of 13,220, or 157 per cent, in the brief period of three years. Miles of wire have more than doubled in three years, trebled in four years, and nearly quadrupled in five years. The increase in mileage of poles for long distance service during the past three years has been nearly offset by the change from poles to underground construction for city service. The company's progress in underground construction in Minneapolis is shown by the advance from 10,870 feet of duct in 1890 to 251,321 in 1895 and 690,005 in 1902. Miles of Minneapolis underground wire were 1,898 in 1895, 7,197 in 1900 and 13,263 miles, or 60 per cent of its Minneapolis total, in 1902. In other words, the miles of underground wire laid by the company in Minneapolis have nearly doubled in two years and have multiplied seven-fold in seven years.

As a matter of natural consequence, the cost of the service to the company has increased. Unlike most other business enterprises, the cost of telephone service increases with the extension of the enterprise—it increases with the number of telephones and miles of wire operated. Each new telephone added necessitates a multiple connection on the switchboard, that all other 'phones may talk with the new

Digitized by Google

user, and each addition of 50 to 100 new 'phones calls for an extra operator. At the same time, each added 'phone increases the average service of all the 'phones in the system by increasing the average number of messages transmitted, and this again decreases the number of 'phones which an operator can answer. Cost of construction, maintenance and operation all increase the average cost of the service to the company, per telephone and per message with each and every extension of the telephone plant, at the same time that they increase the value of service to the patron. If the 500 patrons of a 500-'phone plant exercise the privilege of talking once with each other, there are 250,000 messages transmitted; but if the 1,000 patrons of a 1,000-'phone plant do likewise, there are 1,000,000 messages involved—that is to say, four times as many messages for the plant only twice as large.

"NORTHWESTERN" INVESTMENT AND EARNINGS.

By reason of the large risk and heavy outlay for maintenance, depreciation and new construction in the telephone business, investors reasonably look for larger dividends in telephone enterprises than in other investments. Notwithstanding this fact, the Northwestern Telephone Exchange company has never paid over 5 per cent, more commonly 4 per cent, and in some years no dividend at all. The company has invested in its Minnesota and Dakota system upwards of $5,000,000 in plant, fixtures and real estate. Of this about $1,800,000 is invested in Minneapolis, $1,200,000 in St. Paul, and $2,000,000 in about 2,000 lesser stations and connections. The requirements for maintenance—that is for repairs and reconstruction to keep the plant up to a high standard of service and abreast of the latest demands of science and invention—necessitates the heavy outlay of 35 per cent of the gross receipts. Such expenditure is required in no other lines of business enterprise.

During the past five years the number of subscribers to the Northwestern Telephone Exchange company has practically trebled, while the miles of wire required to render service has practically quadrupled.

The heavy increase, therefore, in recent years has been in reaching smaller patrons, and the outlay for construction and operation has been largely increased in proportion to the revenue received. This accounts for the moderate dividends realized. All of which shows that the public patron has been the larger gainer through the extension of this progressive enterprise, rather than the investor and management.

NEW TELEPHONE COMPANY FOR MICHIGAN.

It is now an assured fact that the Kibbie Telephone company will soon have a line running into Kalamazoo. The matter has not been definitely acted on by the city council but at the meeting Monday evening the request for permission to come into the city was referred to the street and bridge committee, the city attorney and city engineer.

According to the plans which were outlined before the council by Judge A. J. Mills, the company proposes coming into the city on the road running over the mile hill. The wires will be on side streets to a place near the corner of East Main and Edwards streets. According to the state law, the company is not obliged to get a franchise from the city but they are willing to take one if the council so desires. The Bell company is not operating under a franchise but in the past there have been two such ordinances passed. The old independent company operated under one of them.

John H. Tripp, secretary of the company, was present. The company has lines reaching every town in Van Buren county with the exception of one, and is also extended into part of Allegan county. Through contracts with other independent companies it has access to about 1,500 'phones, 700 of them being on its own lines. The company has been operating in Van Buren county for several years and is justly popular wherever it has been extended. Those having instruments belonging to the company are able to talk with several of the larger cities of the state.

Digitized by Google

It is not the intention to work for local business in this city, although some 15 subscribers here have agreed to place 'phones. The probable rate will be $24 a year to subscribers here. Mr. Tripp announces that the lines have already been extended to Alamo and that will only take a few weeks to bring them into the city.—*News,* Kalamazoo, Mich.

TELEPHONE COMPANY PAYS.

The jury in the case of Frank Mizer against the Central District & Printing Telephone Co. returned a verdict for $7,000 damages in favor of the plaintiff in the United States district court at Cleveland Friday afternoon. Attorneys Austin Lynch and David B. Day of Canton, and W. L. Tandley of Canton represented Mizer. The company was represented by Attorneys Guilbert, Hills & Vandevere of Cleveland and Attorney Challoner of Pittsburg.

Mizer's home is in Carrollton. In the spring of 1901 Mizer was in the employ of the defendant company at Latrobe, Pa.

THE TELEPHONE.

Of all modern inventions none is more notable than the telephone, and from the standpoint of what had been considered possible before, no feature of telephone development is more notable than its use over wires laid at the bottom of the ocean. Early in November the longest submarine telephone line in the world will be opened between England and Belgium. The principal part of the cable has already been laid, terminating on the English side in St. Margaret's bay, near Dover, and on the Belgian side in the little harbor of La Panne. The length of the cable is sixty-three miles; it is on the double circuit plan, and cost about $5,000,000, while its complete installation will take nearly twice as much. The entire enterprise was conceived and has been carried through by the general postoffice of London. Its distinct advantage over the other lines between the continent and England is that, through the Anglo-Belgian communication, telephone subscribers all over Belgium will be able to speak from their homes with subscribers in any part of England. The expense of maintaining the new line will be equally borne by the governments of England and Belgium. If this enterprise is a success, as it probably will be, the same system will undoubtedly be extended to larger undertakings, and it is probable that at no distant day we may have submarine telephone wires from this country to Europe, and people may be able to talk across the Atlantic as they now send telegraph messages across it.—*Indianapolis* (Ind.) *Sentinel.*

AN INTERESTING "WIRELESS" INSTALLATION.

It will probably not be generally known that at the present time there is in actual operation a wireless telegraph installation within the metropolitan area. It is to be found in the suburban seclusiveness of Streatham, and is used by the London County Council as a means of communication between the street fire station at Streatham green and the temporary substation in Mitcham-lane. For rather more than two years now the apparatus has been at work, but few of those, even residents of the neighborhood, who read in the papers of the great achievements of wireless telegraphy abroad, knew of the installation which was operating in their midst. To the uninitiated, the "clicking" sounds which emanated from the street station when messages were being transmitted or received were of little or no consequence and excited no interest. The distance covered by this installation is very short—perhaps 100 yards or so—but in the two years it has been up it has done yeoman service, resulting in the saving of time in the turning out of appliances at the temporary sub-station. The instruments are supplied by Marconi's Wireless Telegraph Company, under an agreement with the London County Council, and the arrangement has just been extended for another year—until September next—when it is expected the permanent fire station in Mitcham-lane will be completed.—*The Electrical Engineer,* London.

Wilkes, Tenn.—The Wilkes Telephone and Electric company has just completed a line of long-distance telephone, connecting Washington with the smaller towns in the country.

Digitized by Google

Telephone Magazine

An Independent Illustrated Journal

Entered at the Chicago Postoffice as mail matter of the second class.

Copyrighted, 1902, by Telephone Magazine Publishing Co.

PUBLISHED MONTHLY BY

The Telephone Magazine Publishing Co.

JNO. R. DARE, President.

Medinah Temple, - Chicago, U. S. A

TEL. HAR. 4148.

C. E. KAMMEYER, Editor.

LONDON: 2 Exeter St., Strand, London: W. C.

CHICAGO, NOVEMBER, 1902,

Subscription Rates.

One Dollar per annum in advance; fifty cents for six months in advance; sample copies ten cents each

Subscriptions may be sent by express, draft, money order or registered letter. We cannot use checks on local banks unless exchange is added; send draft on New York or Chicago. Make all remittances free of exchange, and payable to Telephone Magazine Publishing Co. Currency forwarded in unregistered letters will be at sender's risk.

Advertising Rates

Made known on application. The value of The Telephone Magazine as an advertising medium is unquestioned. The character of the advertisements now in its columns tell the whole story. Advertisements, to secure insertion in the issue of any month, should reach this office not later tnan the fifth of the current month.

CORRESPONDENCE.

Readers of The Telephone Magazine are cordially invited to send items relating to telephony or any of its branches, and the cooperation of telephonic thinkers and workers is earnestly desired. Clear, concise, well written articles are especially welcome and communications, news, news items, local newspaper clippings or any information likely to interest those in the telephone field will be thankfully received and cheerfully acknowledged.

TALKS AND CROSS TALKS.

Beginning in the December number of the TELEPHONE MAGAZINE a department under the above title will again be one of its many good features. An experienced and well known electrical and telephone engineer has been engaged as the "Inspector." Exchange managers, construction men, inspectors, linemen, repairers or anyone engaged or interested in telephony are invited to send in their troubles, no matter how difficult, and they will be promptly answered in the next issue. Always send sketch or diagram where necessary.

Address, "THE INSPECTOR," care TELEPHONE MAGAZINE.

FREIGHT SERVICE AND TELEPHONE SERVICE.

A captious railway official endeavored to convince a telephone manager that there should be a marked decrease in telephone rates because his road was carrying frieght at rates 30 per cent less than was charged fifteen years ago. The telephone manager led the railway official to momentarily drop the subject of telephone rates and to boast about "our new locomotives" which haul 70 loaded freight cars, while the heaviest freight engines employed fifteen years ago could only haul 35 to 40 loaded cars. Moreover, while the freight cars formerly used had a holding capacity of from 15 to 20 tons, the freight cars now received carry from 40 to 50 tons. Yet practically the same number of men constitute the train crew. In other words, though employing no increase in manual labor, "our trains" were carrying 300 per cent more freight than was carried fifteen years ago, and "we have generously reduced the rates 30 per cent to our patrons."

Then the telephone manager took a turn at talking and showed how the railway company was paying exactly the same rate for telephone service with 912 subscribers and free interchange of service with three neighboring exchanges, that it paid when there were only 127 subscribers and no free toll service. In other words, it was enjoying a service

Digitized by Google

seven times as comprehensive, with no increase in rates.

But the essential point comes in right here. To supply service to 127 subscribers, it was only necessary to employ two operators and one lineman, while a manager served as collector, bookkeeper, etc. With 912 subscribers connected to a new switchboard, fourteen operators, one wire chief, two linemen, three inspectors, one collector and a manager are required.

That is, the railroad company has increased capacity and efficiency till it can haul a load seven times greater and receives five times the income formerly obtained for the same manual labor employed. While the telephone company has also increased both the scope and the value of its service more than seven-fold, but in so doing has been compelled to also increase the number of its employes more than seven-fold, yet charges no more for its service than it did when "our railway company" first became a subscriber. In other words, the telephone patron receives a seven-fold more valuable service without any increase in rates, and with no increase in profit to the telephone company.

FRAUDULENT ORDERS.

By the recent decision of Judge Brooke a fraudulent certification of a check by a bank is no certification at all. That is, any bank can certify a check and incur no financial liability if the customer's account was overdrawn and there are no funds to meet payment with. This brings up the question whether an order for material or equipment would hold in the courts, if the company receiving the goods claimed that it was fraudulently issued. Rarely does the selling agent secure the certificate of the board of directors that the general manager has full authority to place the orders in question, or that the board will honor draft covering purchases to a given amount. But unless such a certificate is obtained what is to hinder the company from repudiating the transaction, under the recent decision, on the plea that it was fraudulent? And if this can be done, selling agents will have to exercise further care to observe that the by-laws show that the stockholders conferred the necessary power on the board of directors to render their action valid and binding.

HAS A COMPANY THAT RIGHT?

In its advertisement a Maryland Independent telephone company claims that "under a recent decision of the Supreme Court of the United States, no amendment of the ordinance under which it is operating is necessary to empower it to increase its rates for the kind of a telephone equipment and facilities which it is now furnishing its subscribers." Then, after explaining its position, the company adds that if it is "restricted to the rates named in the ordinance, irrespective of the kind of equipment or amount of service rendered, the company would be obliged to charge the business man of very limited means or the small store-keeper who must have a telephone in order to be reached by his customers, the same rate as a bank, a railroad or a large business house, making the small user help to pay for the 'phone of his more fortunate competitor."

Now that is practically the same argument that the Chicago Telephone company, a Bell licensee, used in defending the suit brought by the Illinois Manufacturers' association. Hence it will be interesting to learn how the Illinois courts will view this alleged decision of the Supreme Court. If the Maryland company's contention is right, then the Chicago ruling may be reversed. But if the Maryland company has not thoroughly digested the opinion of the Supreme Court, then it may find its subscribers entering suit

Digitized by Google

to recover the unauthorized increase in rates, even though the subscribers enter no protest at the time payment is made. For, as Judge Tuley stated: "The law does not require objection or protest to be made to the payment of unjust charges for the reason that it would be in vain, being addressed to those who occupy the commanding power to enforce obedience to their requirements."

In any event, it may afford some amusement to see rival companies using each other's arguments to strengthen their positions before the courts.

KANSAS ALWAYS WAS A COR KER.

Kansas is nowhere unless she is noisy, and she has never been known to let such trifles as cold facts or the truth interfere with her desire for spectacular display. But as she is busily engaged in racking her brain for reasons why she should not journey to points within the jurisdiction of the courts of Pennsylvania, further pyrotechnical displays may be deferred for some time to come. Moreover, before Kansas goes gunning again, not only will she fully investigate who paid for the fire-works that she was cajoled into exploding, but she will thoughtfully consider the advice John Graham gave to his son Pierrepont: "First and last, a good many men have gone gunning for me, but they've always planned the obsequies before they caught the deceased. I reckon there hasn't been a time in twenty years when there wasn't a nice 'Gates Ajar' piece all made up and ready for me in some office near the Board of Trade. But the first essential of a quiet funeral is a willing corpse. And I'm still sitting up and taking nourishment."

Kansas held the funeral before she caught the corpse, and now is endeavoring to explain that she didn't know the gun had a back-action movement. Nevertheless, it must aggravate her inner consciousness every time she recalls that it was not her own ability to stir up trouble that led her into such an ugly mess, but the ambition of a man from Iowa who, hobo-like, vainly boasts that "I have been 'busted' to all intents and purposes ever since I went into the telephone business."

PERSONAL.

The many friends of Mr. F. L. Martin, who for a year and a half held the position of advertising manager with the Kellogg Switchboard and Supply Company, will be pleased to learn that this gentleman has accepted an equally important position with the Stromberg-Carlson Telephone Manufacturing Company, Rochester, N. Y., and Chicago, Ill. During his connection with the former company Mr. Martin's efforts in preparing copy for advertising were very successful, and in his new position his work will no doubt be fully as perfect. The best wishes of the TELEPHONE MAGAZINE follow Mr. Martin in his new sphere.

LITERARY NOTE.

A Magazine Thirty Years Old:—The Christmas, (December,) Number of The Delineator Is Also the Thirtieth Number.

To do justice to this number, which for beauty and utility touches the highest mark, it would be necessary to print the entire list of contents. It is sufficient to state that in it the best modern writers and artists are generously represented. The book contains over 230 pages, with 34 full-page illustrations, of which 20 are in two or more colors. The magnitude of this December number, for which 728 tons of paper and six tons of ink have been used, may be understood from the fact that 91 presses running 14 hours a day, have been required to print it; the binding alone of the edition of 915,000 copies representing over 20,000,000 sections which had to be gathered individually by human hands.

* * *

Letcher, S. D.—Letcher Telephone company has been incorporated; capital, $10,000; incorporators, William D. Ryan, Edward Welch, Edward Menaugh.

Digitized by Google

AUTOMATIC ELECTRIC COMPANY.

The removal of the Automatic Electric Company to its new building, corner of Morgan and Van Buren streets, Chicago, and the large contracts recently given the company by the Independent Telephone companies in the cities of Dayton and Columbus, Ohio, for the equipment of automatic exchanges, in those cities, each

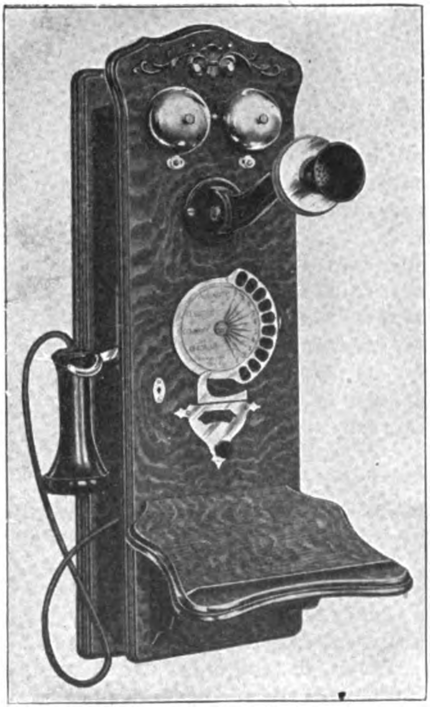

Fig. 1.

of which will have an ultimate capacity of 19,000 stations, intensifies the interest in the future of the automatic telephone and switchboard.

The new factory of the company is a large six story building of modern construction which has been equipped throughout with the highest types of power presses, screw, milling, drill and tool machines, and other appliances. Eight hundred operatives will be employed and the output will be more than three hundred telephones and a corresponding number of switches per day.

We reproduce in this issue some illustrations of the automatic telephone and switch. Figs. 1 and 2 show the standard wall telephone. No. 2 shows it in operation, the receiver removed from the hook, and the hand revolving the dial with the finger in hole No. 5. It will be noticed that this dial has ten finger holes on the right which are numbered from 1 to 0. The dial revolves, and any combination of figures can be made to form any number desired. In making a call, the dial is revolved until the finger reaches the stop which is shown just below the dial, when it is released and is at once restored by a spring to its normal position. In calling a number, say, 876, the dial is revolved by placing the finger in No. 8, then in No. 7, then in No. 6, and each time pressing downward to the left. The button just

Fig. 2.

below the finger stop is then pressed and rings the bell of the subscriber wanted. Such a call can easily be made and the bell rung in five seconds.

Fig. 3 shows the new desk telephone which the company is bringing out. It is a handsomely nickeled instrument, of elegant design, and weighs only five and one half pounds.

The front and side views of the switch

Digitized by Google

are shown in Figs. 4 and 5. This automatic operator is an instrument 13 inches in height, 4½ inches in breadth, and 4 inches in depth, the lower portion of which is made up of contact banks, of semicircular formation, the axis of which is a vertical rod on which, and at right angles, is mounted a contact arm which forms a wiping contact with the bank contacts. The upper portion of the switch

Fig. 4.

consists of six relays which control the selective rod; lifting it to the desired row of contacts, and revolving it until the contact arm forms a contact with the proper point in the row. Thus, when No. 25 is called, the arm is lifted to the second row of contacts and revolved until it reaches the fifth contact in that row. When the exchange has more than 100 stations a percentage of trunk switches are used to select the group in which the desired telephone is located and connect with same. For instance, in calling No. 876, the first movement of the dial connects with one of these trunk switches leading to the eighth group of hundreds, while the next two movements select and connect with No. 76 in that group.

The company claims that the features which should commend the automatic system to the investor and subscriber are as follows:

1st—The life of the apparatus is longer than that of any manual apparatus which has ever been built.

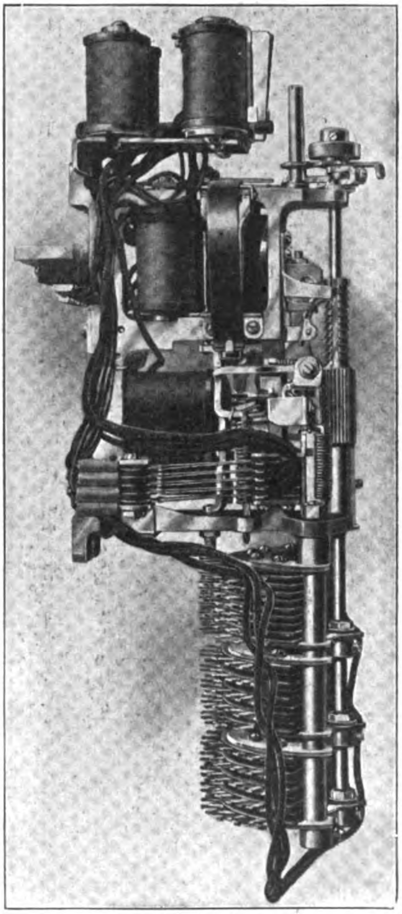

Fig. 3.

2nd—A private wire and secret service is given to each subscriber.

3rd—Connections, disconnections and busy signals are instantaneous and accurate to an extent which no manual exchange can possibly equal.

4th—Interruptions of a conversation are absolutely impossible.

5th—Exchange troubles are largely decreased.

6th—Dispensing with the operator decreases the fixed charges of operating an exchange; such as operator hire, lights, fuel and operator accommodations, and enables the exchange to pay a much greater dividend to its stockholders.

Digitized by Google

7th—The automatic telephone is always more popular with the public than the manual, because it saves time to the sub-

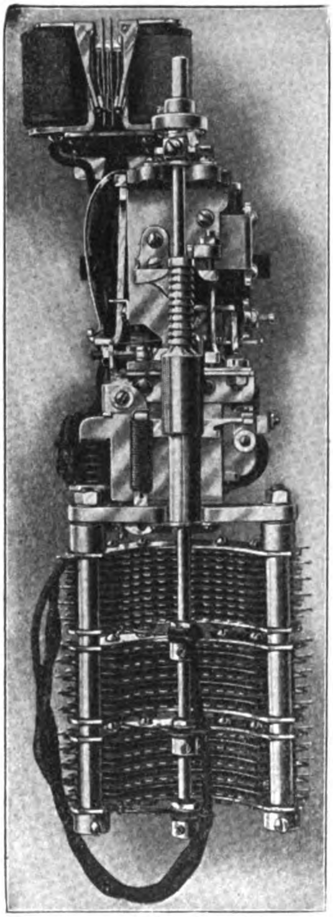

Fig. 5.

scriber and rids him of a great many annoyances and delays of which the manual board has proven itself so prolific.

STROMBERG-CARLSON MINE RAILWAY TELEPHONE SET.

A mine and railway telephone set, which is especially intended to meet the conditions of both bad weather and severe usage, is shown by Figs. 3 and 4. This outfit is made by the Stromberg-Carlson Telephone Manufacturing Company, Chicago. The iron box which protects the telephone proper is claimed to be absolutely water tight and weather-proof. The ringers are mounted in the upper part of the box, with an opening at each side, so that the call may be heard at some distance from the telephone. These openings are so arranged that the apparatus is protected not only from the weather, but also from mechanical injury, due to a mischievous desire on the part of anyone to insert sticks through the opening or to meddle otherwise. The talking and calling apparatus is located in the lower

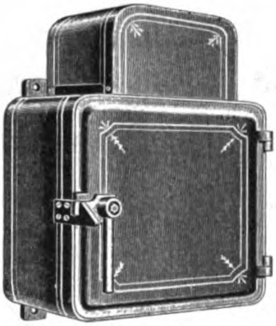

Fig. 3.

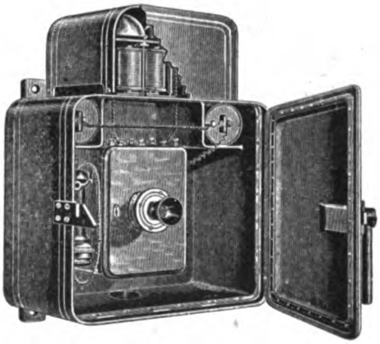

Fig. 4.

portion of the box and particularly arranged to suit the purposes for which the telephone is supplied. In mines and in bridged railway telephone service a wooden box contains all of the apparatus. Ample space is provided in the outer box for the removal of the receiver and the turning of the crank. Where the apparatus is mounted for police-signal and fire-alarm work, the usual arrangement of mounting the parts separately is carried out. The cover of this box fits tightly over a rubber gasket and when the door is closed the box is air tight and may be placed in exposed locations with impunity. Four-inch gongs are employed; experience having demonstrated that bells of this size can be heard at a sufficiently great distance for all practical purposes.

Digitized by Google

TRUSTS MUST ADVERTISE.

Not all persons who have watched the rise and decline of the "bicycle craze" will agree with Colonel Pope in his contention that the bicycle could be restored to its former popularity or that the yearly output of wheels could be brought to the high-water mark of five years ago through a resumption of the extended and liberal advertising campaigns which marked the wonderful development of this industry.

At the same time, there is little doubt that publicity would go far toward retrieving the losses incident to the formation of the bicycle trust, in which the individuality of each particular make of wheel gradually disappeared from public view and the appropriations for advertising were naturally curtailed.

The bicycle has become a utilitarian vehicle in every city and town where the street pavements will permit of its use. One only needs to visit such cities as Washington and Buffalo, where asphalt paving prevails, to fully realize this fact. That the bicycle is the swiftest, most convenient and economical vehicle for transit over short distances ever devised is now generally conceded. In cities with asphalt or macadamized streets children ride on bicycles to and from school, workmen ride to and from factories, and clerks utilize them to get to and from the stores. The status of the bicycle as a utilitarian vehicle in such cities is fixed. Nothing can disturb it.

The bicycle business therefore is not "dead." From a social fad or pastime wheeling has reached a utilitarian basis. What is needed now is a revival of the old-time competition between the different makes and styles of wheels, which was practically destroyed by the formation of the trust. It was the advertising incident to this keen competition that popularized the wheel. The only way, therefore, to impress the public with the utilitarian value of the wheel is to again inaugurate a vigorous and extended campaign of publicity.

It was thought at the beginning of the present era of combines that one of the first items in the cost of distribution to be cut off in each consolidated industry would be the appropriation for advertising. But with nearly every other portion of the old machinery of distribution cut off the combines have found themselves more dependent upon the agencies of publicity than before.

Forming a combine may cut down the cost of production and distribution, but it does not market the product of the consolidated plants. The goods must be sold. And in the absence of the ordinary channels of distribution, the appropriations for advertising and the thought and skill displayed in its preparation must be increased rather than diminished.

Colonel Pope is not the only head of an industrial combine who has learned this fact.—*Chicago Record-Herald.*

Tilton, N. H.—A telephone line is being built between Canterbury and Belmont to connect the Boscawen and Canterbury line with the Citizens' system. Formerly the Canterbury lines were connected through the Kearsage Telephone system with the Citizens' but when the Kearsage company was merged into the New England Telephone company Canterbury was shut out from connection with outside places. Now it is proposed through an altogether different direction to get service with the Citizens' system. The Citizens' company was shut out of Sanbornton when the New England got hold of the Tilton and New Hampton line but now the Citizens' has a line of its own in Sanbornton and another new one running through the west part of that town to Hill.

* * *

Mangohick, Va.—Good headway is being made toward extending the Richmond-Aylett 'phone line to this end of King William county. A short time since a line was extended from the Richmond and Aylett line from Manquin to Enfield, and thence from Enfield to Etna Mills the line has been completed to Enfield, and the poles and cross arms have been put up to Etna Mills, and now the people have organized and gone to work to put up poles from Etna Mills to Mangohick, from which point it is expected to extend it on to Hanover Courthouse, putting this end of the county in easy communication with Richmond, something the people have long felt the need of.

Digitized by Google

THE CALCULAGRAPH IN TOLL LINE SERVICE.

The Calculagraph company of New York has recently placed upon the Independent market an instrument for measuring Toll Line service, which is fully as efficient and serviceable as those used elsewhere. An advertisement of the company appears in the current issue of the TELEPHONE MAGAZINE, containing a description of the Calculagraph and tells what it does.

In a handsome leaflet issued by the Calculagraph company, entitled "Don't Do It With These," some important facts are given. It says:

The Calculagraph.

EXPERIENCE TEACHES:—That it is a physical impossibility for a telephone operator to accurately time toll messages by means of a visible clock dial and pencil.

That more than twenty per cent of the records of elapsed time so made show errors exceeding one minute on each message.

That over ninety per cent of such errors in timing messages are made in favor of the patron.

That by reason of such errors the telephone companies fail, in a large number of cases, to receive payment for service extending beyond the initial period of time for which a minimum charge is made.

That the loss of revenue, resulting from such errors, is equal to from six to fifteen per cent of the total receipts from toll business.

That with the Calculagraph it is possible to make accurate records of the time elapsing during telephone toll conversations while relieving the operator of much mental and physical effort.

That on ten thousand Calculagraph records which were tested, the average error was *less than four seconds per message.*

That errors in timing toll messages manually occur in small exchanges in about the same proportions as in larger and busier ones.

That even in a small exchange the Calculagraph will increase the toll receipts sufficiently to repay its cost in a short time.

That by the use of the Calculagraph it is possible to dispense with the former practice of holding up valuable trunk lines, while sending and receiving operators discuss the length of time consumed by the previous message and endeavor to agree upon some compromise figure for the record.

In view of these teachings which have been fully verified, what shall be said of the telephone manager who does not sanction the use of the Calculagraph? What excuse shall he offer to the stockholders of his company for failure to employ all means for economy in operating and the only available means for collecting *all the revenue it earns?*

The Calculagraph company will be pleased to send descriptive literature upon request.

Lafayette, Ind.—The Lafayette Telephone company has mortgaged its plant and franchises for $150,000 for the purpose of installing a common battery multiple system. The Lafayette Loan and Trust company is trustee for the bondholders.

* * *

Pittsburg, Pa.—The West Penn Telephone Co., with lines in Allegheny, Washington and Greene counties, is to float a $25,000 bond issue, the proceeds to be used in extending a line to Wheeling, and other improvements including an exchange at Washington, Pa. The company is to acquire all the property of the Chartiers Telephone Co., which operates a line between Carnegie and McDonald.

Digitized by Google

MONTHLY DIGEST OF TELEPHONE AND KINDRED PATENTS

Edited by Arthur F. Durand of the Chicago Bar.

Copies may be had, postage paid, by enclosing 5 cents for each one. Address inquiries in care of this magazine or to the Commissioner of Patents, Washington, D. C.

WILLIAM W. DEAN, CHICAGO, ILL., Assignor to Western Electric Co. No. 710,318, September 30, 1902. TOLL APPARATUS FOR TELEPHONE EXCHANGES.

This is a common battery toll-exchange system. The patent is assigned to the Western Electric Company, of Chicago, Ill. The diagram illustrates the different devices and also the circuit connections. answering-plug *c* in the spring-jack of the calling-line and by bringing her telephone into circuit learns the number of the line to which connection is desired. Having secured this information, the operator thereupon inserts the other plug *d* of the pair into the jack of the line wanted and then sets the key *g*, at the same time telling the calling party to operate his toll device. By setting key *g* both

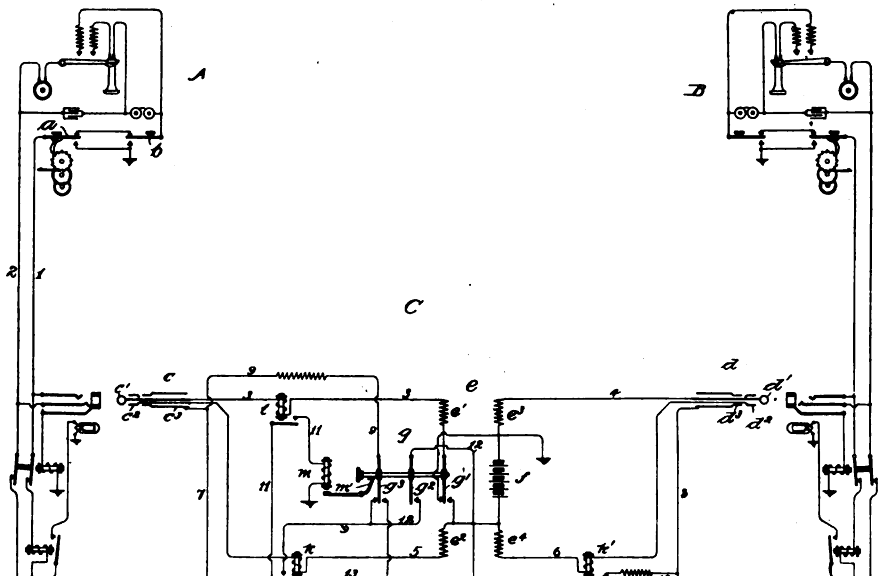

710,318—Toll Apparatus for Telephone Exchanges.

In the patent the operation is described as follows:

When a subscriber desires his line to be connected with some other line for conversation, he transmits a signal to the central office in the usual way by taking his telephone from its switch-hook, and thus closing the circuit through the line-relay, which draws up its armature and brings about the lighting of the line-signal lamp. The central-office operator responds to the signal by inserting her sides 3 5 of the portion of the plug-circuit leading to the answering-plug are connected in multiple to the free pole of the grounded battery *f*, and the mechanism is locked in that condition by the detent *m'*.

Although the supply of current for the calling-subscriber's transmitter is now cut off, he may still hear in his receiver any sounds transmitted from the called station, since a complete circuit for the telephone-currents is still established between

Digitized by Google

the two stations by way of the repeating-coil e in the plug-circuit. The calling subscriber may therefore wait until the called party answers before he complies with the operator's request to actuate his toll device. When the called party answers, the calling subscriber after hearing his response can instantly put his telephone in operative condition by depressing the key a. This breaks the line-circuit and grounds the limb 1 of the line, so that relay l receives current, while relay k does not, the result being that the local circuit 11, controlled jointly by said relays, is closed and the magnet m in said circuit is excited. The magnet m in drawing up its armature removes the detent m' and restores the switch g to its normal position, so that the battery f is again included in a bridge of the calling-line. If for any reason the calling party should desire to signal the central-office

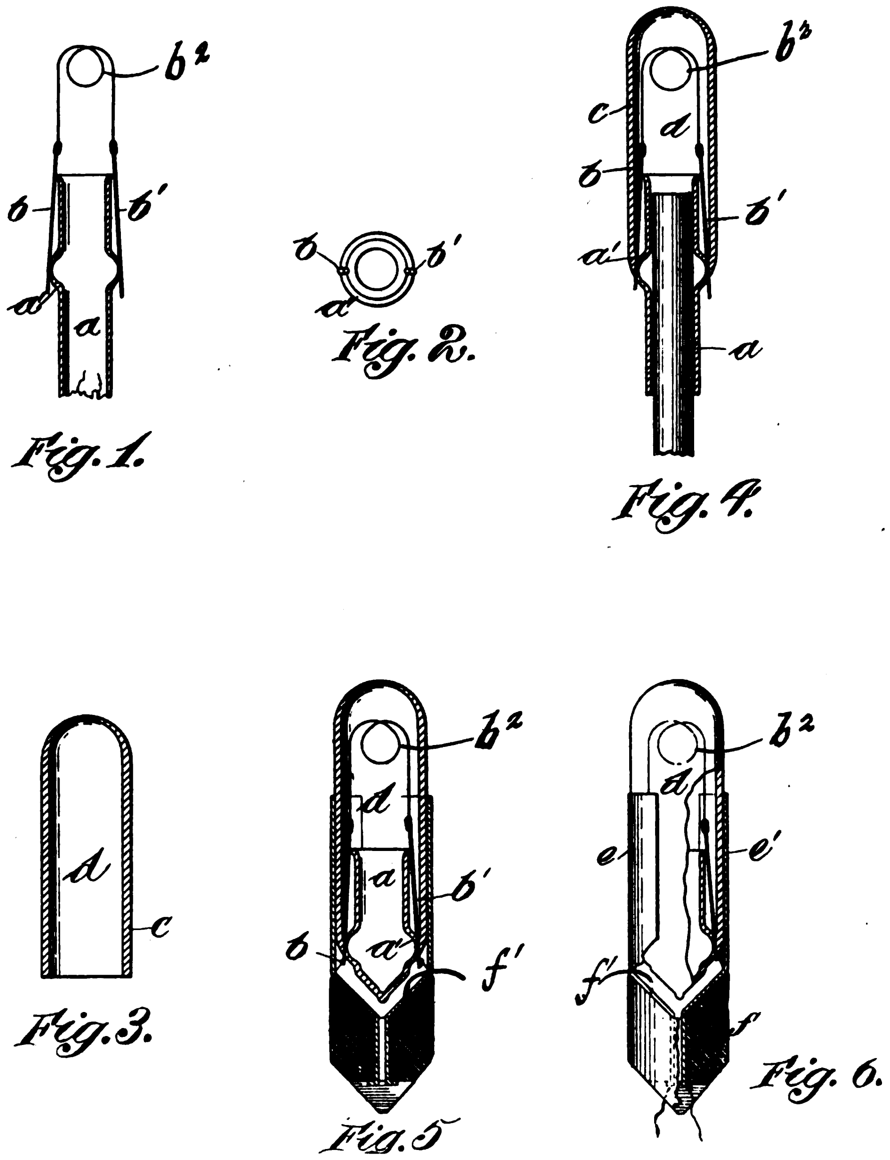

709,996—Signal Lamp for Telephone Switchboards.

operator before the called party answers, this may be accomplished by depressing the key *b*.

The effect of this is to close the circuit of conductor 2 to ground, while leaving conductor 1 open. Relay *l* is therefore left inert; but relay *k* is excited and closes the short circuit 12 about the resistance *i*, so that the signal-lamp *h* is lighted by the increased current. Should the calling subscriber attempt to restore the operative condition of his transmitting-telephone by merely touching a grounded wire to one of the line-terminals of his apparatus, both relays will be excited and the circuit 11 will not be completed. The lamp *h*, moreover, will be lighted to attract the attention of the operator, since the short circuit 12 will be closed by relay *k*.

FRANK R. MCBERTY AND FREDERICK H. LOVERIDGE, EVANSTON, ILL. No. 709,-996, September 30, 1902. SIGNAL-LAMP FOR TELEPHONE-SWITCHBOARDS.

This is an improved lamp for use on switchboards. The object of the invention is to provide the lamp with improved terminals for connecting it with the springs on the switchboard, and also to locate the fillament as near the end of the bulb as possible. This patent is assigned to the Western Electric Company, of Chicago, Ill. The drawings show the construction of the lamp and also illustrate the method of blowing and sealing the bulb.

MATHIAS WEISSER, MILWAUKEE, WIS. No. 710,309, September 23, 1902. TELEPHONE TRANSMITTER.

In this transmitter the enclosing shell is of very light and thin material and is secured in place without the use of additional screws. The spider B is secured directly to the transmitter front A. The screws E connect this spider with the arm D. The shell F is held between the hub G of the spider and the flange H of the arm. In this way, the fastening screw, by which the transmitter is secured to the arm, serves also as a means for securing the shell to the back of the transmitter.

FRANK R. MCBERTY, EVANSTON, ILL. No. 710,333, September 30, 1902. SELECTIVE CALLING APPLIANCE FOR TELEPHONE LINES.

This is an improved ringing key and apparatus for party lines. When a key is actuated, an indicator or signal is set to denote the character of the current which is projected onto the line. This of course also indicates the station which is signalled. The indicator, after having

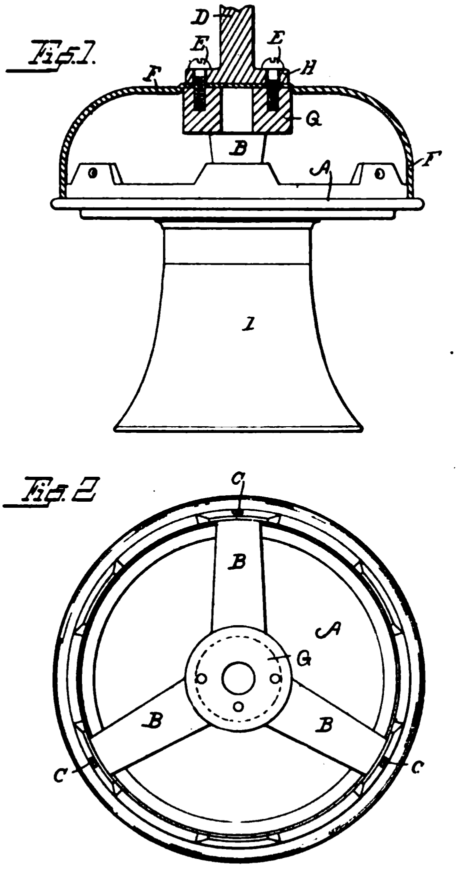

710,309—Telephone Transmitter.

once been set, remains in such position until restored. In other words, the signal remains displayed until a subsequent operation of a different key and a consequent transmission of a different signal. This patent is assigned to the Western Electric Company, of Chicago, Ill. The drawings illustrate the construction of the keys. There is also a diagram showing the circuit arrangement. The construction, as shown in the drawings, in-

Digitized by Google

volves the usual listening and ringing key and the pivoted actuating lever b^1, which latter is allotted to this key. The construction also involves a special calling key provided with a pivoted actuating lever e^1. There is also a target lever f provided with an indicator f^2. The links f^5 and f^6 engage pins on the target lever at opposite sides of the pivotal point of the latter. The said link f^5 is arranged to have sufficient play to permit actuation of the listening key without moving the target lever. Each of the links f^5 and f^6 have sufficient play to permit free movement of the target by the other lever.

RALPH PIERCE, CHICAGO, ILL. No. 710,-297, September 30, 1902. INSULATOR.

This is an improved insulator, in which the glass f is provided with a threaded bore. The wooden blocks e are threaded and adapted to screw into the bore of the glass. These blocks are arranged one at each side of the supporting arm d, which has a bent portion c at its upper end. This portion c acts as a wedge to crowd the blocks apart. It is claimed that this construction holds the insulator firmly on its support, and at the same time insures against breakage, such as might result from expansion of the metal support.

Fig. 1

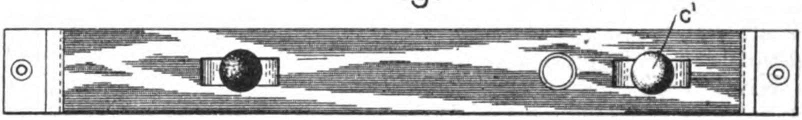

Fig. 2.

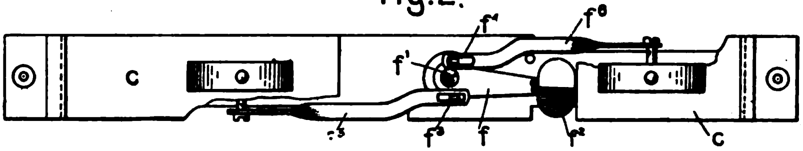

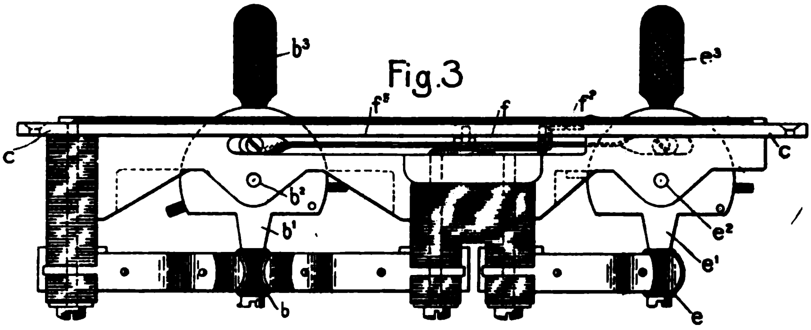

Fig. 4

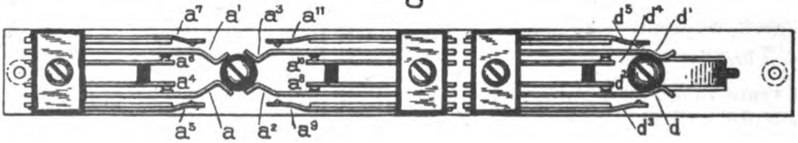

710,333—Selective Calling Apparatus for Telephone Lines—See also page ——.

WILLIAM FREDERICK SMITH, SAN FRANCISCO, CAL. No. 711,453, October 14, 1902. MESSAGE TRANSMITTING AND RECORDING MECHANISM FOR TELEPHONE SYSTEMS.

This patent illustrates and describes a somewhat complicated device or apparatus for transmitting, telegraphically, from one subscriber's station to another, words and sentences, formed of an arbitrary combination of letters and figures, to produce a cipher message, and for recording the message in a permanent form on a paper tape. The inventor's description is as follows:

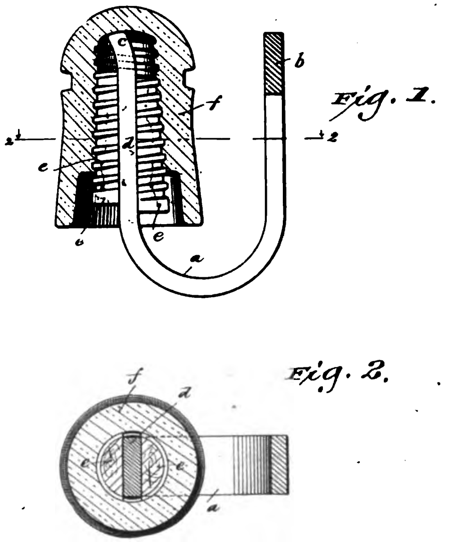

710,297—Insulator.

The complete device or apparatus provided at each telephone includes two separate sets of mechanism, which will be hereinafter designated and referred to as the "transmitting" mechanism, or that part by which the apparatus at one telephone is operated electrically from another connected telephone, the other part as the "recording" mechanism, or that part of the apparatus by which the transmitted words, letters, or numerals are printed on the paper tape at the receiving-telephone.

Proceeding to describe first the recording mechanism, 2 3 are two disks, herein termed the "printing-wheel," united by a common hub 4, that is fitted to rotate on a stationary axis, the two disks being set at a distance apart sufficient to allow a cord 57 to be attached to and wound on the hub between them. On the rim of one disk are type-letters arranged alphabetically and properly spaced, while the other disk is provided with type-numbers also spaced at regular intervals apart.

6 is a paper tape mounted on a spool and supported by means of two sets of rollers 50 51 beneath and in close relation to, but not in actual contact with, the faces of the printing-wheel. The roller 51, forming one of a pair of feed-rolls, is operated at intervals between the printing operations to draw the paper tape forward a proper distance each time to space the words or characters as printed. The manner of actuating this feed-roller will be described hereinafter.

15 is a rotable disk loosely mounted on the axis 4a in front of the printing-wheel, but separated from the latter, and 16 is a grooved wheel or sheave loose on its axis.

14 is a cord fastened at one end in the groove of the wheel 16 at a point below its axis and at the other end connected to a slide-button 12, the cord being laid over and around the wheel 16, so that by drawing down the slide-button in its guide-slot 13 the disk 16 will be rotated on its center in the direction indicated by the arrow, Fig. 1.

54 is a cord attached at one end to a coiled spring 55 and at the other end made fast to a hub or small sheave 58 of an eccentric shape on the front side of the grooved wheel 16. The movement of the wheel as effected by the cord and slide-button before mentioned will put the spring 55 in tension by winding up the cord 54 on the sheave 58, while the spring being allowed to react as soon as the slide-button is released its retractile force will bring back the grooved wheel to its original position, or starting-point, in the upper part of the guide-slot.

16 is a toothed wheel fixed against the front face of the grooved wheel 15 and practically a part of that wheel, the teeth being unformly spaced and set to make contact with a rocking finger or piece 19. The last-named piece is pivotally mounted over the toother wheel to rock or vibrate in a vertical arc between two sets of contact-springs 20 21 and 22 23. These springs are arranged in pairs on opposite

Digitized by Google

sides of the piece 19, and their free ends are placed in such relation to the vibrating piece that when the latter is moved ment in the opposite direction brings the two springs 22 23 of the other set in working contact.

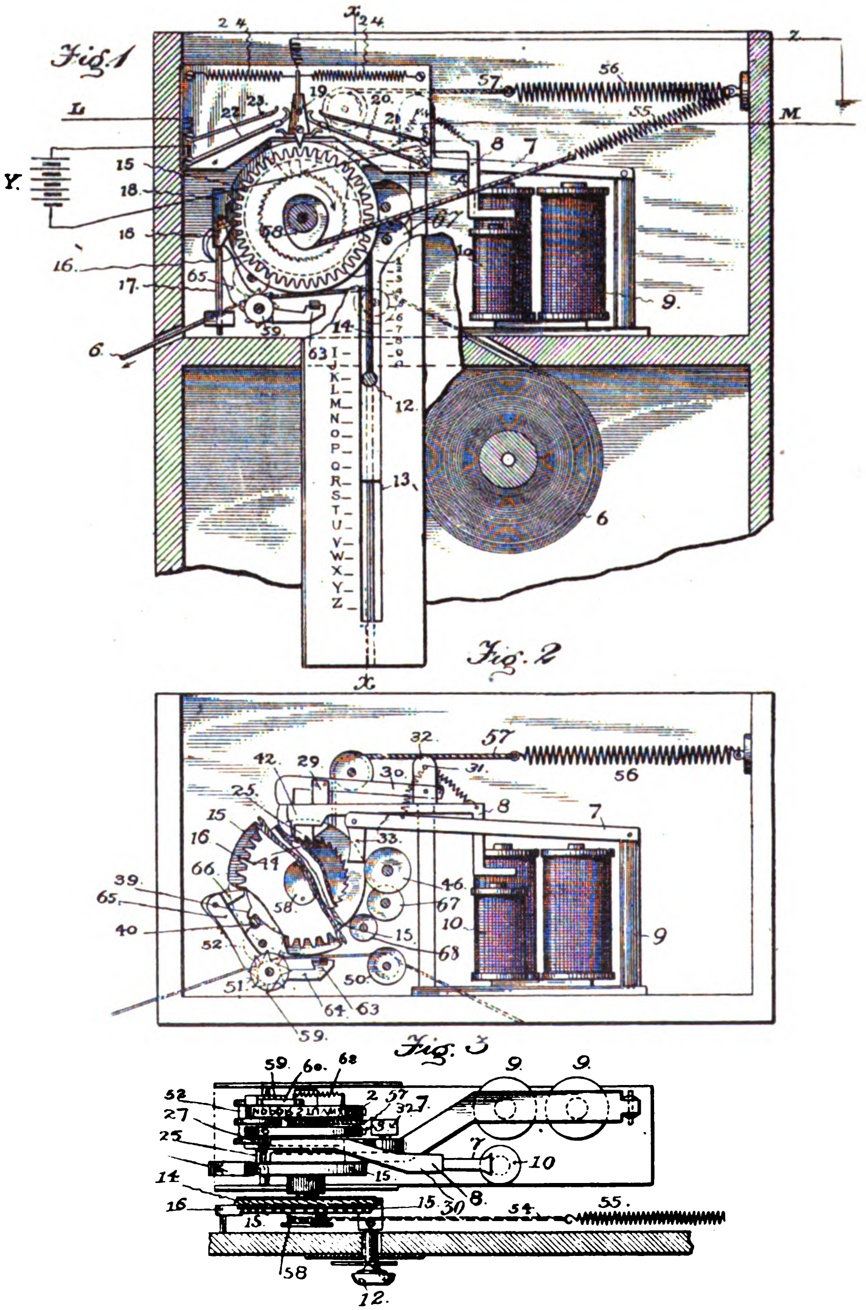

711,453—Message Transmitting Recording Mechanism for Telephone Systems.

out of the perpendicular in one direction the spring 20 will be brought in contact with its fellow-spring 21, while its move-

The oscillating piece 19 is always connected to a "ground" by a wire Z, and the contact-springs 20 and 22 are con-

Digitized by Google

nected to the opposite poles of a local battery Y and contact-springs 21 and 23 with the line-wires L M in such manner that when the piece 19 is rocked in one direction the line L will be connected to one pole of the battery and the other pole grounded, but when rocked in the opposite direction the connections will be reversed, thereby closing the line M on the battery on one side and grounding the remaining side of the battery. In these movements the free upturned end of the long spring 20 comes in contact with the insulated body of the piece 19 when the latter rocks toward the end of that spring, so that the last-mentioned spring is pressed upward against the shorter spring directly above, while the contact-stop 19a on the bottom of the piece 19 is pressed at the same moment against the long spring of the set on the opposite side of the piece 19.

Thus, for illustration, if the top end of the piece 19 be moved out of its vertical position of rest toward the left the insulated part of the piece pressing against the long spring 22 will bring it in contact with the spring 23 above, while the opposite long spring 20 and the contact-stop on the bottom of the piece directly under that spring are brought together at the same moment, the result of which movement of the piece 19 in the direction mentioned is to connect the line L to the side of the battery to which the spring 22 is connected and to ground the opposite pole that has for its terminal the spring 20, the ground connection being made through the contact-stop 19a and the wire Z. By the operation of this make-and-break mechanism pulsations are sent over the line L or the line M, according to the direction in which the toothed wheel 16 may be rotated.

To the line L at every telephone is connected an electromagnet 9, so arranged in the circuit that the pulsations transmitted over the line operate simultaneously both the magnet at the sending-telephone and the corresponding magnet at the receiving-telephone by rocking the circuit-closing piece 19 in one direction, and by the reverse movement of the piece the vibrations are transmitted to the similar magnet 10 at both telephones over the line M. These two sets of magnets acting on their respective armature-levers actuate and set the recording mechanism at the message-receiving telephone simultaneously with the corresponding mechanism at the sending-telephone through the following parts: The oscillating circuit-closer 19 is held normally at rest in a perpendicular position by coiled springs 24, and the toothed wheel 16 is rotated in one direction by drawing down the button 12 and in the opposite direction by the spring. These parts thus actuated transmit over one line to the magnet in circuit a greater or less number of vibrations according to the number of teeth that are caused to act on the oscillating circuit-closer.

On the release of the button 12 the coiled spring 55 turns the toothed wheel back to the starting-point, and the movements of the circuit-closer being reversed, as already described, the other magnet is energized and its armature-lever is operated. A loosely-pivoted pendulum 17, carrying pallets 18 and arranged at one side of the toothed wheel 16 to engage its teeth, operates after the manner of an escapement to control and regulate the speed with which the wheel moves when it is rotated in the one direction by the pulling force applied to the cord 14, and in the contrary direction by the reaction of the spring 55. These vibrations imparted to the armature-lever 7 turn the printing-wheel step by step through a pawl 33 on the lever engaging a circle of ratchet-teeth 44 on the side of the disk 70, loosely rotable on the same axis as the printing-wheel and connectible to the last-mentioned wheel by a stop 25 on the side of the disk and a stop 27 on the adjacent side of the printing-wheel.

The two stops are so arranged that as the disk 70 is turned on its axis in a forward direction its stop 25 engaging the stop on the printing-wheel takes up and carries that wheel around with the same extent of travel. By means of a locking-pawl 42 on the end of the armature-lever of the second magnet the setting-disk 70 is held at rest against the reactive force of a coiled spring 45 within the disk until the battery-circuit is closed on the magnet 10 through the reverse movement of the oscillating circuit-closer; but when that takes place the set-

Digitized by Google

ting-disk 70 is returned, while the printing-wheel remains at rest ready to print the letter or figure to which it was set, in which position it is held by a locking-dog 29 on a pivoted lever 30, having a fulcrum 31 in a fixed support 32. The by the stop 25 striking and throwing up the locking-dog 29. In the interval between the release of the setting-disk 70 from the dog 42, that locks it in the setting movement, sufficient time is provided for the printing mechanism to op-

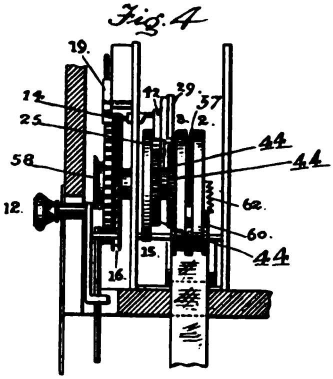

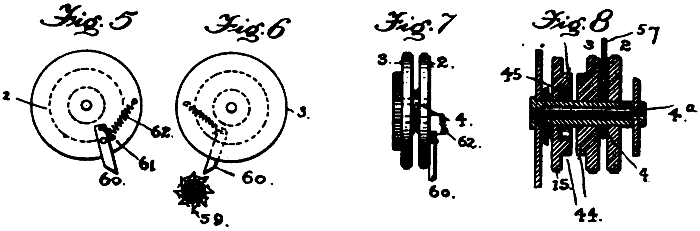

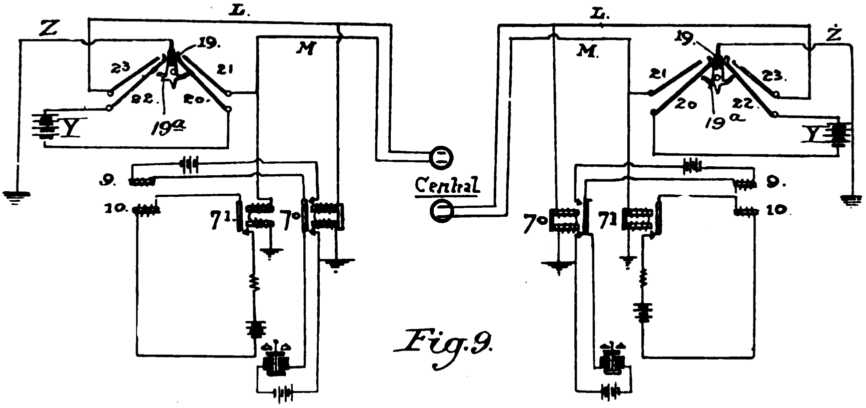

711,453—Message Transmitting and Recording Mechanism for Telephone Exchanges.

locking-dog last mentioned does not release the printing-wheel until after the paper has been brought in contact with the character to be printed, and this throwing-off operation is effected from the reverse movement of the setting-disk 70 erate before the setting-disk 70 arrives at the starting-point. This takes place when a tooth 39 on the rim of the setting-disk 70 strikes a fixed stop 40, that projects from the stationary frame. This stop is shown in Fig. 2. The pawl 33,

Digitized by Google

that moves the setting-disk 70 and is herein termed the "setting-pawl," is held up to the ratchet-teeth by a grooved roller 46, and the roller is so adjusted that it prevents the pawl from acting on and moving the setting-disk 70 more than one tooth at a time in each down-stroke of the pawl.

The paper strip 6, on which the characters are impressed by the printing-wheel, is carried and guided by rollers 50 51 52 and is fed by an intermittent movement given to the roller 51 from the printing-wheel through a star-wheel 59 on the axis of the feed-roller, and a vibrating dog 60, pivotally attached to the outer side of the printing-wheel and arranged to have a yielding movement when the printing-wheel turns in one direction, but held against a stop-pin 61 by a spring 62 when the wheel turns in the opposite direction, so that the point of the dog engaging the star-wheel will turn it as the printing-wheel rotates in one direction, but will slip by and not move the feed-roller when the motion of the printing-wheel is reversed.

A step-by-step movement of the paper is thus produced from the rotations of the printing-wheel. The paper strip is brought against the printing-wheel by an impression-pad 63 on the end of a lever 64, fast on a rock-shaft, having an upwardly-standing member 65, on the upper end of which is a yielding finger 66, projecting in the path of the tooth 39 on the setting-disk. The finger is pivoted on the end of the arm 65 and is free to yield and let the tooth on the setting-disk pass by without moving the rock-shaft; but in the contrary movement of the setting-disk the tooth strikes the finger from above, and that part being rigid on the arm in that direction the latter is thrown out and the pad 63 is thrown up against the paper strip under which it lies. At the end of that operation the setting-disk is arrested by the tooth 39 coming against the fixed stop 40, whereupon the setting mechanism is ready for the next operation.

The necessary inking-rollers 67 68 are arranged in proper relation to the printing-wheels to ink the type thereon.

Operating in the manner above described the setting-disk 15 moves the printing-wheel step by step forward as many spaces as are required to bring the desired letter or character in position to print, and then while the setting-disk is released and allowed to return to its first position by the locking pawl or dog being thrown out of the ratchet-teeth of the disk the printing-wheel is held stationary by the dog 29 29 resting in the ratchet-teeth on the wheel until the impression-pad is thrown against the printing-wheel, and afterward the dog being thrown off by the stop 25 on the setting-disk, as already described, the printing-wheel is brought back to the starting-point ready for the next setting movement. The next letter or figure to be transmitted and recorded is then set and printed by actuating the circuit-closing mechanism at the sending-telephone, as before, until the whole number required to form the message or signal is recorded. By means thus provided at every station a person desiring to transmit words or characters from one telephone to another first obtains electrical connection with the desired subscriber's telephone in the system in the usual manner by calling up the central station and getting connection through the station switchboard and switch-plugs. Then working his transmitting mechanism he moves his slide-button 12 along the slot to one letter or character after another, allowing the button to return each time to the starting-point, with sufficient intervals between the downward movements for the setting and recording mechanism to operate. The message or signal is recorded by the printing mechanism operating in this manner at the receiving-telephone at the same time that it is recorded by the corresponding mechanism at the sending-telephone, and thus a record of the message is made at both telephones. Messages transmitted from one telephone are thus mechanically recorded at another station in such permanent form that in the absence of a person at the receiving-telephone the message can be read from the paper strip at any time afterward on his return.

The diagram Fig. 9 illustrates the electro-magnets, circuits, and batteries, and the circuit making and breaking devices at two stations connected at the "central" switchboard, the figure showing also the

Digitized by Google

manner of connecting the bell-signal, which is actuated over the line from the central station by the operator through the usual plug connections, and of throwing in additional battery force at the receiving-telephone. In this arrangement the circuit from the battery and over the line-wire L to the opposite telephone when the springs 22 23 are brought together by the oscillating piece 19 actuates the circuit-closer 70 and by closing the battery-circuit on the magnet 9 energizes the latter, the vibrations of which produce the step-by-step movements of the setting-disk through the mechanism hereinbefore described, and afterward as the springs 20 21 are vibrated the circuit-closer 71, actuated in corresponding manner to the other one 70, but through a circuit over the other line-wire M, closes the circuit on the magnet 10. Thereupon through its armature-lever and associated mechanism already described, that magnet 10 acts to release the setting mechanism and restore the printing device to be set to record and afterward to record on the paper the next letter or character in the word or signal being transmitted.

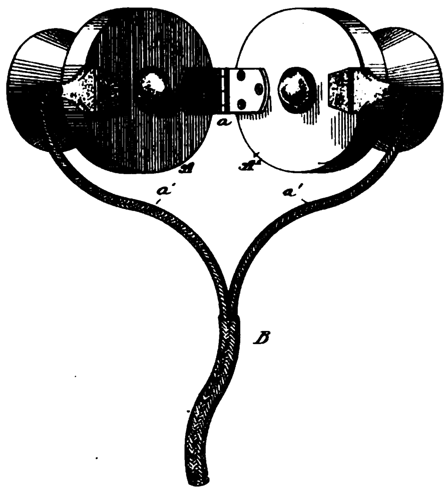

710,979—Telephone Transmitter.

MILLER REESE HUTCHINSON, NEW YORK CITY. No. 710,979, October 14, 1902. TELEPHONE TRANSMITTER.

The invention in this case consists in organizing a number of telephone transmitters and a telephone receiver into a sort of ear trumpet for deaf people. As shown in the drawings, a plurality of transmitters are hinged together and connected with an ordinary receiver. The receiver is held to the ear while the transmitters are held in the hand and directed toward the source of the sound. The inventor explains that with a plurality of transmitters thus connected or hinged together, the sounds coming from different directions can be plainly heard by a person hard of hearing.

Fig. 1.

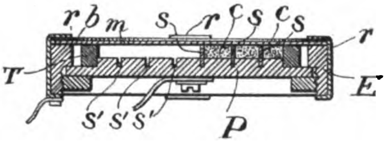

Fig. 2.

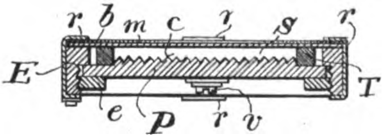

Fig. 3.

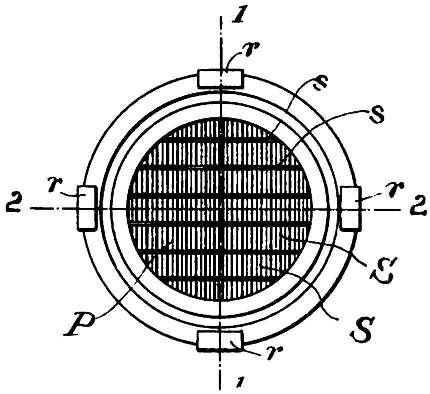

712,056—Microphone for High Tension Circuits.

RAOUL GAILLARD AND EUGENE DUCRETET, PARIS, FRANCE. No. 712,056, October 28, 1902. MICROPHONE FOR HIGH-TENSION CIRCUITS.

In this microphone the conducting-plate P is channeled to receive the partitions *s*, and is also corrugated, as shown in Figs. 2 and 3, the corrugations extending at right angles to the channels. A

Digitized by Google

ring of plush or felt F is seated in the offset extending around the margin of the plate P. The diaphragm or vibrating membrane *m* is mounted above. The carbon granuals are enclosed in the compartments formed by the partitions. With this arrangement, the granuals cannot shift from one compartment to the other. It is claimed that a microphone of this character gives good results, even when subjected to loud and harsh tones.

GEORGE T. NEWMAN, BONAPARTE, IA. No. 712,402, October 28, 1902. TELEPHONE ATTACHMENT.

This is a scheme for enabling two subscribers on a party line to carry on conversation over a private line and to readily switch their telephones into either one of the two circuits. The attachment is in the nature of a switchbox which can be mounted at the side of the subscriber's telephone. With this arrangement, two telephones, upon the same or two separate party lines, can be connected to a private line, calls can be received simultaneously over both lines, and conversation can be carried on over the private line without the necessity of calling up central. When the telephone is in circuit with either of the two lines, its bell will receive all signals sent over such line, while the bell of the attachment will receive the signals sent over the line which is disconnected from the telephone. The accompanying diagram shows the circuit arrangement and method of connecting up the telephones and switching attachments with the private line. In the patent there are other drawings illustrating the construction of the switching attachments. The claims in the patent are drawn to cover this specific construction of switch.

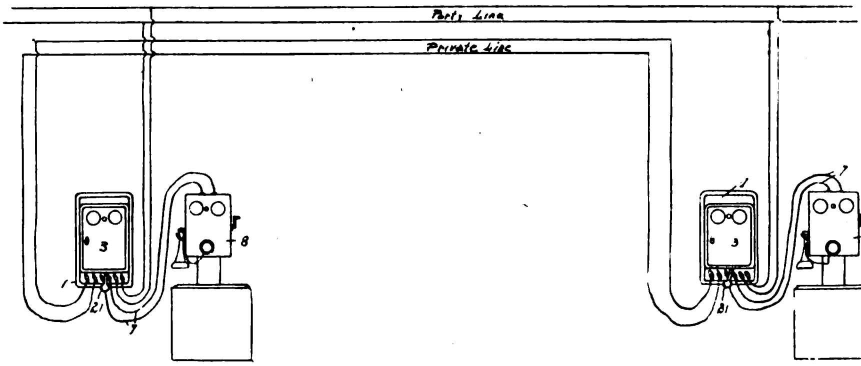

712,402—Telephone Attachment.

LOUIS J. TOEFFLEN, NEW YORK, N. Y. No. 710,065, September 30, 1902. SELF-RESTORING TELEPHONE.

The invention in this case is styled a "Self-Restoring Telephone." In the patent there are several drawings illustrating the construction of the apparatus. There are also two diagrams showing the circuit connections. Both the diagrams and figures showing the construction are herewith reproduced. Referring to the two diagrams, the inventor's description is as follows:

In Fig. 6 are shown two instruments, the one at the right calling the one at the left, or, in other words, the button *b* at the right having been moved to contact *a* to *c*, so that the current or circuit is closed along 5 and 14 to 12″, actuating the call or buzzer 11″ at the left and continuing on through 10″ and 9″ to lever *g*″ and wires 8 and 6 back to spring *a* and point or bar *c*.

After the call is made the bottom *b* at the right is released, and spring *a* now cuts off or opens the call-circuit at *c*, Fig. 7, and closes the talking-circuit at *d*, and the two receivers *i* and *i*″ being taken off the hooks *g* and *g*″ at the right and left hand instruments, the talking-circuit is closed at *d a* along wires 6 and 8 to lever *g*″ and wire 17 to receiver *i*″ and transmitter 18″ along wire 14 to transmitter 18 and receiver *i* to wire 16 and contact *d a*.

Digitized by Google

DAVID S. HULFISH, CHICAGO, ILL. No. 712,455, October 28, 1902. BUSY-TEST SYSTEM.

This is a busy test for common battery party-line systems. The accompanying diagram shows a party line with three sub-stations, and also illustrates the switchboard at the central station. This patent is assigned to the American Bell Telephone Company, of Boston, Mass.

Referring to the central-station appliances, it will be seen that a busy-test conductor 31 unites the several switch-socket test-frames *d* and a connection 24 from the source H or any similar source of testing potential extends to said test-frames through the contacts 29 30 of the special relay D and a resistance *r*. The magnet-coil of the cut-off relay R is in an earth branch 33 from test-conductor 31 at point 32. When two sub-stations of the same circuit are talking together, it is quite as necessary to protect the circuit from interruption as it is when the line is

Fig. 6

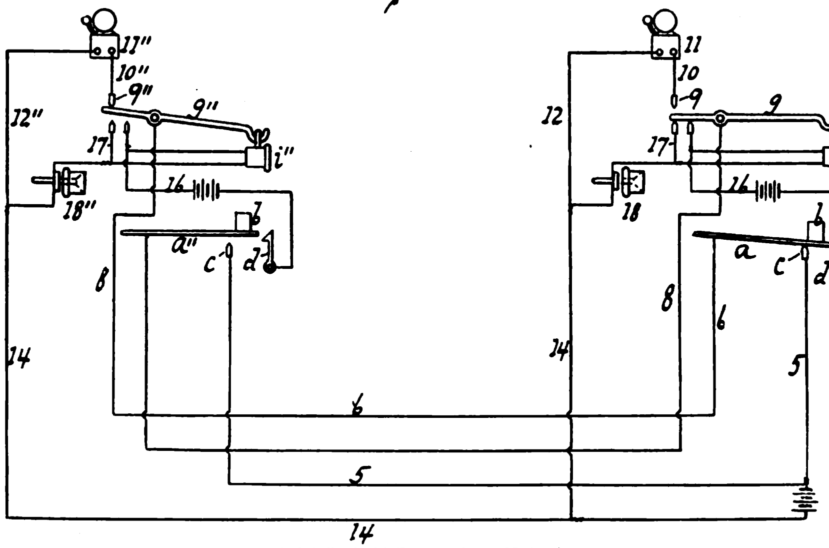

710,065—Self-Restoring Telephone.

Fig. 7

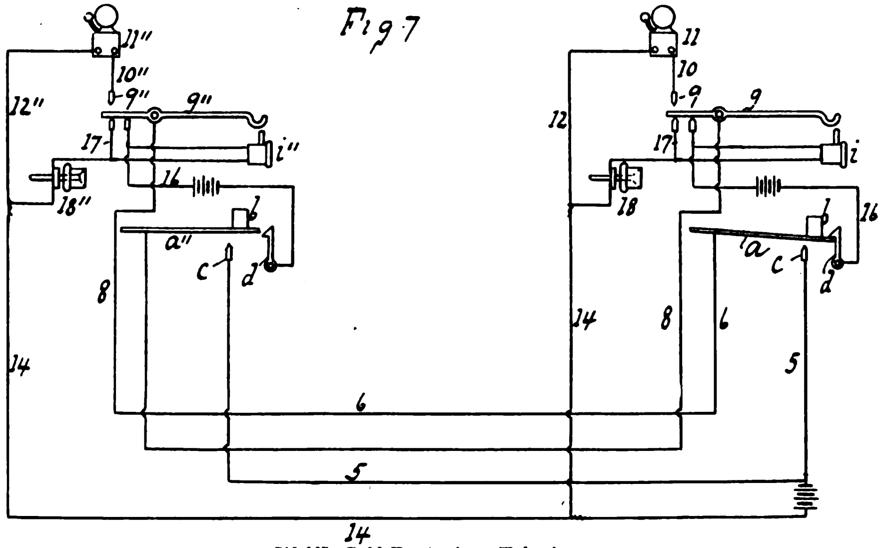

710,065—Self-Restoring Telephone.

Digitized by Google

switched for communication between one of its own stations and a station of another line; but under such conditions it is required that the cut-off relay shall not be pleted, so that the current of battery H can flow therein through the magnet-coil of relay D. The said relay is thus excited and the contact 29 30 is made, es-

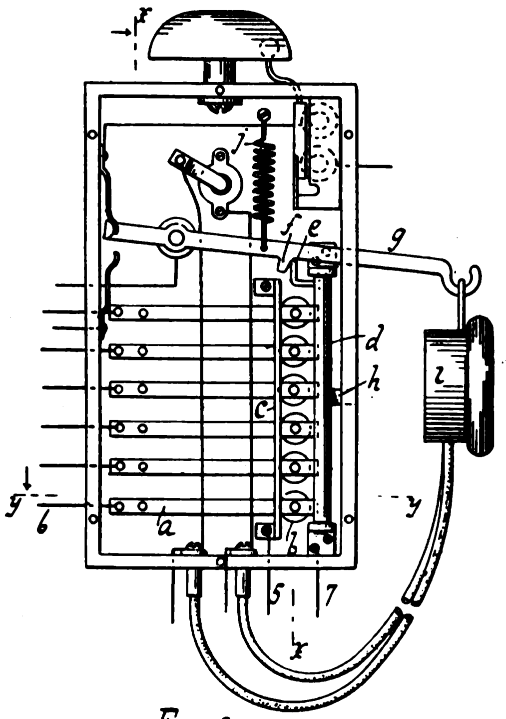

Fig.3

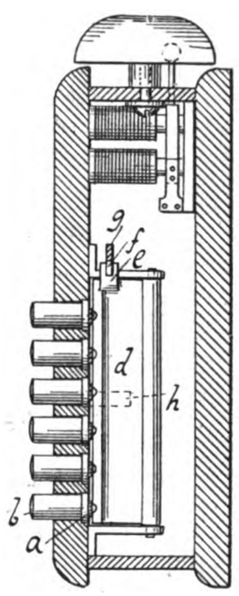

Fig 4

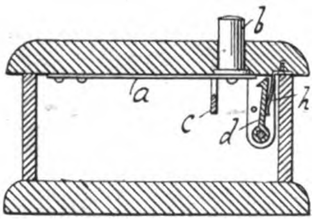

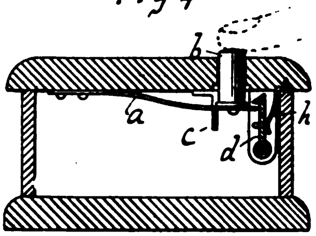

Fig.5

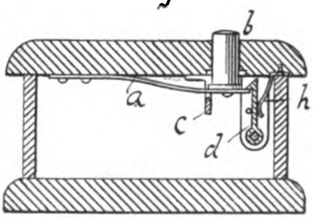

710,065—Self-Restoring Telephone.

operated. This is accomplished by the use of relay D. When two stations of the same circuit are in communication, their receivers are taken from their suspension-switches and the metallic circuit is comtablishing an electrical testing potential upon test-rings *d* by connecting them through conductors 31 and 24 with the source H at pole 23. The resistance *r* is of such magnitude that with a normal

Digitized by Google

adjustment of the cut-off relay R any current passing through the said relay R is insufficient for its operation. Hence the busy test employed during the communication between two stations of the same circuit can be applied without operating the cut-off relay, and therefore without interfering with the circuit connection between the main circuit L and the source H, whose current is required for the supply of the sub-station-transmitters.

P is the answering-plug of an ordinary switch-cord (not shown), and, as usual, potential is impressed upon its test-rings through the intermediation of the extra relay D and that during the engagement of said line by switching it to another line for communication between stations of the said two lines the busy-test potential is impressed upon the test-rings by way of the third or local plug-contact, the conductor thereof, and the battery connected therewith. In the former case it is necessary to retain the normal connection of the source H, and accordingly means are provided to prevent the operation of the cut-off relay R; but in the lat-

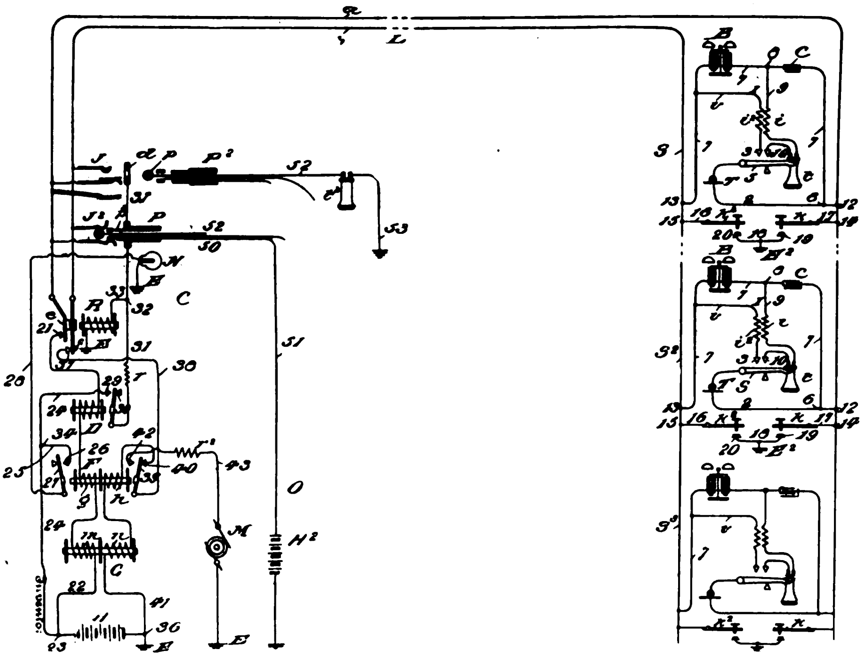

712,456—Busy Test System.

its local or sleeve contact surface p^3 registers with the test-ring d of any socket wherein it is inserted. The said sleeve-contact is united by the local cord conductor 50 and its extension 51 to the battery H^2 and ground. Thus whenever the said plug is inserted in a socket d to answer or make a call the current from battery H^2 flows over the local circuit thereby established to operate the cut-off relay R in such local circuit and to impress a test potential upon all other switch-socket test-pieces belonging to the same subscriber's circuit.

It is now evident that when the line is engaged in a local communication between two of its own sub-stations the busy-test ter case it is desirable to disconnect said battery H, and the cut-off relay is made to operate. In either case should the line protected be desired for connection by another one the test is made in the usual way, as indicated by the test-plug P^2, which may, as is customary, be the companion plug of a pair associated with a switchboard, the tip-conductor p of such plug being for this purpose united by the conductor 52 to the test-circuit 53, which contains the operator's receiver t^2. The tip of the plug in making the test is applied to the test-ring, the operator meanwhile listening at the receiver, and if the line is busy the test-potential impressed

Digitized by Google

upon said rings is manifested as a sound in the receiver, which otherwise is silent.

David S. Hulfish, Chicago, Ill. No. 711,973, October 28, 1902. Signaling and Switchboard Apparatus for Telephone Exchange Circuits.

This is the companion patent to No. 712,455. This latter patent was granted on a divisional application of patent No. 711,793. In the divisional patent only the busy-test circuit is claimed. In the present patent there are claims for the is now to be steadily depressed, no code-signal being required in the transmission of a central-station signal. The line conductor *a*, as in the former case, constitutes a grounded circuit for the current of source H, the route of such circuit at the central station being the same as before, but at the sub-station being from main conductor *a* through the closed telephone-bridge 7 to key k^2 and ground by way of point 12, conductor 2, transmitter T, suspension-switch *s*, point 3, secondary induction-coil winding i^2, conductor *v*,

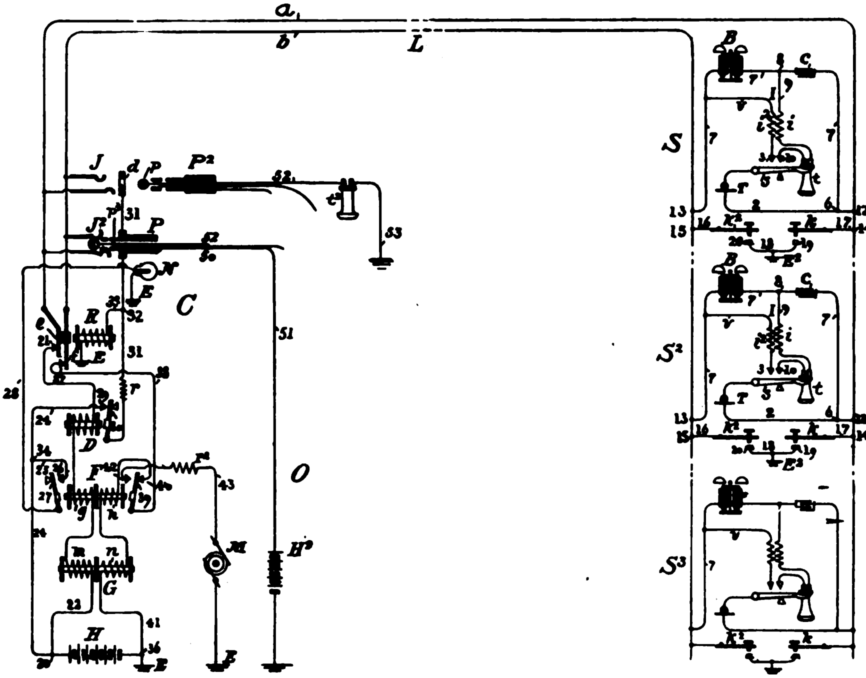

711,973—Signaling and Switchboard Apparatus for Telephone Exc..ange Circuits.

general system and circuit arrangement. This patent is also assigned to the American Bell Telephone Company, of Boston, Mass. The inventor's description is as follows:

Let it now be assumed that a sub-station—say S—desires to obtain a connection through the switchboard with a sub-station of another circuit. The receiver *t* is to be removed from the switch *s*, as in the former case, so that the person desiring to use the line may find out whether it is disengaged; but in this case finding the circuit free the receiver is not replaced, but remains off the hook until the close of the communication. The key k^2 point 13 and 15 on main conductor *b*, branch 16, key k^2, contact-anvil 20, and connection 18. Since this circuit includes the coil of relay D and the exciting-coil *g* only of relay F, these relays both become operative and perform their several functions. Armature 27 of the latter is now steadily attracted, maintaining the branch circuit 28 of signal N steadily closed and the said signal steadily displayed until the call is answered.

The sub-station-bells are not rung, because although the armature 39 of the relay-switch F is attracted and the call-generator thereby united to conductor *b* the currents of said generator are shunt-

Digitized by Google

ed from the bells by the resistanceless ground applied to conductor b at the key k^2 of the calling sub-station. The resistance r^2 is of such magnitude as to prevent the call-currents from attaining an undesirable strength while thus substantially short-circuited. When the call is answered by inserting the answering-plug P in the socket J^2 of the calling-line, the busy-test potential is impressed upon the test-rings of the multiple-switch sockets in the regular way through the third or local plug and cord conductor, and since and of course cease to exercise their several functions.

From what has been stated it is evident that no call-signal can be transmitted simply by removing the receiver from the switch, but that such action alone merely sets the automatic busy test; also, that to call other sub-stations of the same circuit one key must be operated in correspondence with the code-signal of such stations, the receiver being in place on the switch, and that to call the central station from any sub-station the other key

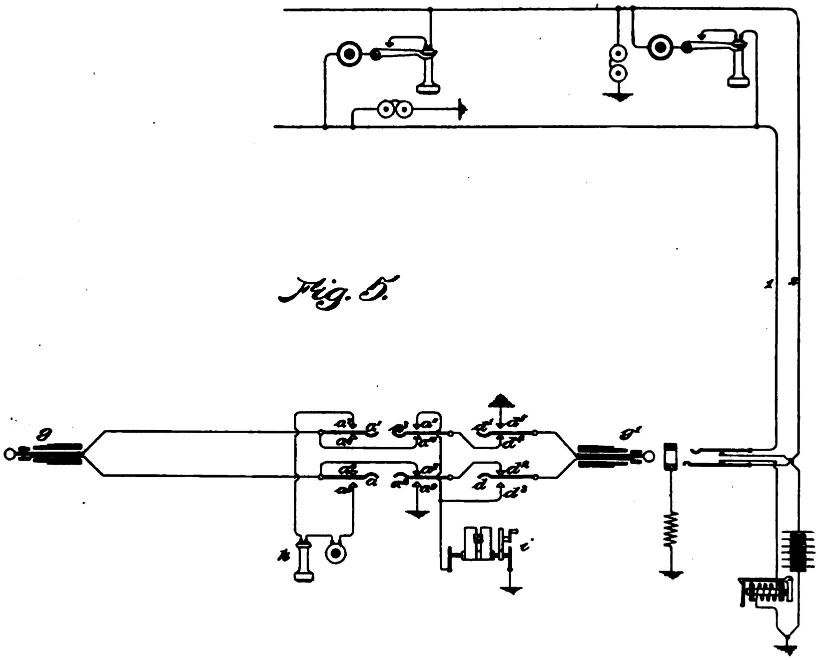

710,333—F. R. McBerty Patent Pag —.

current can now flow through said cord conductor to the cut-off relay R by way of a path independent of the resistance r the said relay is operated in a manner and for a purpose well understood.

The use of the impedance-coil G is in part to regulate the current admitted to the line and partly to prevent waste or diversion of the voice-currents when two stations of the same circuit are conversing.

When the main circuit L has been switched to another circuit at the central station and the cut-off relay has been operated as described above, the impedance-coil G, relay-switch F, and test-current relay D are severed from the said circuit must be steadily depressed, the receiver being kept off the switch.

Fairmount, Ind.—The Citizens' Telephone company has been incorporated with a capital of $10,000 by Charles T. Parker, John Kelsey, William A. Beasley, Cornelius R. Small, James F. Life, Cal Dean, A. R. Long and F. U. Sluder.

* * *

St. Joseph, Mo.—The new rural telephone system, now being erected in Princeton township, and in the town of Princeton, is nearing completion. The poles are rapidly being put into position, and the work is expected to be completed by November 1.

Digitized by Google

DIRECTORIES
of
THE INDEPENDENT TELEPHONE ASSOCIATIONS.

Under the above title it is our intention to establish a department devoted to the movements and progress of the various Independent Telephone Associations, and the columns of the Telephone Magazine will be at all times open to the members of the different Associations for the discussion of matters of practical interest to those engaged in telephony. We ask the hearty co-operation of the secretaries of each Association, which we trust will be given. If every month each secretary will forward reports of meetings, changes in officers, new exchanges and other information which will be interesting to his fellow workers, the same will receive our prompt attention. Copy should reach this office not later than the 7th of the month.

The Independent Telephone Association of the United States of America.

President—James M. Thomas, New York, N. Y.

First Vice President—Hugh Dougherty, Bluffton, Ind.

Second Vice President—C. E. Stinson, Rochester, N. Y.

Third Vice President—W. H. Durin, Cedar Rapids, Ia.

Secretary and Treasurer—Jos. B. Ware, Detroit, Mich.

First Assistant Secretary—C. E. Wilson, Philadelphia, Pa.

Second Assistant Secretary—Ed. L. Barber, Wauseon, Ohio.

Third Assistant Secretary—T. B. Lee, Pittsburg, Pa.

Advisory Board.

James M. Thomas, New York, N. Y.
Hugh Dougherty, Bluffton, Ind.
H. D. Critchfield, Mt. Vernon, Ohio.
E. B. Fisher, Grand Rapids, Mich.
S. E. Wayland, Scranton, Pa.
S. P. Sheerin, Indianapolis, Ind.
E. E. Webster, Minneapolis, Minn.
H. C. Young, Columbia, Pa.

Executive Committee.

Georgia—F. V. L. Turner, Atlanta.
Illinois—Thomas A. Marshall, Keithsburgh.
Indiana—Geo. F. Tier, Ft. Wayne.
Iowa—Henry E. Herr, Ottumwa.
Kentucky—J. A. Armstrong, Louisville.
Michigan—R. F. Johnson, Saginaw.
New Jersey—John J. Burleigh, Camden.
Florida—W. G. Brorein, Tampa.
Kansas—C. E. Wells, Marion.
Maine—L. A. Goudy, Portland.
Maryland—Frederick P. Boughton, Baltimore.
Missouri—H. L. Reber, St. Louis.
Massachusetts—Victor A. Sears, Boston.
Nebraska—Thos. E. Parmelee, Plattsmouth.
New York—C. L. Ingham, Buffalo.
Minnesota—C. H. Judson, Minneapolis.
Pennsylvania—C. W. Kline, Hazelton.
North Carolina—W. W. Shaw, Durham.
South Carolina—W. B. Moore, Yorkville.
Virginia—N. C. Watts, Staunton.
Texas—Mrs. Annie M. Brett, El Paso.
Wisconsin—A. L. Hutchinson, Weyauwega.
Ohio—Frank L. Beam, Columbus.

INDIANA MUTUAL TELEPHONE ASSOCIATION.

Officers.

President—L. A. Frazee, Connersville, Ind.

Vice President—C. M. Zion, Lebanon, Ind.

Secretary and Treasurer—Harry B. Gates, Indianapolis, Ind.

Legislative Committee.

L. A. Frazee, Connersville, Ind.
S. P. Sheerin, Indianapolis, Ind.
H. B. Gates, Indianapolis, Ind.
James B. Goodrich, Winchester, Ind.
Perry J. Freeman, Richmond, Ind.

Officers.

President—G. A. Kienle, Huntingburgh, Ind.

Vice President—C. D. Knoefel, New Albany, Ind.

Secretary—E. W. Pickhart, Huntingburgh, Ind.

Treasurer—T. M. Thom, Lamar, Ind.

Digitized by Google

IOWA TELEPHONE ASSOCIATION.

Annual Meeting Held at DesMoines, on the Second Tuesday in March.

Officers.

President—U. S. Alderman, Nevada.

Vice President—Henry S. Herr, Ottumwa, Ia.

Secretary and Treasurer—Chas. C. Deering, Boone, Ia.

SOUTHEASTERN IOWA INDEPENDENT TELEPHONE ASSOCIATION.

October 1901, Third Annual.

Officers.

President—Dr. H. S. Herr, Ottumwa, Ia.

Vice President—W. H. Fowler, Pella, Ia.

Secretary and Treasurer—Fred W. Kelley, Oskaloosa, Ia.

THE NEW YORK STATE INDEPENDENT TELEPHONE ASSOCIATION.

Organized July 25, 1902.

Officers.

President—Martin Carey, Buffalo, N. Y.

Vice President—C. E. Stinson, Rochester, N. Y.

Secretary—Chas. H. Blood, Ithaca, N. Y.

Treasurer—F. E. Lyford.

THE NEW YORK INDEPENDENT TELEPHONE ASSOCIATION.

Organized July 25, 1902.

Officers.

President—Geo. R. Fuller, Rochester, N. Y.

First Vice-President—Howard Hendrickson, Albany, N. Y.

Second Vice-President—Boyd McDowell, Elmira, N. Y.

Secretary and Treasurer—Chas. O. Harris, Rochester, N. Y.

OHIO INDEPENDENT TELEPHONE ASSOCIATION.

Officers.

President—J. M. Thomas, Cleveland, Ohio.

Vice-President—D. J. Cable, Lima, O.

Second Vice-President—C. Y. McVey, Youngstown, O.

Secretary and Treasurer—H. D. Critchfield, Cleveland, O.

SOUTHERN INDEPENDENT TELEPHONE ASSOCIATION.

Organized March 19, 1902.

Comprising the following states: North Carolina, South Carolina, Georgia, Florida, Virginia.

Officers.

President—F. V. L. Turner, Atlanta, Ga.

Vice-President—W. G. Brorein, Tampa, Fla.

Second Vice-President—W. B. Moore, Yorkville, S. C.

Third Vice-President—W. W. Shaw, Durham, N. C.

Secretary and Treasurer—P. D. Langdon, Augusta, Ga.

TEXAS, OKLAHOMA AND INDIAN TERRITORY INDEPENDENT TELEPHONE ASSOCIATION.

Organized July 18, 1902.

Officers.

President—J. E. Boynton, Waco, Tex.

First Vice-President—C. W. Roberts, Abilene, Tex.

Second Vice-President—E. D. Nims, Roff, I. T.

Third Vice-President—C. H. Duffy, Muskogee, I. T.

Secretary and Treasurer—J. B. Earle, Waco, Tex.

INDEPENDENT TELEPHONE ASSOCIATION OF WISCONSIN.

February 19-20, Third Annual.

Officers.

President—Richard Valentine, Janesville, Wis.

Vice-President—H. D. Slater, Waupaca, Wis.

Secretary and Treasurer—H. D. Winter, Madison, Wis.

KANSAS INDEPENDENT TELEPHONE ASSOCIATION.

Organized, January 28, 1902.

Officers.

President—A. R. Champlin, Newton, Kan.

Vice President—B. F. Pankey, Topeka, Kan.

Secretary—C. E. Wells, Marion, Ia.

Treasurer—J. W. Smith, Minneapolis, Kan.

Digitized by Google

Executive Committee.

C. L. Brown, Abilene, Kan.
J. E. Byers, Ottawa, Kan.
E. H. Berry, Atchison, Kan.
W. H. Nelson, Smith Centre, Kan.
A. R. Champlin, Newton, Kan.

KENTUCKY TELEPHONE ASSOCIATION

Organized, November 2, 1898.

Officers.

President—D. L. Pendleton, Winchester, Ky.

Vice President—H. K. Cole, Lancaster, Ky.

Secretary and Treasurer—James Maret, Mt. Vernon, Ky.

INDEPENDENT TELEPHONE ASSOCIATION OF MAINE.

Organized, October 19, 1901.

Officers.

President—Maynard S. Bird, Rockland, Me.

Vice President—Geo. W. Q. Perham, Bryants Pond, Me.

Second Vice President—L. A. Goudy, Portland, Me.

Secretary and Treasurer—Sam'l T. White, West Paris, Me.

MICHIGAN INDEPENDENT TELEPHONE ASSOCIATION.

Organized, 21, 1897.

Officers.

President—J. B. Ware, Detroit, Mich.

Vice President—R. B. McPherson, Howell, Mich.

Secretary—Chas. E. Brown, Alma, Mich.

Treasurer—R. F. Johnson, Saginaw, Mich.

MINNESOTA INDEPENDENT TELEPHONE ASSOCIATION.

Organized June, 1902.

Officers.

President—Dr. J. H. James, Mankato, Minn.

First Vice President—Hon. James A. Tawney, Winona, Minn.

Second Vice President—J. J. Greaves, Glencoe, Minn.

Third Vice President—E. J. Bradley, Duluth, Minn.

Secretary—W. Howard Meers, West Concord, Minn.

Treasurer—Joseph Lockey, St. Paul, Minn.

MISSOURI RIVER TELEPHONE ASSOCIATION.

Organized April, 1902.

Officers.

President—H. E. Ralston, Maitland, Mo.

Vice President—G. A. Haynie, Savannah, Mo.

Secretary and Treasurer—L. N. Fry, Grant City, Mo.

NEBRASKA INDEPENDENT TELEPHONE ASSOCIATION.

Third Annual, February 17-18, 1902.

Officers.

President — Thomas E. Parmelee, Plattsmouth, Neb.

Vice President—I. D. Clarke, Papillion, Neb.

Secretary and Treasurer—E. C. Hansen, Fairbury, Neb.

Committee on a State Contract.

A. E. Gantt, Falls City, Neb.
Byron Clarke, Plattsmouth, Neb.
C. W. Hansen, Fairbury, Neb.

SUES TELEPHONE COMPANY.

Patrick Hanley of Lutherville, by Boardman & Lindsay, his attorneys, has docketed suit against the Chesapeake and Potomac Telephone company, claiming $2,000 damages. The declaration alleges that the defendant corporation, by its agents, entered the land of the plaintiff on Joppa road, near Towson, and broke and cut down large trees, dug holes and planted poles therein and strung wires.—*Baltimore Sun.*

* * *

Fort Morgan, Col.—The business men, agriculturists and stockmen of Morgan county are displaying considerable enterprise by the building and organization of an independent telephone system, which is growing rapidly, over 300 'phones being at present in use. The stock is owned entirely by members greatly interested in the success of the undertaking and the association will not cease their labors until connection has been made with all towns in the district. The first dividend has already been declared and was made at the rate of 14 per cent per annum. The company is receiving loyal support from nearly every one in this section, as the people appreciate the value of the work being done in their interests.

Digitized by Google

CIRCUITS OF STANDARD TELEPHONE SETS.

F. A. Wagner.

As we view the march of human progress in the contemplation of the Exposition Buildings and the beauties and mechanical utilities conceived in genius and wrought with surpassing skill, which are contained therein, we have before us only one of the many evidences that the world "she do move."

Taking it from the time the first public exhibition of the articulating telephone was made in the United States in 1876 at the Centennial Exhibition in Philadelphia, we will consider the first telephone circuit, leaving out of the question the original or true inventor of same, though every one of the following illustrious men has contributed something towards the development and evolution of the telephone; namely, Professor Page of Salem, C. Bourseul, Philip Reis, Alexander Graham Bell, Elisha Gray, Daniel Drawbaugh, Thomas A. Edison and many others.

The first telephone circuit consisted originally of nothing more than two telephones, or receivers, as they are known to us, attached to a line, one end of each coil being connected to the line wire and the other to earth.

Take the string telephone (Fig. 2), for instance, and see what a close resemblance it bears to the first circuit. This telephone consists simply of two paper boxes connected with a string. When this string is pulled taut and the box is spoken into at one end, the mechanical vibrations reproduce the sound waves in the listener's ear.

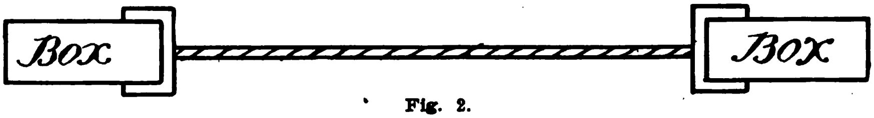

Fig. 2.

We will now consider Edison's three inventions in one. First, he made a local circuit out of the primary or telephone circuit; second, he inserted a battery and his carbon transmitter (Fig. 3) thereby changing immediately the results heretofore obtained; third, he added the induction coil (Fig. 4) in the circuit, and for the last twenty years or more the battery telephone circuits have fundamentally remained the same, because the induction coil, carbon transmitter, and battery have been retained in some part of the circuit to accomplish the desired results.

The addition of the magneto generator with its shunts and attendant troubles added another piece of apparatus to the telephone and also increased the cost, thought it was and is still a useful device.

Of late years it has been the practice to provide in the instrument a condenser (Fig. 12) instead of the generator, many telephones containing nothing but a hook, call bell, transmitter, and receiver, all other apparatus being centralized or placed in the exchange.

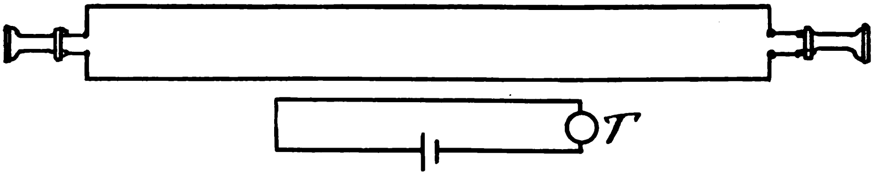

Fig. 3.

Right here I think it may be appropriate to call attention to the possibility of Morgan, the great financier, having conceived the idea of his combinations, trusts, etc., from seeing advertised the potent words, "Central Energy" of some

Digitized by Google

of our prominent Independent telephone manufacturers. This is without apologies to either.

Now we have before us a simple series circuit (Figs. 5 and 6). This circuit is well adapted to general exchange work or on party lines with one or more telephones in series. The call bell being a series with the line and in this and the circuits 6, 7 and 8, the top contact C is closed when the receiver is on the hook. (Hook not shown.)

The switchboard circuits and apparatus pertaining to these circuits (9, 10 and 11) will be written up at some later date.

In the evolution of the telephone, most of the men engaged in that work have kept up with the improvements as made, but some have not, even to one brilliant dummy in the telephone business on a trouble case cutting out the *secondary* side of an ordinary operator's set to save battery current.

The writer also has in view some mem-

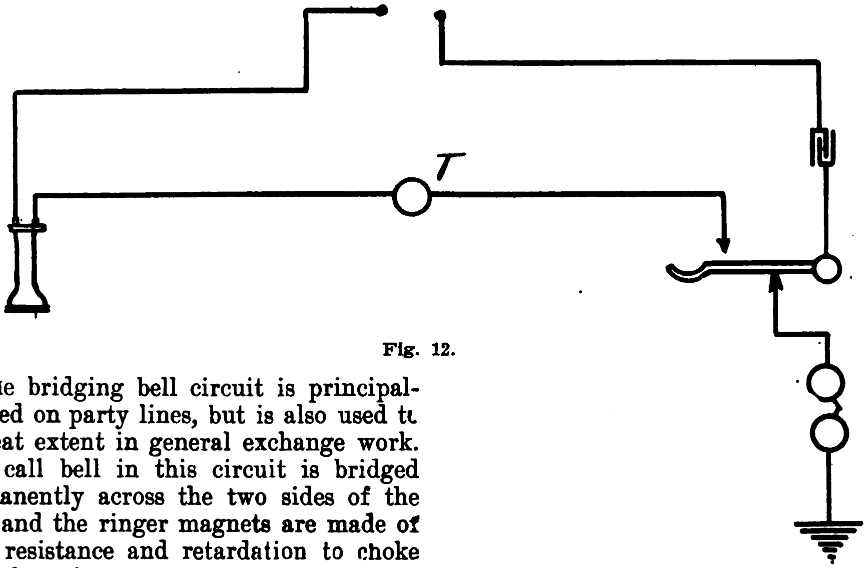

Fig. 12.

The bridging bell circuit is principally used on party lines, but is also used tc a great extent in general exchange work. The call bell in this circuit is bridged permanently across the two sides of the line; and the ringer magnets are made of high resistance and retardation to choke back the voice currents.

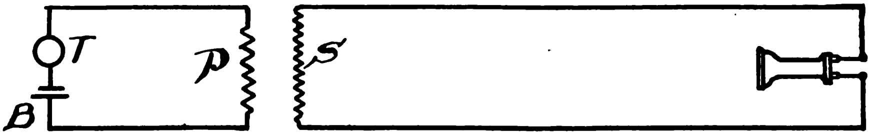

Fig. 4.

Fig. 8 shows a circuit of the wiring for a swinging desk set, series, wires or cords between the heavy dots, A and B, dots signifying binding posts, are those contained in the tube or pipe comprising part of the instrument.

Figs. 9, 10 and 11 are practically self-explanatory, being the instrument circuits of a Common Battery Call Board, the signal of which was described in the August number of the Telephone Magazine, central being called by pushing the button shown.

bers of a Kennel Club that are, no doubt, still waiting for a certain essay on testing which they can have the pleasure of reading sometime in the near future.

There have been wireless telephony experiments and circuits for same patented in the last few years, which, while most of them are still in an embryo state, may yet some day bring forth great results; so who is there who can prophecy what the crowning achievement of this wonderful twentieth century in the field of telephony will be?

Digitized by Google

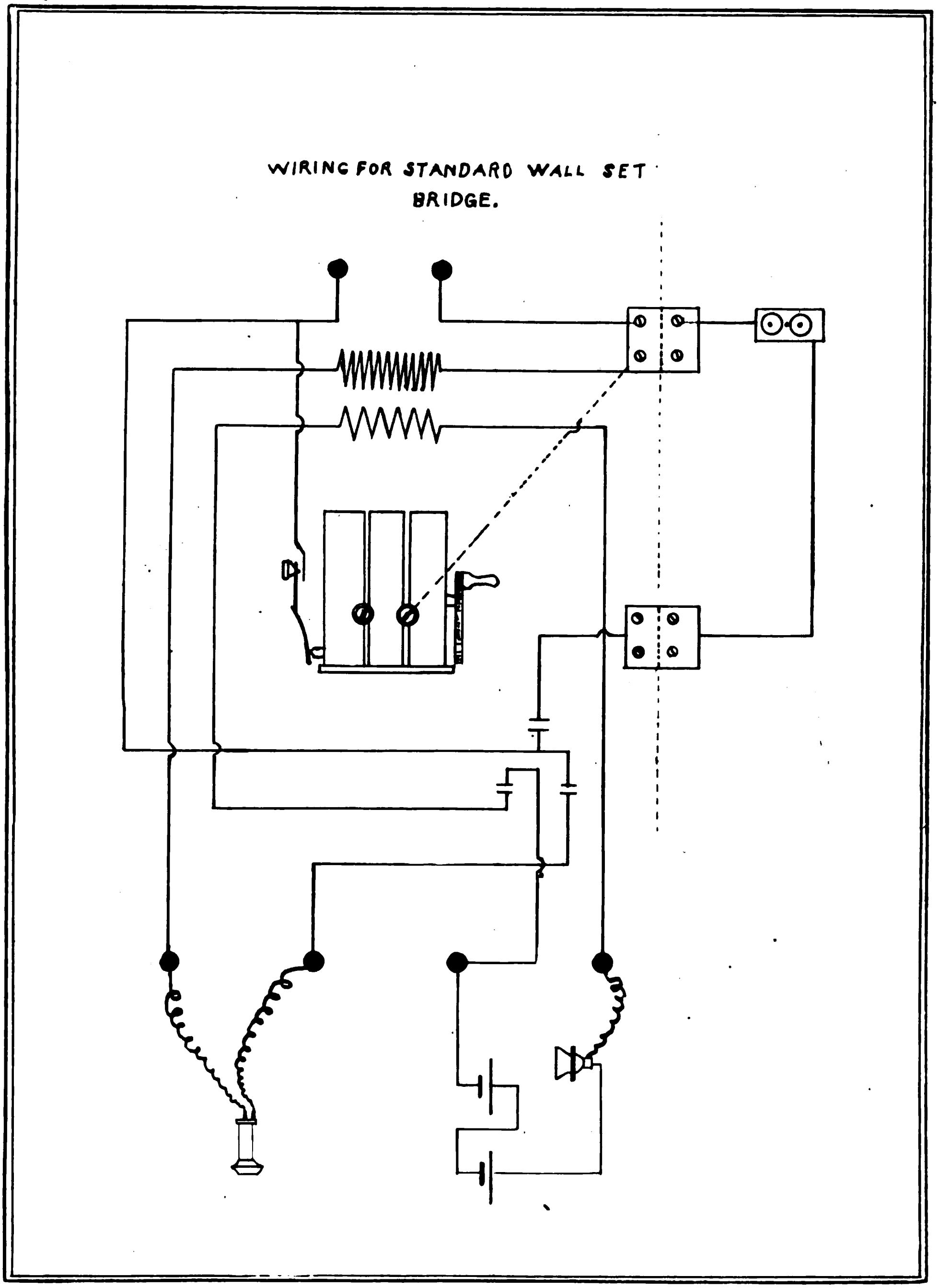

Diagram Showing Wiring for Standard Wall Set Bridged.

Digitized by Google

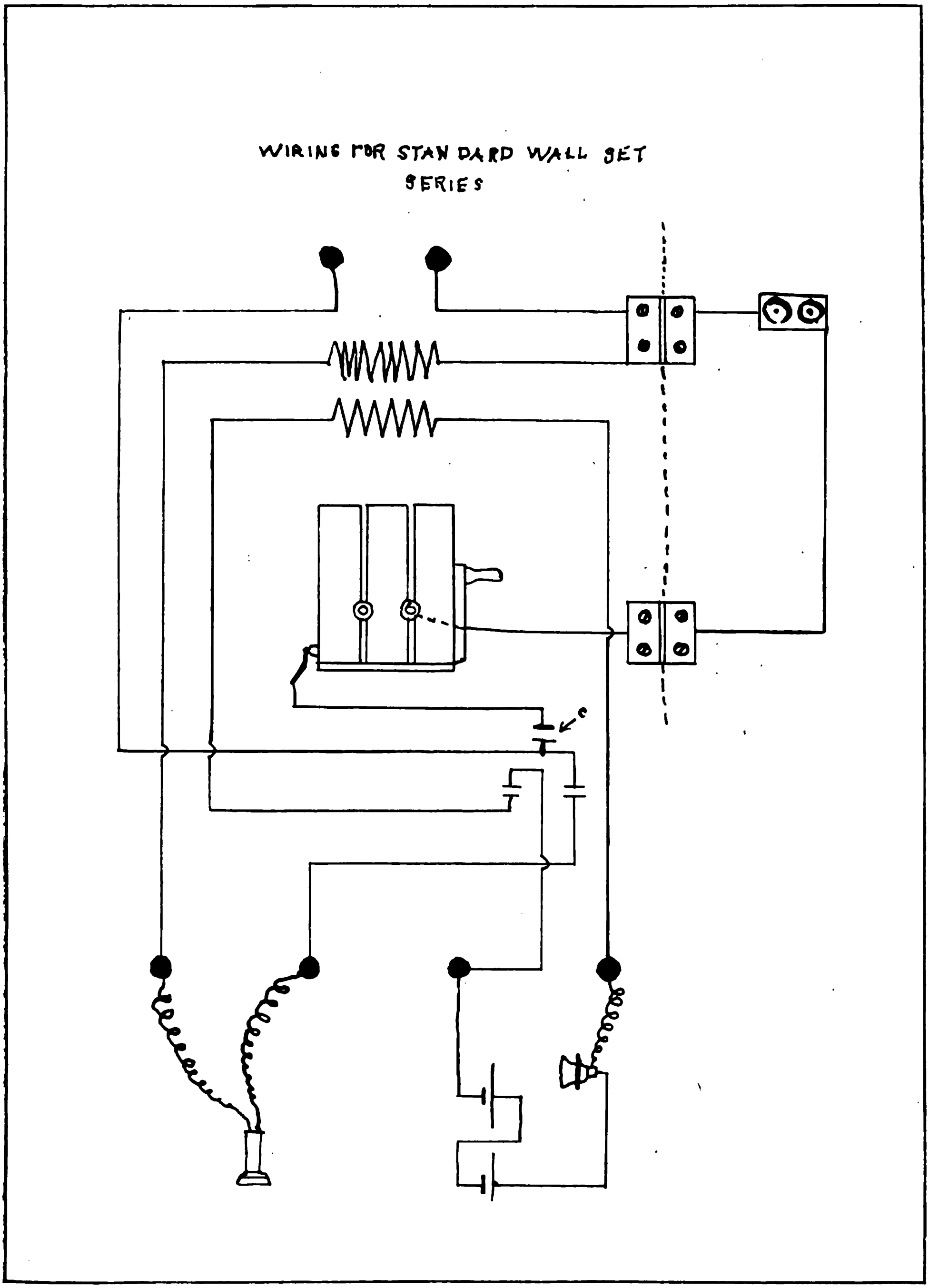

Diagram Showing Wiring for Standard Wall Set Series.

Digitized by Google

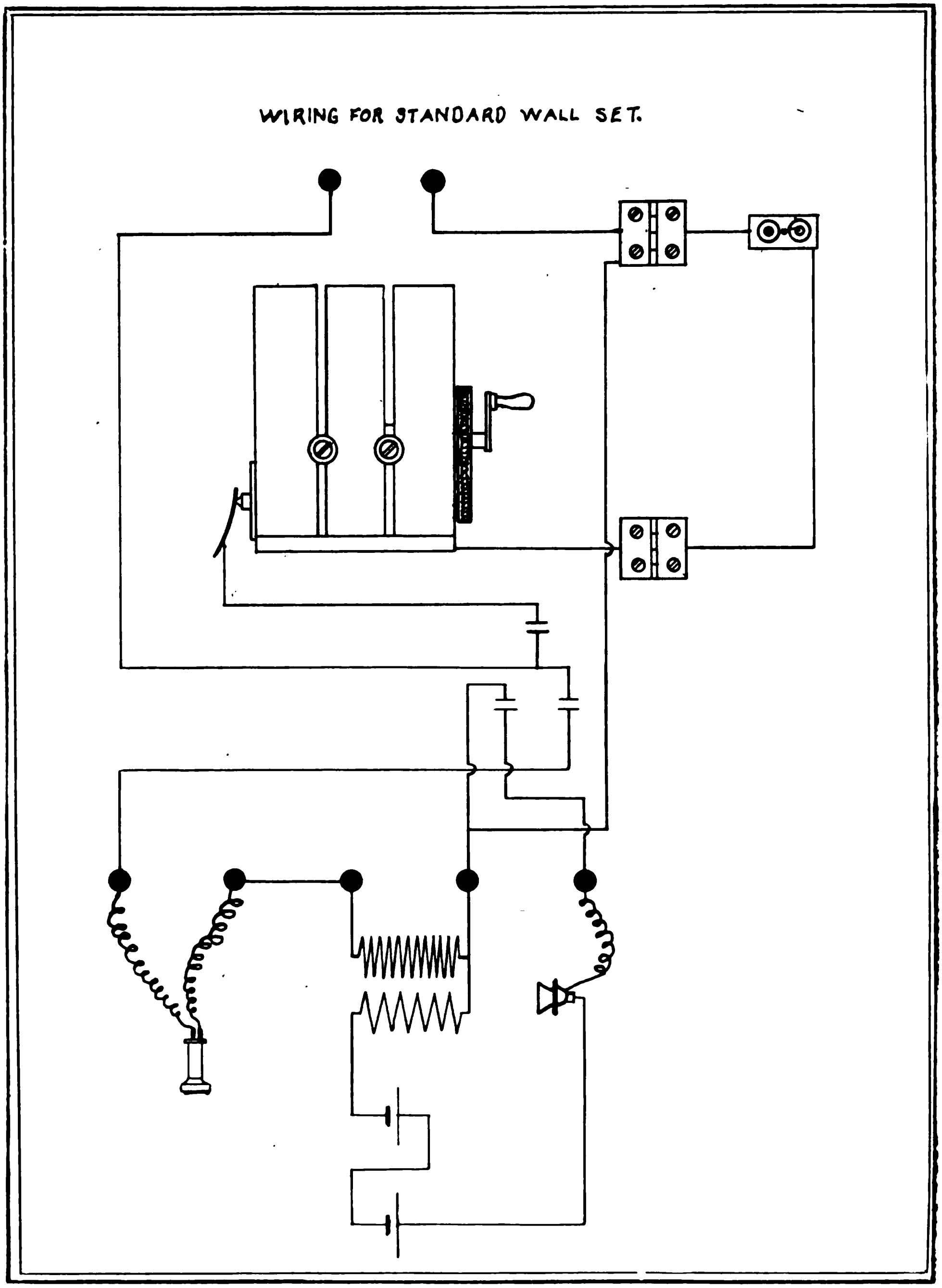

Diagram Showing Wiring for Standard Wall Set.

Digitized by Google

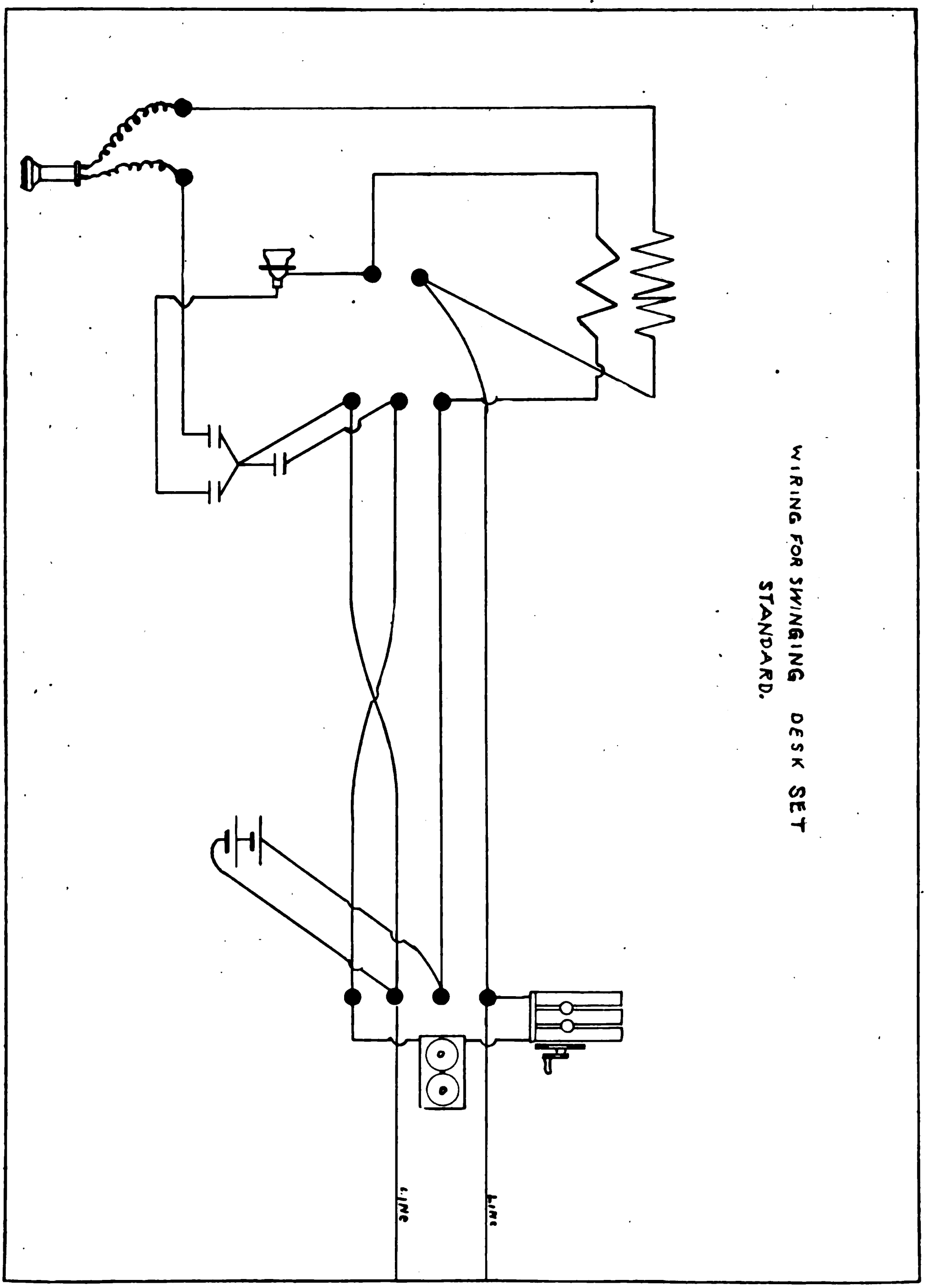

Diagram Showing Wiring for Swinging Desk Set Standard.

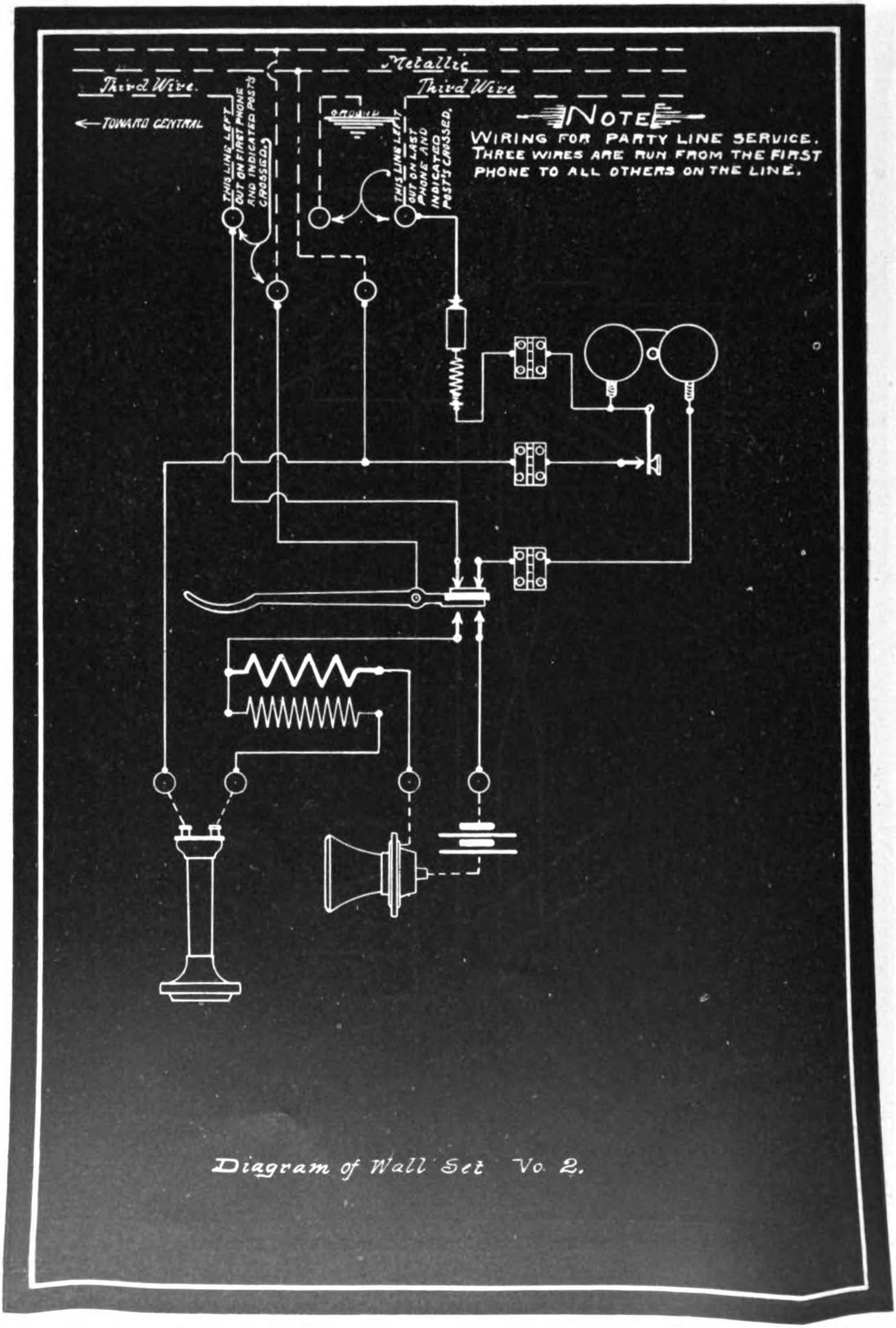

Diagram of Wall Set No. 2.

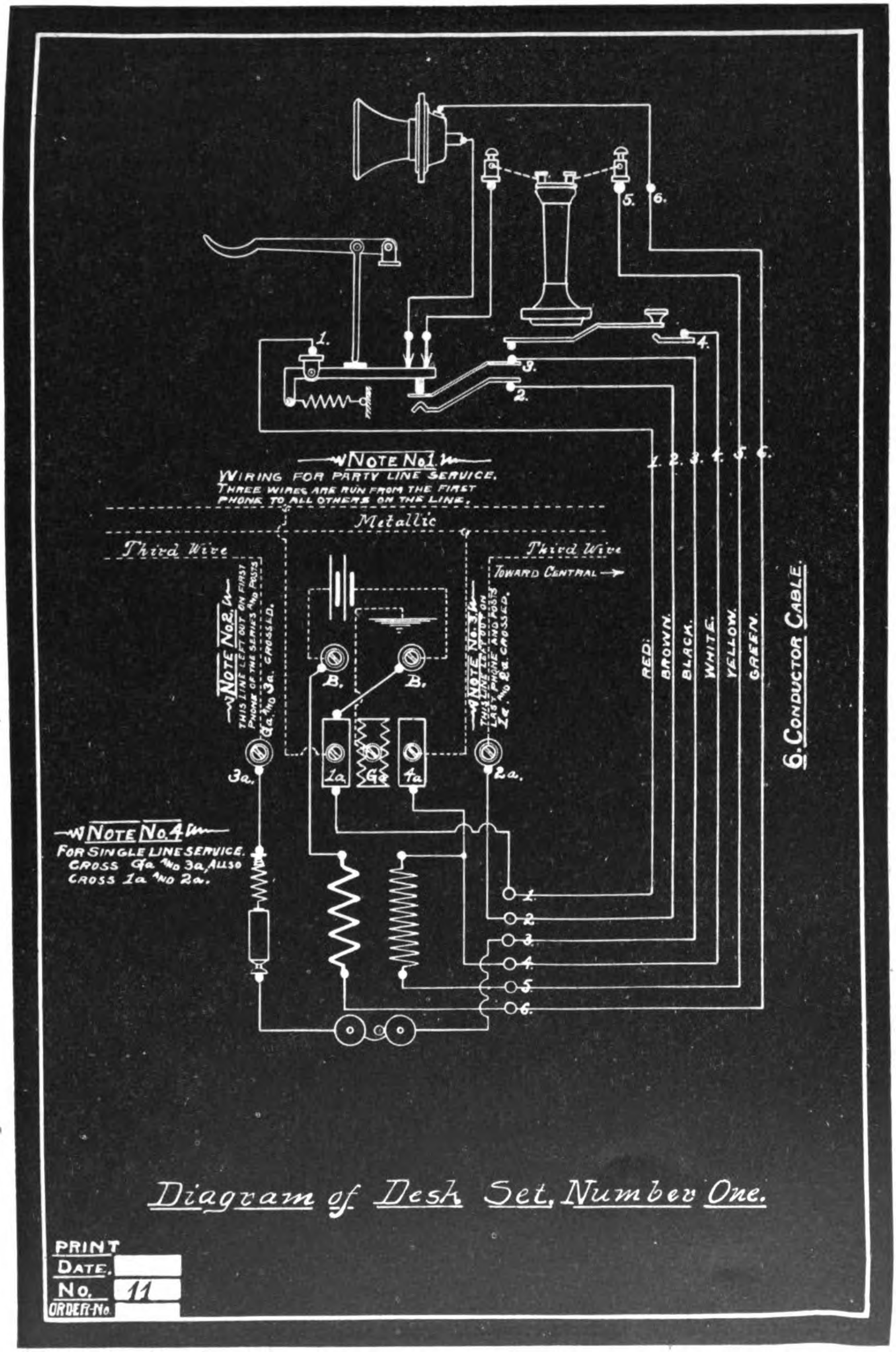
1.
2.
3.
4.
5.
6.
NOTE No. 1.
WIRING FOR PARTY LINE SERVICE.
THREE WIRES ARE RUN FROM THE FIRST PHONE TO ALL OTHERS ON THE LINE.
Metallic
Third Wire
Third Wire
TOWARD CENTRAL →
NOTE No. 2.
THIS LINE LEFT OUT ON FIRST PHONE OF THE SERIES AND POSTS Ga AND 3a. CROSSED.
NOTE No. 3.
THIS LINE LEFT OUT ON LAST PHONE AND POSTS 1a AND 2a CROSSED.
B.
B.
3a.
1a
Ga
4a
2a.
NOTE No. 4
FOR SINGLE LINE SERVICE.
CROSS Ga AND 3a, ALSO
CROSS 1a AND 2a.
1. 2. 3. 4. 5. 6.
RED.
BROWN.
BLACK.
WHITE.
YELLOW.
GREEN.
6. CONDUCTOR CABLE.
Diagram of Desk Set, Number One.
PRINT
DATE.
No. 11
ORDER-No.

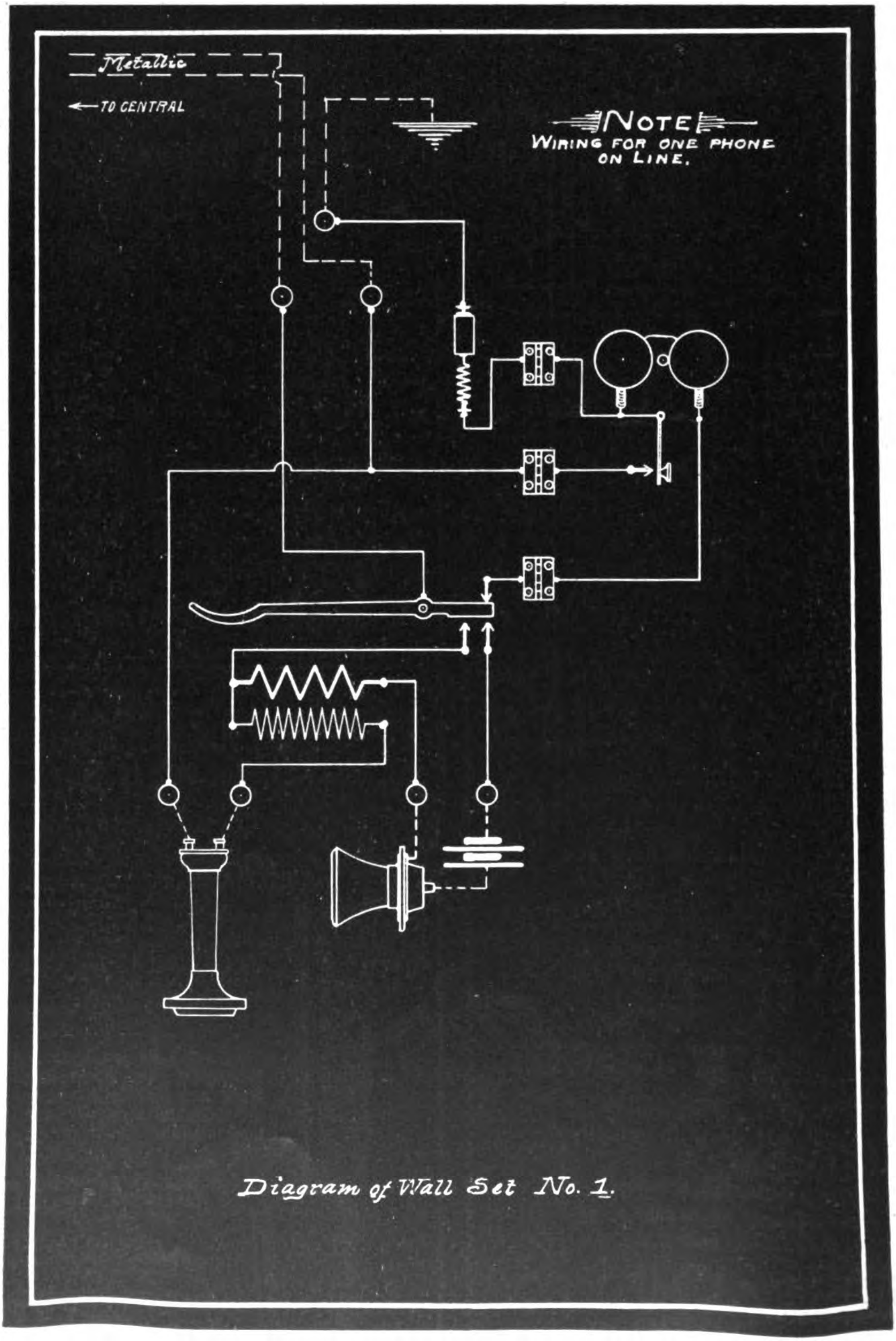

Diagram of Wall Set No. 1.

Digitized by Google

THE BLUE BOOK OF COMMERCE

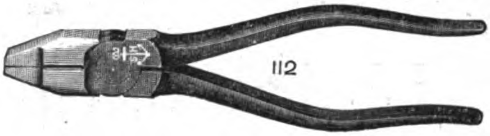

Is the Green Book of Hardware Specialties. Only the best have entree. That's how the Flat Nose Side Cutting Plyer got catalogued. It's the best. Look it up.

UTICA DROP FORGE & TOOL CO.,
Manufacturers of Nippers and Plyers.

THE SMITH & HEMENWAY CORP.
Manufacturers of Cutlery and Hardware Specialties.

ADDRESS

296 Broadway - - - NEW YORK CITY

AN ERICSSON ?

YES, AND IT IS "STANDARD OF THE WORLD"

Switchboards of all sizes; telephones for all uses and full exchange equipment. We help new companies to start right and old exchanges to improve.
We can interest you. Write for particulars.

ERICSSON TELEPHONE CO., 296 Broadway, NEW YORK CITY.

RELAY SHELLS

We are supplying them in large quantities for progressive manufacturers. Companies installing central systems, covering thousands of subscribers, use them. They are drawn from stock make in our own Steel Mill.

We also make

MAGNET CORES

of a superior quality of Norway Iron thoroughly annealed.

Inquiries solicited.
Samples of work to responsible concerns.

FEDERAL MFG. CO.
THOMPSON FACTORY,
CHICAGO, ILL.

IWANS' PATENT IMPROVED
Post Hole AND Well Auger

THE BEST IN THE WORLD. The 10 and 12-inch are especially adapted for telephone and telegraph post holes.

West Bend, Iowa,
June 19th, 1902.

Gentlemen:—In reply to your letter of June 7th, will say that we have two of your 12-inch Patent Post Hole Augers, and we are well pleased with them. Two men can bore from 50 to 60 five-foot holes a day with each auger. Please ship us one more 12-inch auger at once, and oblige. Yours respectfully,
West Bend Telephone Co.

They will Save you Time and Money in your Construction Work and Give Satisfaction in All Kinds and Under All Conditions of Soil. : : : : :

FOR SALE BY HARDWARE AND IMPLEMENT JOBBERS AND DEALERS.

Write for Prices and Circular of our complete line of post hole augers and diggers.

Manufactured Exclusively by

IWAN BROTHERS
Box 104, Streator, Ill.

Please mention TELEPHONE MAGAZINE in writing to advertisers.

Four Party Line

SELECTIVE SIGNAL TELEPHONES

......FOR.....

Central Energy Systems

ANTICIPATING THE PRESENT GREAT DEMAND FOR TWO AND FOUR PARTY SELECTIVE SIGNALING TELEPHONES FOR USE IN CONNECTION WITH COMMON BATTERY OR CENTRAL ENERGY SWITCHBOARDS, THE AMERICAN ELECTRIC TELEPHONE COMPANY SECURED CONTROL OF VALUABLE PATENTS PERTAINING TO SELECTIVE SIGNALING APPARATUS.

PRIOR TO THE AMERICAN COMPANY SECURING THEIR PATENTS, SELECTIVE SIGNALING SERVICE FOR CENTRAL ENERGY WORK WAS, AT ITS BEST, A VERY UNSATISFACTORY PROPOSITION. IN THE WELL-KNOWN SYSTEMS OF SELECTIVE SIGNALING APPARATUS, THE USUAL PRACTICE IS TO USE TELEPHONES IN WHICH THE SIGNAL BELL IS SELECTIVELY POLARIZED—THAT IS TO SAY, THE SIGNAL BELL IS SO ARRANGED THAT IT WILL RESPOND ONLY TO CURRENTS PASSING THROUGH IT IN A CERTAIN DIRECTION, EITHER PLUS OR MINUS, DEPENDING UPON WHETHER THE BELL IS ARRANGED TO OPERATE WHEN A CURRENT IN A MINUS OR PLUS DIRECTION IS SENT THROUGH IT.

HAVING EXPERIENCED ALL OF THE ABOVE DIFFICULTIES AND PRACTICALLY ABANDONED FOUR-PARTY LINE SELECTIVE WORK, THE AMERICAN ELECTRIC TELEPHONE COMPANY OBTAINED CONTROL OF THE LEICH SELECTIVE SIGNALING PATENTS. THIS SYSTEM OVERCAME EVERY ONE OF THE OBJECTIONS PREVIOUSLY PRESENT IN THE SELECTIVELY POLARIZED SYSTEM.

SEE OUR NEW SELECTIVE PARTY LINE SYSTEM

FOR FARMERS' LINES—A LARGER NUMBER CAN BE USED ON ONE LINE AND HAVE PRIVATE COMMUNICATION AND SELECTIVE RINGER.

SOMETHING NEW. FOR PARTY LINES.

ANY NUMBER OF TELEPHONES CAN BE USED ON A METALLIC LINE. — PERFECTLY SELECTIVE RINGING AND TALKING.

SEND FOR CIRCULAR AND PRICES.

American Electric Telephone Co.

36 to 58 West Jackson Boulevard, Chicago, U. S. A.

Digitized by Google

THE DEPENDABLE KIND

AMERICAN SAMSON BRIDGING

No. 36.

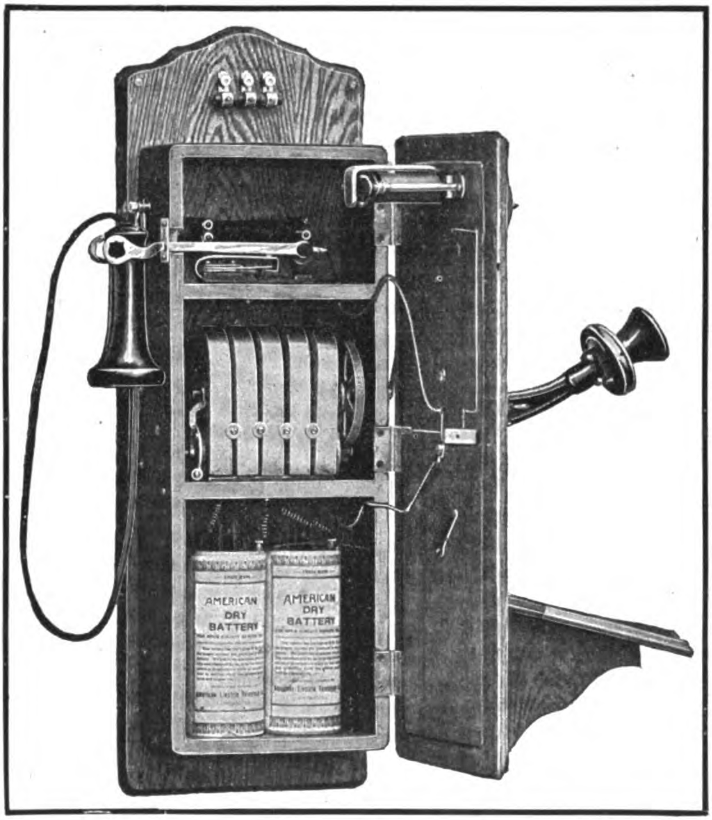

American Samson Bridging Telephone equipped with the well-known Gold Electrode Transmitter, Bell Style Receiver, with concealed cord connections, self-contained switch hook, patented lightning arrester, silk insulated ringer coils wound to 1,600 ohms and with a Samson 5-bar Bridging Generator, making it one of the most powerful and efficient telephones on the market :: ::

MANUFACTURED BY AMERICAN ELECTRIC TELEPHONE COMPANY, CHICAGO.

Digitized by Google

Nungesser Primary Batteries.

Our improved No. 4, 300 ampere-hour Closed Circuit Battery is the most powerful battery of this class. It is put up in both glass and porcelain jars. This battery is very largely used for telephone exchange service, central energy systems, gas and gasoline engine ignition, railway signals, etc.

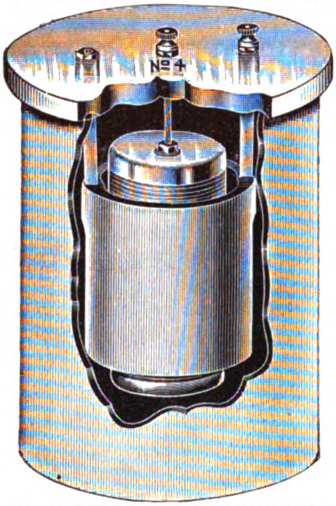

No. 4—SIZE 5½ in. dia. x 7½ in. high.

THE 1900 DRY BATTERY

Is manufactured Expressly for Telephone Exchange Service. In every comparative test made within the past four years, the 1900 Dry Battery has proven its superiority over all other dry or wet batteries. This battery has shown, in many of the most progressive telephone exchanges in this country, over there years' continuous service, without attention of any kind. They are now more largely used than all other dry or wet batteries combined.

OUR PRICES ARE THE LOWEST.

MANUFACTURED BY THE

Nungesser Electric Battery Co.,

CLEVELAND, OHIO, U. S. A.

Western Representative, THOMAS C. GRIER, 126-130 Jackson Boulevard, Chicago, Ill.

SIZE, 2½ in. dia. x 6 in. High.

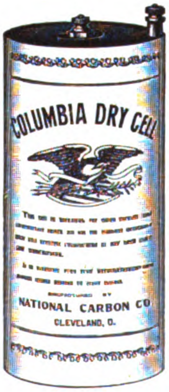

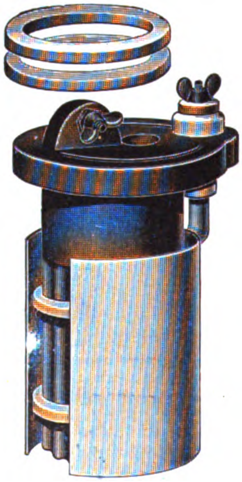

The Columbia will do more work, last longer, and give better satisfaction than ANY other dry cell.

The same is true of the National No. 2 Cell, compared with other wet cells.

With our cells you can better your service, and cheapen cost of maintenance. Write for prices and particulars.

LOCK DRAWER "L"
CLEVELAND, OHIO

National Carbon Co.

Digitized by Google

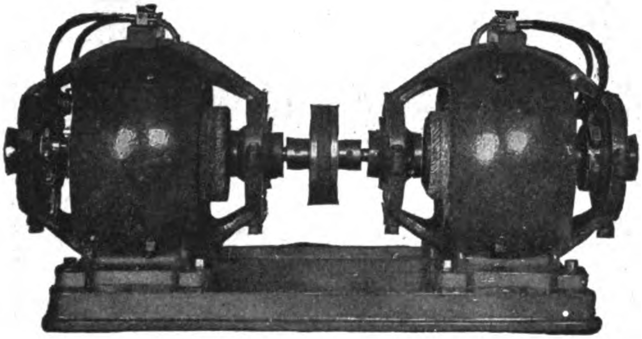

TWIN CHARGING MOTOR-GENERATOR!

TELEPHONE POWER APPARATUS OF EVERY DESCRIPTION

Our Line will fill all your wants

Charging Outfits
Ringing Generators
Special Telephone Power Apparatus
Send for Bulletin No. 147

ROTH BROS. & CO.

88-92 W. Jackson St., CHICAGO, ILL.

The Operator Pulls the Handle

The instrument substracts the time a toll conversation commenced from the time it was finished, and prints the length of the talk in minutes and quarter minutes.

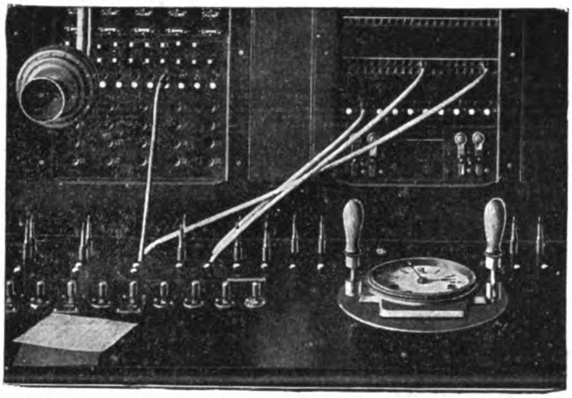

It Makes No Clerical Errors

THE CALCULAGRAPH!

It will earn enough to pay a dividend on your capital stock
For sale by all manufacturers of switch boards and by

The Calculagraph Company

9-11-13 Maiden Lane NEW YORK CITY

Gordon Cells Extensively Used by Leading Telephone Companies and Manufacturers

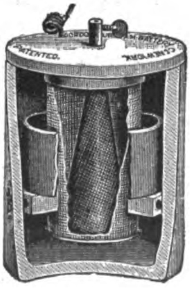

Guaranteed Long Life and Efficiency

Ask for Catalog and Discounts

Gordon Battery Co.

439-445 E. 144th Street NEW YORK

SWITCHBOARD CORDS
SILK CORDS

Any Style — For Any Purpose

PROMPT DELIVERIES

The McDermid Mfg. Co.

120 W. Jackson Boulevard, CHICAGO, U. S. A.

Digitized by Google

$4.50 VICTOR DESK STAND

WITH

Transmitter and Receiver

WHILE THEY LAST

VICTOR DESK STAND COMPLETE WITH GENERATOR BELL AND BATTERIES - - - - $9.00

VICTOR TELEPHONE WORKS

203-207 So. Canal St., Chicago, Ill, U. S. A.

Keystone Electric Telephone Co.

MANUFACTURERS OF HIGH-GRADE

TELEPHONES AND SWITCHBOARDS

TOLL LINE EQUIPMENT

Exchanges Equipped in Every Detail

WRITE FOR PRICES

Office and Factory, 565 Old Ave., PITTSBURG, PA.

Digitized by Google

SPECIFY THE "Chloride Accumulator" FOR TELEPHONE WORK.

THE ELECTRIC STORAGE BATTERY CO.

PHILADELPHIA

PHILADELPHIA Allegheny Ave. & 19th St.
NEW YORK 100 Broadway
BOSTON 60 State St.
CHICAGO Marquette Bldg
BALTIMORE Continental Trust Bldg.
ST. LOUIS Wainright Bldg
CLEVELAND New England Bldg.
SAN FRANCISCO Nevada Block
DETROIT Michigan Elect Co
HAVANA, CUBA G F Greenwood, 34 Empedrado St.

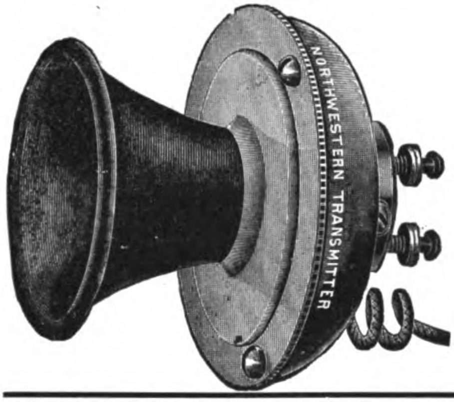

NORTHWESTERN TELEPHONE MANUFACTURING CO.

We make Telephones for the Wholesale and Supply Trade

ANY STYLE, AND PARTS FOR ALL TELEPHONES.
WORKMANSHIP GUARANTEED.
SEND FOR PRICES.

Address 191 to 193 S. Canal St., CHICAGO.

CROSSARMS

Compare the cost of your telephone instruments with the cost of your poles and crossarms. Hadn't you better give little thought to the crossarms? We manufacture Florida Heart Pine Crossarms.

LET US SUBMIT FIGURES.

THE STANDARD POLE & TIE CO., 44 Broad St. New York City.

FOR SALE!

225 SECOND-HAND GENERATORS

Further particulars inquire

J. C. MARSH, MARSHFIELD, WIS.

THE
Plume & Atwood Mfg. Co.
199 Lake St., CHICAGO, U. S. A.

BRASS, COPPER
AND
GERMAN SILVER
IN
Sheet, Rods, Wire, Brazed and Seamless Tube

A POPULAR SCIENTIFIC WEEKLY JOURNAL

ELECTRICITY AND ELECTRICAL ENGINEERING

The Most Successful Medium for Advertising in the United Kingdom

WRITE FOR SAMPLE COPY AND ADVERTISING RATES

2 EXETER ST. STRAND LONDON, ENGLAND

ELECTRICAL ENGINEERING PUBLISHING CO., Marquette Building, Chicago, Ill.
Telephone Magazine Publishing Co., Medinah Temple, Chicago, Ill.

Digitized by Google

INDEX TO ADVERTISEMENTS.

	PAGE
American Electric and Automobile Patents—Publication	XII
American Electric Telephone Co.—Telephones	XIII
American Electric Telephone Co.—Selective Signal Telephones	XII
Bulkley, Chas. C.—Patent Lawyer	X
Chicago Edison Co.—Electric Lighting Supplies	III
Chicago Insulated Wire Co.—Bare and Insulated Wires	X
Conley Foil Company—Tin Foil	X
Connecticut Insulating Wire Co.—Magnet Wire	II
Cook, Frank B.—Protective Apparatus	IV-V
Crawfordsville Wire & Nail Co.—Telephone Wires.	II
Croselmire & Ackor—Refiners	II
Electrose Manufacturing Co.—Telephone Specialties	II
Electric Storage Battery Co.—Accumulators	XVII
Electricity (London)—Newspaper	XVII
Ericsson Telephone Co.—Microphones	XI
Farr Telephone & Construction Supply Co.—Telephone Supplies	VI-VII
Federal Manufacturing Co.—Relay Shells	XI
Gordon Battery Co.—Batteries	XV
Illinois Electric Specialty Co.—Pole Changers	XX
International Telephone Mfg. Co,—Telephones	VIII-IX
Iwan Bros.—Post Hole and Well Augers	XI
Jukes & Shafer—Japanners	II
Keystone Electric Telephone Mfg. Co.—Telephones.	XVI
Klein, Mathias & Son	X
Lamerson, Frank J.—Polishing Cream	II
Menominee Electric Mfg. Co.—Magnato Generators	III
McDermid Mfg. Co.—Magnet Wire	XV
National Carbon Co.—Batteries	XIV
New York Insulated Wire Co.—Rubber-covered Wires and Cables	X
Northwestern Tel. Mfg. Co.—Telephones	XVII
Nungesser Electric Battery Co.—Batteries	XIV
Okonite Co., Ltd	X
Pacific Electric Co.—Telephone Intensifiers	XVII
Plume & Atwood Mfg. Co.—Brass, Copper and German Silver	XVII
Robinson, J. E., Electro Metallurgist	II
Roth Bros. & Co.—Power Apparatus	XV
Royal Trust Company	X
Situations Wanted	
Special Offer	
Standard Underground Cable Co.	X
Speer Carbon Co.—Carbon Specialties	II
Swedish-American Telephone Co.—Telephones	V
The Calculagraph Company—the Calculagraph	XV
The Kents Express & Teaming Co.—Heavy Teaming	X
The Smith & Hemenway Corp.	XI
Utica Drop Forge & Tool Co	IX
Victor Telephone Works—Desk Stands	XVI
Weston Elec. Instrument Co.—Testing Instruments	III

IN THIS ISSUE

The Newspaper and the Telephone. By Fred De Land 177
What Constitutes a House Organ? By W. B. Getty 182
The International Conference on Wireless Telegraphy 184
New Wireless Telegraph System 184
The Interstate Telephone Convention 185
Telephone Congress in the Northwest 186
New Telephone Company for Michigan 187
Telephone Company Pays 188
Editorial 189
Talks and Cross Talks 189
Freight Service and Telephone Service 189
Fraudulent Orders 190
Has a Company That Right? 190
Kansas Always a Corker 191
Personal 191
Literary Notes 191
Automatic Electric Company (Illustrated) 194
Stromberg-Carlson Mine Railway Telephone Set (Illustrated) 194
Kellogg Switchboard and Supply Company (Illustrated) 196
Digest of Telephone and Kindred Patents. By Arthur F Durand (Illustrated) 197
Independent Telephone Association Directories 213
Sues Telephone Company 215
Circuits of Standard Telephone Sets. By F. A. Wegner. (Illustrated) 216

Digitized by Google

WE ONLY MANUFACTURE AND SELL

MAGNETO GENERATORS

To Telephone Manufacturers Only

BUT

We Sell More of Them Than Anyone Else In The Business and Positively

GUARANTEE EVERY ONE WE SELL

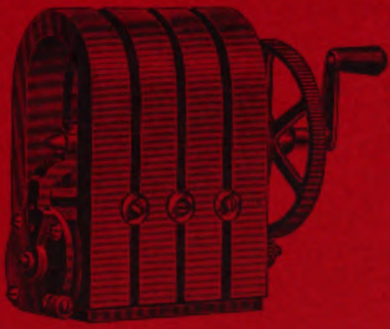

EXCHANGE OWNERS SHOULD ALWAYS SPECIFY A MENOMINEE GENERATOR WHEN ORDERING MAGNETO TELEPHONES

And Your Signaling System Will be Perfect.

Remember the name *MENOMINEE*

MENOMINEE ELECTRIC MFG. CO.

MENOMINEE, MICH.

Digitized by Google

You Should SEE IT

WHAT'S IT?
THAT'S IT!

The I. E. S. Pole Changer.

Our Patents all Allowed. Guaranteed free from infringement and warranted to give satisfaction. See all our specialties at the Convention.

Illinois Electric Specialty Co.

170 E. Madison Street
CHICAGO

Digitized by Google

The TELEPHONE MAGAZINE

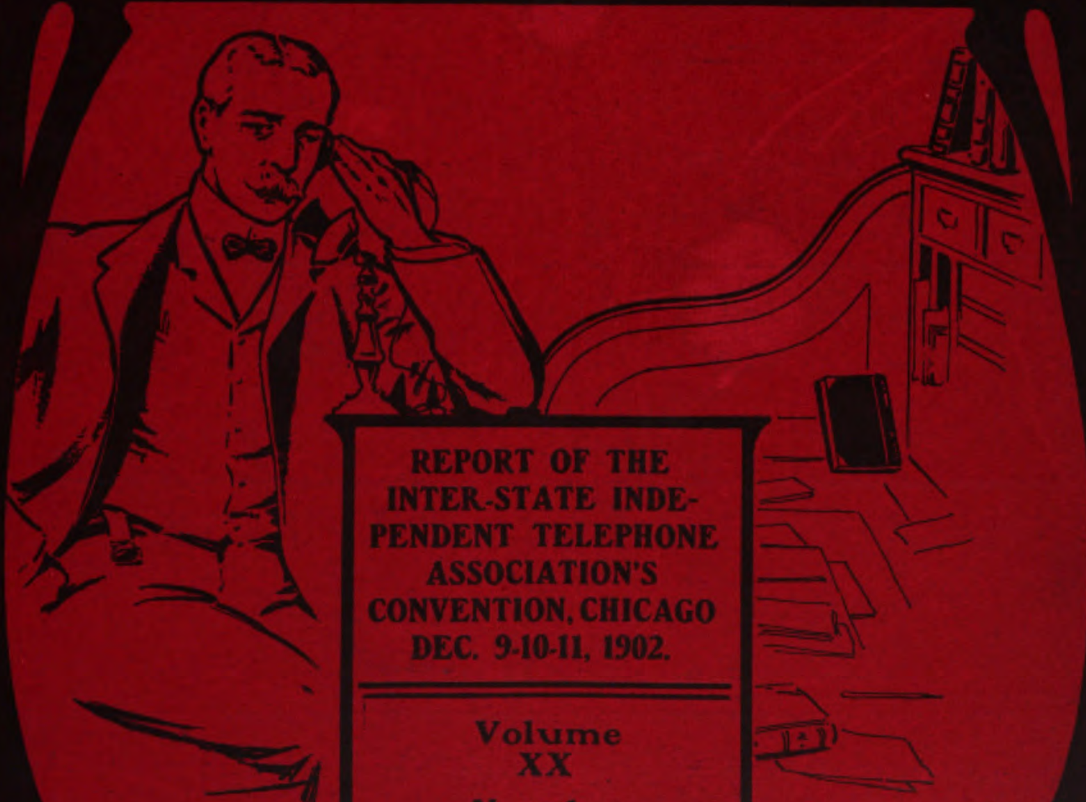

REPORT OF THE INTER-STATE INDEPENDENT TELEPHONE ASSOCIATION'S CONVENTION, CHICAGO DEC. 9-10-11, 1902.

Volume XX

Number 135

DECEMBER 1902

$1.00 Per YEAR

Published Monthly by

Telephone Magazine Publishing Co.,

Monon Bldg., Chicago Illinois.

10c Per COPY

FOR INDEX TO ADVERTISERS AND TABLE OF CONTENTS SEE PAGE XXII.

THE CONNECTICUT INSULATING WIRE CO.

Manufacturers of MAGNET WIRE.

Sizes No. 14 to No. 40, Cotton or Silk, Single or Double carried in stock in Chicago.
We manufacture fine sizes of Magnet Wire for Telephone Manufacturers.

Phone Harrison 3262. CHICAGO OFFICE: 1501 Monadnock.

ELECTROSE MFG. CO.

Manufacturers of **TELEPHONE SPECIALTIES**

Receiver Shells—all kinds—Mouth Pieces, Telephone Knobs and Key Handles, Generator Crank Handles, Bushings, Socket Nipples, Etc., Etc.

Phone Harrison 3262 CHICAGO OFFICE, 1501 Monadnock Block.

CROSELMIRE & ACKOR

Gold, Silver and Platinum REFINERS

Platinum in Sheet or W re for all purposes. Platinum Scraps Purchased

Phone Harrison 3262 CHICAGO OFFICE, 1501 Monadnock Block

CRAWFORDSVILLE WIRE & NAIL CO.

MANUFACTURERS OF

STEEL, B. B. and EXTRA B. B. GALVANIZED IRON WIRE.

We guarantee our wire to be equally as good as any manufactured and especially adapted for **TELEPHONE PURPOSES**

Phone Harrison 3262. CHICAGO OFFICE; 1501 Monadnock Block.

SPEER CARBON COMPANY

Manufacturer of

CARBON BACKS AND SPECIALTIES FOR TELEPHONES—ALSO LIGHTNING ARRESTER CARBONS OF EVERY DESCRIPTION .....

ST. MARYS, PA.

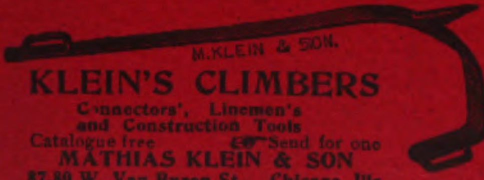

KLEIN'S CLIMBERS

Connectors', Linemen's and Construction Tools

Catalogue free ☞Send for one

MATHIAS KLEIN & SON

87-89 W. Van Buren St., Chicago, Ills.

THE KENTS'

EXPRESS AND TEAMING CO.

HEAVY TEAMING A SPECIALTY

Phone Harrison 668 and 3715

225 South Canal St. CHICAGO

DO YOU USE **"Polishing Cream?"** THE UP-TO-DATE CREAM of all POLISH

Especially adapted for TELEPHONES AND SWITCHBOARDS. Used and endorsed by the leading manufacturers.

Manufactured by FRANK J. LAMBERSON. JAPANNER and ENAMELER OF TELEPHONE PARTS.

Sample bottle if you mention "The Telephone Magazine."

173-175 South Clinton Street, CHICAGO.

JUKES & SHAFER

Special Attention Given to Manufacturing Trade

GENERAL JOBBING

JAPANNERS

Telephone Parts a Specialty

201 S. Desplaines Street Phone Monroe 228 CHICAGO

Digitized by Google

Weston Electrical Instrument Co.

Waverly Park, NEWARK, N. J., U. S. A.

PORTABLE
DIRECT READING

Voltmeters and Wattmeters

For Alternating and Direct Current Circuits.

The only standard portable instrument which deserves this name. Absolutely permanent, if not abused.

Portable
Direct Reading

**Voltmeters,
Milli-Voltmeters.
Ammeters,
Milli-Ammeters.**

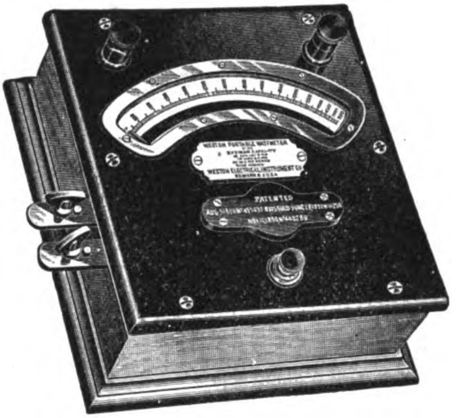

PORTABLE DIRECT READING WATTMETER FOR ALTERNATING AND DIRECT CURRENTS.

A NEW CATALOGUE
ON

**Voltmeters,
Potential
Indicators,
Ammeters**

FOR

Central Stations

AND

Isolated Plants.

**Highest Accurancy
Least Consumption
of Energy.**

SEMI-PORTABLE LABORATORY STANDARD VOLTMETERS AND AMMETERS.

The most accurate and most convenient absolute standard ever offered.

Correspondence Solicited.

BERLIN—European Western Electrical Instrument Co., Ritterstrasse No. 88.

LONDON—Elliott Bros., No. 101 St. Martins Lane.

The Operator Pulls the Handle

The instrument subtracts the time a toll conversation commenced from the time it was

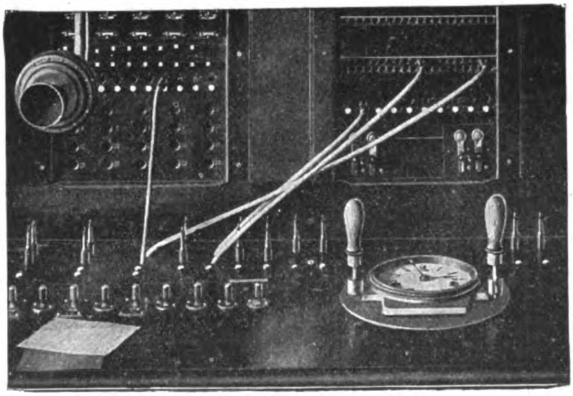

finished, and prints the length of the talk in minutes and quarter minutes.

It Makes No Clerical Errors

THE CALCULAGRAPH!

It will earn enough to pay a dividend on your capital stock
For sale by all manufacturers of switch boards and by

The Calculagraph Company

9-11-13 Maiden Lane NEW YORK CITY

Please mention TELEPHONE MAGAZINE in writing to advertisers.

Digitized by Google

COOK PROTECT

That Cook Protectors are standard is proven by the fact that they are in use
durability and efficiency. I not only give absolute protection against lightning
infringement suits, as *I own and have exclusive rights under my patents.*

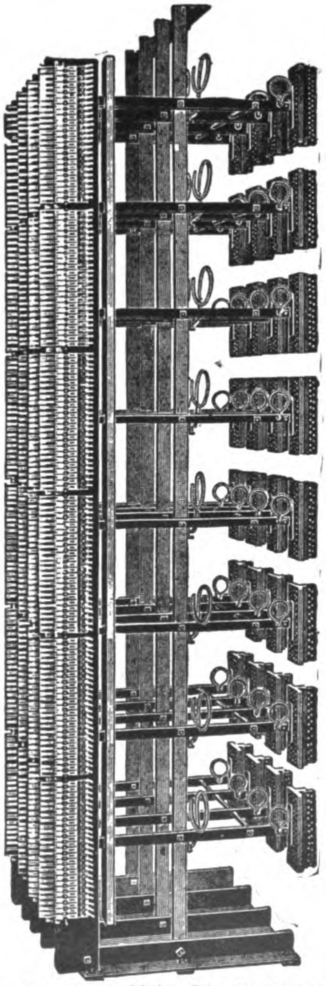

Type L.—Cook Main Distributing Iron Frame with Strong and Sneak Current Protectors. Patented May 20, 1890; July 8, 1902; Aug. 12, 1902; Aug. 12, 1902. Other patents pending. All sizes. Any capacity.

Type G.—Cook Tubular Line Fuse combined with carbon plate lightning arrester mounted on strips. Any number of pairs. Patented May 20, 1890; Oct. 21, 1902.

FRANK

MANUFAC

Pole Top Terminals, Combined Cable Termi-
Strong Current Protectors, Sneak Current

240-244 W. Lake St.,

Please mention TELEPHONE MAGAZINE in writing to advertisers.
Digitized by Google

ORS STANDARD

throughout the world. This should convince prospective purchasers of their and other foreign currents, but also protect my patrons from all liability of Complete Catalogue being compiled.

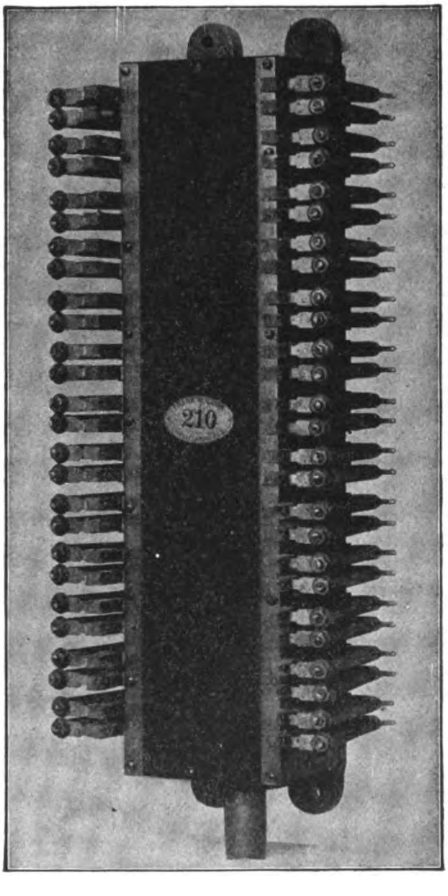

Type N.—Cook Pole Cable Terminal with Line Fuse and Carbon Plate Arrester. Patented May 20, 1890; Oct. 21, 1902. Other patents pending. All sizes, 25 to 100 pairs.

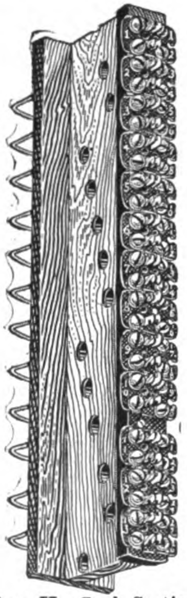

Type II.—Cook Sectional Distributing Board. All sizes, 100 to 2000 pairs capacity. Patented Oct. 15, 1901.

B. COOK

TURER OF

nals and Protectors, Lock-Out Cable Terminals, Protectors, Heat Coils, Distributing Boards.

CHICAGO, U. S. A.

Digitized by Google

INTERNATIONAL TELEPHONES

STAND UNEQUALLED
NEVER FALL DOWN

They Challenge the World's Past Champions to an INTERNATIONAL Contest.

No Exposed Metal Parts Form Any Part of the Circuit at Any Time.

CENTRAL ENERGY GENERATOR CALL **TELEPHONES**

OF ANY STANDARD STYLE

SWITCHBOARDS MULTIPLE TRUNKING

Central Energy, Lamp Signal, Double Supervisory for any size Exchange. Correspondence Solicited

International Telephone Mfg. Co.

Harrison and Clinton Streets, CHICAGO, U. S. A.

Digitized by Google

CHRISTMAS BELLS

ARE

MONARCH BELLS

They Bring Gladness to the Heart.

Why?

BECAUSE out of over 20,000 Monarch Magneto Bells turned out in the past two years less than a dozen have proven defective.

WE ORIGINATE

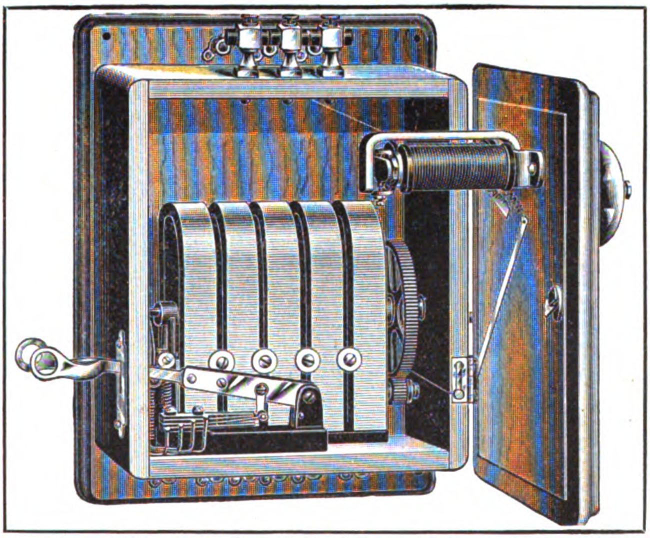

OTHERS IMITATE

Monarch 5-Bar Magneto. Guaranteed to Ring 100 Bells.

ASK US FOR OUR CHRISTMAS BULLETINS
OF

Telephones and Telephone Parts

Monarch Telephone Mfg. Co.

Canal and Randolph Sts. CHICAGO, ILLS.

Digitized by Google

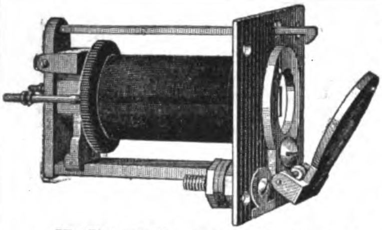

FARR TELEPHONE & CONSTRUCTION SUPPLY CO.

118 and 120 WEST JACKSON BLVD.,

CHICAGO.

MANUFACTURERS AND DEALERS

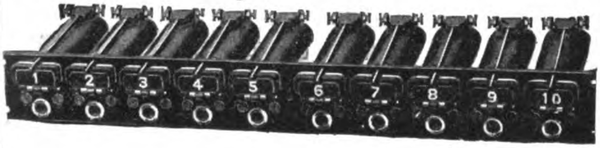

TELEPHONES, SWITCHBOARDS, DROPS, PLUGS, JACKS, CORDS, GENERATORS, BATTERIES, COILS, LINEMEN SUPPLIES, TOOLS, WIRE BRACKETS, PINS, CROSS ARMS, AND INSULATORS.

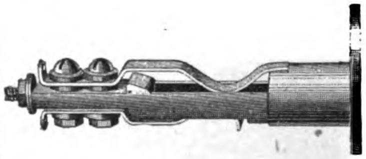

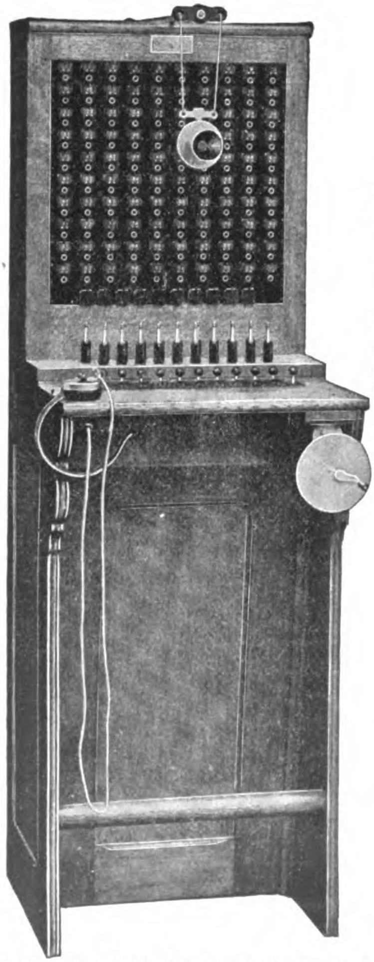

100 Drop Tubular Express Switchboard

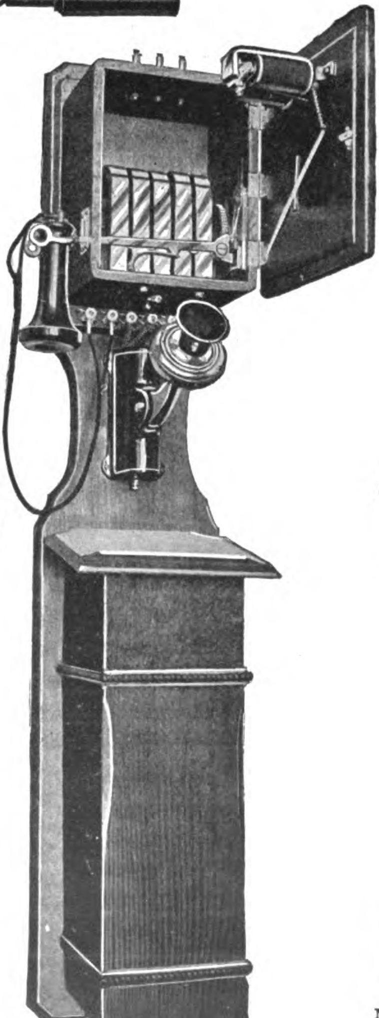

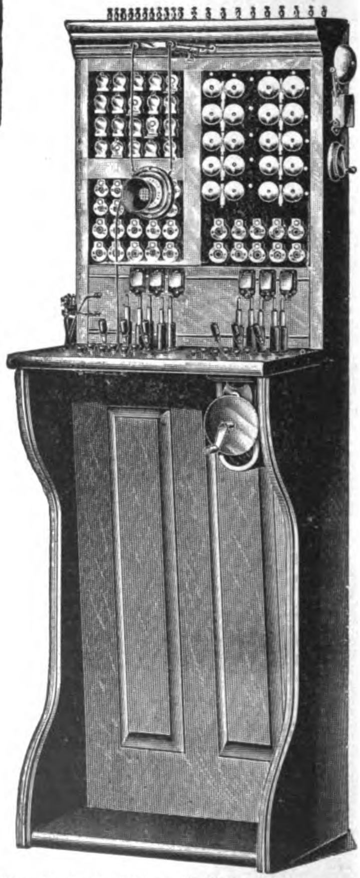

No. 1 Switchboard—Capacity 30 drops, with 20 drops and jacks mounted.

Please mention TELEPHONE MAGAZINE in writing to advertisers.

Digitized by Google

TELEPHONE SUPPLY HOUSE

SEND FOR OUR NEW 1903 CATALOGUE AND BOOK OF INSTRUCTION

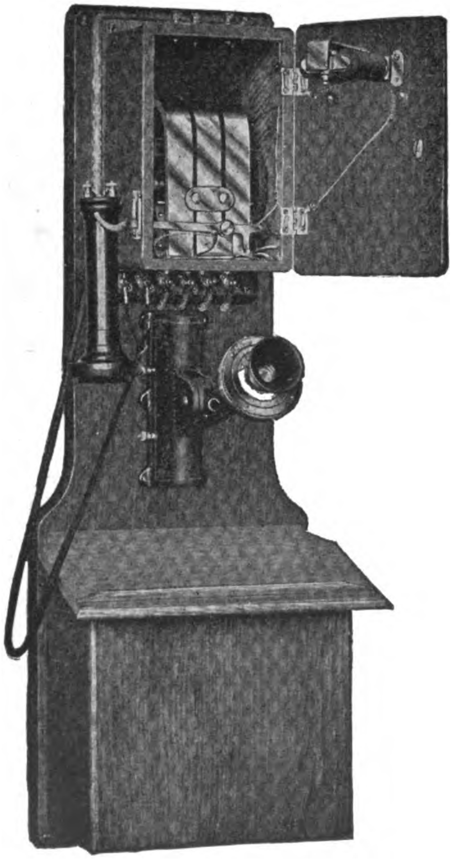

15 Different STYLES of TELEPHONES

WIRE ALL GRADES

CABLES

Batteries

Receivers

Transmitters

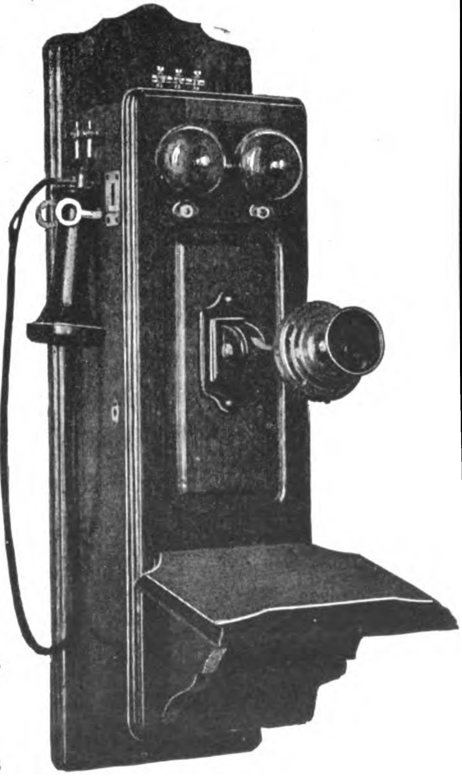

No. 7A Bridging 100,000 ohm.

No. 14 Bridging or Series.

Digitized by Google

SUBSCRIBE NOW!

The Telephone Magazine

for 1903

WILL BE THE BEST EVER PUBLISHED!

EACH number will contain many interesting and inst uctive articles by well known engineers and practical telephone men throughout the world on Exchange Construction and Operation, Telephone and Switchboard Apparatus, Toll Line, Line Construction, Rates, Protective Devices, Central Energy, Magneto and Automatic Systems, Telephone Troubles and How to Find Them, A Monthly Digest of Telephone and Kindred Patents, and General News from Independent Telephone Associations. All of which will interest anyone in the Telephone Business.

SUBSCRIBE NOW!

Fill out the blank below and enclose it in an envelope with a Dollar Bill, Postage Stamps or Money Order to

Telephone Magazine Publishing Co.

CHICAGO, ILL., U. S. A.

TELEPHONE MAGAZINE PUBLISHING CO.
Medinah Temple, Chicago, Ill., U.S.A.

....................190

Enclosed find $1.00, for which send The Telephone Magazine to the following address for One Year beginning with......................issue.

Name..................................

Subscription: ....Street

$1.00 per Annum. Town..........................

$1.50 Foreign Countries. State.....................

Digitized by Google

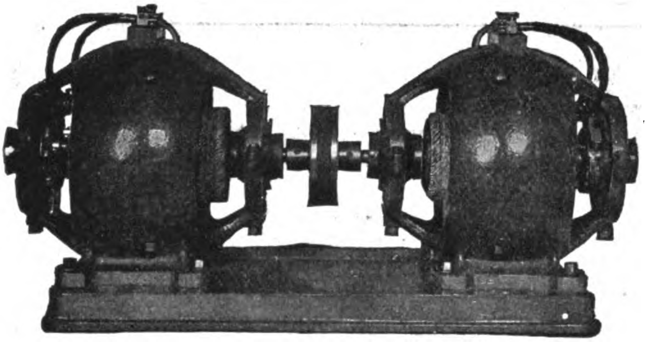

TWIN CHARGING MOTOR-GENERATOR

TELEPHONE POWER APPARATUS OF EVERY DESCRIPTION

Our Line will fill all your wants

Charging Outfits
Ringing Generators
Special Telephone Power Apparatus
Send for Bulletin No. 147

ROTH BROS. & CO.

88-92 W. Jackson St., CHICAGO, ILL.

THE

CONLEY FOIL COMPANY

TIN FOIL

FOR ELECTRICAL APPARATUS

521 to 541 West 25th Street, NEW YORK

THE CHICAGO

Telephone Holder

Holds the 'phone wherever wanted—out of the way or ready for use. Can be fastened to any desk, wall or partition. Leaves the desk slide free. Adjustable to any size base. The holder saves handling and avoids breaking. Retail price, $2.50. Write for our liberal inducements to the trade.

MANUFACTURED BY

Chicago Writing Machine Co.
F. W. PARDEE, *General Sales Agent.*
Room 426, 119 La Salle Street,
CHICAGO.

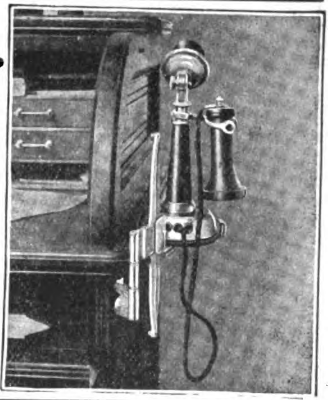

Gordon Cells Extensively Used by

Leading Telephone Companies and Manufacturers

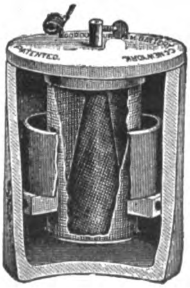

Guaranteed Long Life and Efficiency

Ask for Catalog and Discounts

Gordon Battery Co.

439-445 E. 144th Street NEW YORK

SWITCHBOARD CORDS
SILK CORDS

Any Style — For Any Purpose

PROMPT DELIVERIES

The McDermid Mfg. Co.

120 W. Jackson Boulevard, CHICAGO, U. S. A.

Digitized by Google

Six Years Without a Peer

We have installed the largest Magneto Call Board in the United States

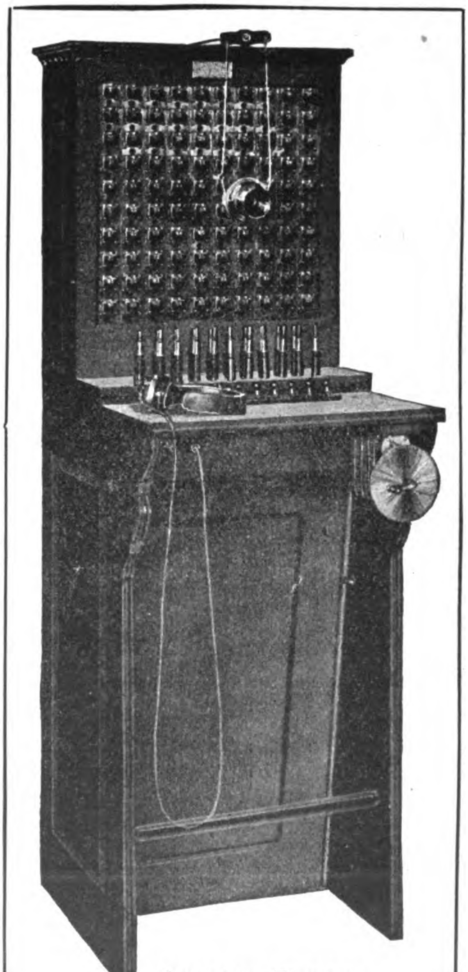

American Express.

We have installed the largest INDEPENDENT Toll Board in the World

MADE ONLY BY

American Electric Telephone Co.,

CHICAGO, ILL.

Digitized by Google

Increase Your Dividends

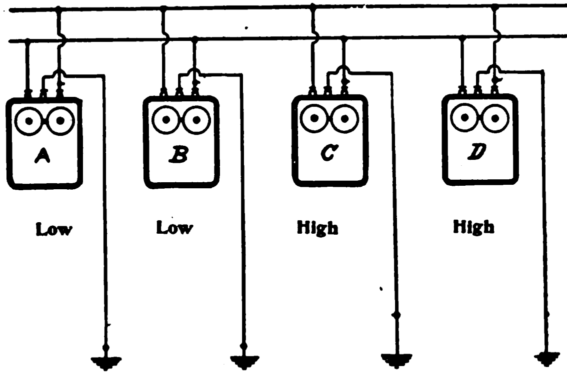

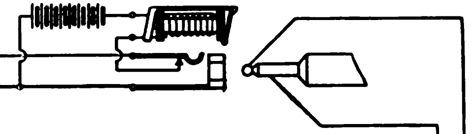

PERFECT

AC button is depressed for ringing regular telephones
A " " " telephone A
B " " " " B
C " " " " C
D " " " " D
R " " to release any of the others

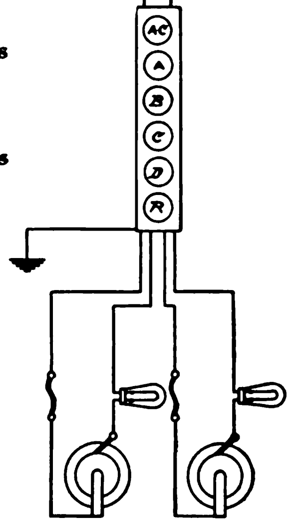

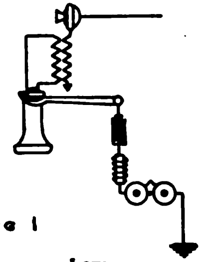

Fig 1

Low

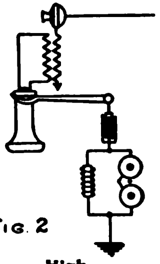

Fig. 2

High

4 Party Selective

AMERICAN ELECTRIC TELEPHONE CO.,
CHICAGO, ILL.

Willard L. Candee, H. Durant Cheever, } Managers.

1889, Paris Exposition—Medal for Rubber Insulation.
1893, World's Fair—Medal for Rubber Insulation.

Geo. T. Manson, Gen. Supt.
W. H. Hodgins, Secretary.

OKONITE TRADE MARK

THE OKONITE CO., Ltd.,

SOLE MANUFACTURERS OF

OKONITE WIRES, OKONITE TAPE, MANSON TAPE

CANDEE WEATHERPROOF WIRES.

253 Broadway. NEW YORK.

JONES & WINTER

DESIGN AND CONSTRUCT

Independent Telephone Exchanges

ANYWHERE IN THE UNITED STATES

Some of our recent installations:

Rockford Home Tel. Co., Rockford, Ill.
Paducah Ind. Tel. Co., Paducah, Ky.
Stephenson Co. Tel. Co., Freeport, Ill.
Monmouth Tel. Co., Monmouth, Ill.
Canton Home Tel. Co., Canton, Ill.
Citizen's Tel. Co., Racine, Wis.
The Wichita Tel. Co,, Wichita, Kan.
Jackson Home Tel. Co., Jackson, Tenn.
Galesburg Union Tel. Co., Galesburg, Ill.
Peru Home Tel. Co., Peru, Ind.
Citizen's Tel. Co., Pekin, Ill.
Monroe Tel. Co., Monroe, Wis.

Write them or us for Reference.

JONES & WINTER

1259 Monadnock Block, CHICAGO

Chicago Insulated Wire Co.

Factory: Sycamore, Ill.

Office: Lake and LaSalle Sts.,
CHICAGO, ILL.

Large stock constantly on hand of bare and insulated copper and iron wire, galvanized strand etc.

New York Insulated Wire Co.

CHICAGO BRANCH
192 South Desplaines Street
CHICAGO, ILL.

Makers of All Kinds of Rubber Covered Wires and Cables.

Main Office:
NEW YORK

Branches:
BOSTON
SAN FRANCISCO
CHICAGO

Standard Underground Cable Co.

BARE WIRE, INSULATED WIRE, CABLES.

Wire Cables and Accessories for Telephone use, a specialty.

FOR PRICES AND INFORMATION, ADDRESS

PITTSBURG, Westinghouse Bldg. NEW YORK, 56 Liberty St. PHILADELPHIA, 1225 Betz Bldg. CHICAGO, 322 Rookery. SAN FRANCISCO, Mills Bldg. BOSTON, 101 Milk St.

FACTORIES: Pittsburg, Pa, Oakland, Cal., Perth Amboy, N. J.

Please mention TELEPHONE MAGAZINE in writing to advertisers.

Digitized by Google

Telephone Magazine

Copyrighted, 1902, Telephone Magazine Pub. Co. Entered Chicago Postoffice as second class mail matter.

VOL. XX. CHICAGO, DECEMBER, 1902. No. 135.

SECOND CONVENTION OF THE INTERSTATE INDEPENDENT TELEPHONE ASSOCIATION.

The second convention of the Interstate Independent Telephone association, which proved to be the largest telephone gathering ever assembled, was held at the Auditorium Hotel, Chicago, Ill., December 9, 10, 11, 1902.

Nearly 700 telephone men responded to the call from Illinois and its eight neighboring states, Iowa, Ohio, Indiana, Michigan, Minnesota, Missouri, Kentucky and Wisconsin, which states form the association. Manufacturers from every part of the country were in attendance and the exhibits were very elaborate. The exhibitors had display rooms on the parlor floor and all of the sixth floor.

FIRST SESSION TUESDAY 2 P. M.

A large and attentive audience greeted President Raney when he called the meeting to order on the first session.

Mr. J. W. Keelyn, chairman of Chicago entertainment committee, introduced Hon. Lawrence E. McGann, controller of the city of Chicago, who represented the mayor in behalf of the city of Chicago, in welcoming the association to this city.

Mr. McGann delivered the following address:

Mr. Chairman and Gentlemen of the Interstate Independent Telephone Association: I am here to present the compliments of his honor the mayor, and say he regrets that he cannot be present with you, and to wish that your deliberations may be fruitful of good results. We know they will be. Independent and aggressive men cannot meet and consider the important subjects that you have under consideration without being productive of good results for yourselves and to the people at large. I am free to confess, I am concerned in the people at large more than to you. The laborer should be well paid for his hire, but I believe there yet remains to be developed in the means of popular communication so much that the subject that you have under consideration to-day is merely in its infancy, that the facilities for communication be so cheapened that they may be extended all over the country.

The necessity for that is recognized more by our people in the city, with our noise and our confusion and hustle to keep out of the way of being run

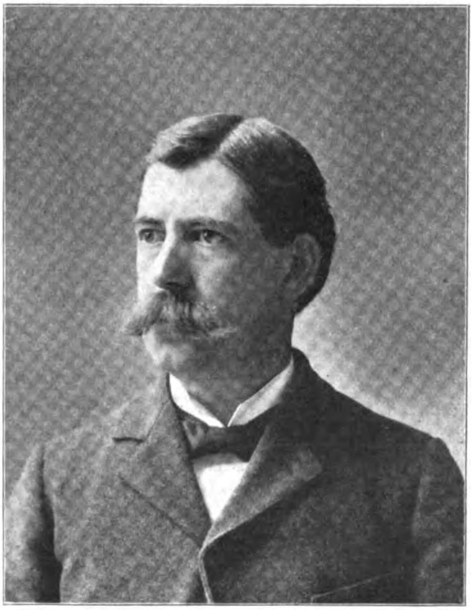

CHAS. E. HULL,
Of Salem, Ills., President Interstate Independent Telephone Association.

over, than it is in the smaller towns or country. But the principle is the same. The cold-blooded, plodding farmer has awakened, his nerves are high set, he is wasting more of life's efforts now than he thought of before, his profits are greater, his time more valuable, it is necessary that he save steps, and while sometimes in these delibera-

Digitized by Google

tions the broader question is lost sight of in the avarice of the principals, it is a bad policy, it is a short-sighted policy, it is a policy I am sorry to say is being practiced by the great public utility corporations of America to-day to their detriment and to the unrest of the people.

The generosity of the American people, of the American municipalities, in the grants to make possible the existence of corporations such as you gentlemen represent, has been so great that it has intoxicated the people; it has intoxicated the men of means in making their investments; they won't invest for a fair return; they must have fabulous returns. But your very meeting, your very existence as an organization indicates competition, indicates that in your efforts, while in your respective centers you may have a monopoly, and may be enjoying it, I hope it won't be long. But, while that condition exists, your existence suggests that this subject is getting thought by you and will invite thought by others, and all with a view of bettering humanity, to save the wear and tear of life, the destruction of nerve, and made so it may be applied to more valuable and pleasureable efforts of life. Personally I sincerely wish you the greatest possible success, and I wish to modify my first expression that my interest is not in you as much as in the laborers and people at large. I hope you will always be well paid for your efforts, but I emphasize what I said first that I am more interested in the outcome to humanity. I hope your stay in Chicago will be pleasant, and I extend to you in the name of the city of Chicago a hearty welcome.

OPENING ADDRESS OF PRESIDENT RANEY.

On behalf of the Independent Telephone men of nine of the greatest States in the Union, I most heartily thank you for the generous welcome extended to this convention. It is indeed an honor to receive such a welcome to this, one of the greatest cities in the world, probably the greatest when age and all other circumstances and conditions are taken into consideration. And we are doubly honored that this welcome is extended to us in such eloquent and appropriate language with such cordiality of expression by the honorable representative of this great city. The honor of a welcome to such a city is only equaled by the most honorable way in which it is extended to us.

For that welcome we return our most sincere thanks. And yet, Mr. Comptroller, I think that without egotism or undue exhaltation, we may say that such a welcome is not unworthily bestowed.

We are here to represent a business interest, in which, in the nine States represented in this convention, represent an invstment of at least one hundred millions of dollars. We represent the customers of business interests in your city, which employ ten million dollars of capital, furnisn labor for fifteen thousand of your citizens and which do an annual business of twenty millions of dollars.

And I submit to you, most honorable sir, whether or not, as a business proposition, we are not worthy of such a welcome as we have received.

But we are entitled to credit, not only as customers of great business interests in your city, but also for the work we are doing among the people of the States we represent.

Ten years ago the telephone business was in the hands of a gigantice and grasping monopoly, and the blessing and convenience of its use was limited to the favored few. Today, as the result of our efforts to give the common people the benefits of the inventive genius and business push of your citizens, the telephone is an article of household use almost as universal as the table and the stove, and almost as essential to the family welfare.

Accident and disease have lost half their terrors, because with the use of the telephone the help and advice of the physician is ready at our hands.

The farmer's home is no longer an isolated place of existence, but is in close communication, within hearing and speaking distance of the great social and business world.

We can lay just claim to the title of "benefactors of the human race." And as such are we not worthy of your most generous welcome, for which again I thank you?

Gentlemen of the Inter-State Independent Telephone Association:

It is an honor and pleasure to me to now call to order, the Inter-State Independent Telephone Association, and to address its members at this, its second meeting.

I wish to congratulate you that you meet with such happy surroundings and under such favorable circumstances and that you have received such a generous welcome to this great pushing city.

The energy and push of the Independent Telephone men is proverbial, and yet I may express a hope that that energy and push may receive a new impetus by our coming in contact with the business life of this great city, and especially as we come into personal contact with our royal entertainers, who stand in the very front of the great army of live hustling business men in this city.

I wish that at the very opening of this convention, every member could fuly understand and appreciate the importance of this meeting and fully realize what influences for good or evil to our business, and the busi-

Digitized by Google

ness of those we represent will emanate from this convention.

The Independent Telephone business in all its branches is a comparatively new factor in the great business life of this country and of the world. But it has advanced rapidly to a prominent place in the business life.

It needs no prophetic eye to realize the immense possibilities of the business in the near future. What I have already said of its growth in the past is but an index of the future.

Realizing these things myself, and asking of every one in attendance here, their careful consideration, I ask, that the matters coming before us be so taken up and handled as to bring the highest degree of credit to ourselves and the greatest good to our business. May our deliberations be worthy of the business that we represent.

The work of this convention has to do in the first instance and directly with telephone business from the operators' standpoint. In immediate results from a financial standpoint it may more directly affect the business of the manufacturers and supply men.

But if they have special opportunities to induce us to do business and get our money, we will at least have the opportunity of knowing what is on the market, and finding out what is most adapted to our wants, and where we can get it the cheapest.

The active work of the convention readily divided itself into three parts or heads:

First—Our business relations with the general public.

Second—Our business relations with each other, and

Third—Our business relations with, and standing in the financial world.

This is a case of where the last should be first, did not the last depend so absolutely on the first two. It is not for me to discuss those matters in detail.

An examination of the most excellent program, which has been prepared, both as to subject and speakers, will at once convince any one that the committee who prepared it understood the needs of the Independent Telephone work, and knew who was best able to advise us in relation thereto.

Speaking in a general way I may be permitted a few remarks in regard to the work of the convention along the lines suggested.

First—As to our relations to the general public. We must remember that we are of the people, that our business had its origin in the needs of the people and in their attempts to supply these needs. It is for this reason that the Independent Telephone movement has always had the moral as well as the financial support of the mass of the people. In this fact we find the secret of past success and the guarantee of future greatness.

It is therefore of the utmost importance that we preserve intact the cordial relations heretofore existing between the people and the Independent Telephone movement.

This means that in fixing the regulation rates of rental and toll service a proper regard is shown to the people's side of the question. But more essential yet than this is a course of action on our part having in view the proper treatment of our patrons, so as to retain their good will and interest in our success.

And while rates must be adequate let us take care not to "kill the hen that lays the golden egg."

In this connection let us suggest that one of the chief objects in a meeting of this character should be the education of the public. The medical profession meet and read learned papers and have long discussions on diseases and their treatment, not so much to educate themselves as to educate the public as to the necessity for and value of their services. We can do much in the way of education along similar lines.

In our relation to each other as operators there is vast room for education and improvement. If there is any special source of danger to Independent Telephone interests it is found in the want of harmony and co-operation among telephone men.

The inducements which the business has offered in the way of returns on investments, and the opportunities for acquiring rights and privileges having a great future value, such as franchises and rights of occupancy in highways, have aroused in some men a spirit of avarice and greed for territory, and has led to serious complications, which unless speedily settled will work untold injury. In other cases there seems to be a disposition to exact harsh terms for privileges granted, and a general tendency to want to do business on the "keep all you can get" plan.

There is room for all and we must respect each other's territorial rights. In granting privileges and concessions we must not lose sight of benefits received; and should make our grants on an equitable basis. If it is the good fortune of some company to control the business in some important center, just and equitable arrangements should be made with other companies asking admittance to such center. We should do all in our power to enhance the value of each other's property, instead of attempting to destroy that value by demanding unfair connecting contracts.

Especially must we abandon the "keep all you get plan" of doing business. There is no other business in the world involving anything like the same amount of capital, where such loose business methods and practices are permitted as in the telephone business.

The company is entitled to receive the pay for the service which it renders, either in use of lines or operators' services.

The time has certainly come when improved business methods are demanded among telephone operators. No company should be asked to furnish service without just compensation. Neither should one company receive the compensation for the service which some other company has rendered.

In my judgment there is an imperative demand for some accurate method of settling joint business between companies furnishing a joint service.

The large amount of capital invested by the different companies makes it absolutely necessary that some plan be devised by which the

Digitized by Google

capital of each company will receive just what it earns in service rendered.

One other thought along this line. I have found from experience that there is a disposition on the part of some Independent Telephone men to hinder rather than advance the complete development of the Independnt Telephone Movement.

For instance a local company is asked to enter into a contract with another company, whose object is to furnish the local companies long distance service. Ordinary business judgment would say that no company could afford to furnish the money necessary to construct and operate long distance lines without a long

HENRY C. RANEY,
Of Fairfield, Iowa. Ex-President Interstate Independent Telephone Association.

time service contract, and exclusive rights, under proper restrictions.

It would seem that the ordinary telephone man would see at once that a long distance connection would add to a good local business, the one thing needful to its highest continued success. That such connection would give much to and take little from the business of the local company. That instead of being competitors they would be mutually helpful; and yet there are telephone men who, either by reason of jealousy or want of business foresight, will turn down an opportunity to enter into such a contract on the most flimsy pretext.

I want to give you an instance. During the past summer I visited a local company composed of more than ordinarily intelligent men. I submitted to them a contract which had been approved by a large number of good local companies. They took the matter under consideration. Some time after I received a letter written by the telephone man of the company, in which he said that they could not accept the contract, that the compensation was inadequate.

His reasoning was as follows: He said the aggregate cost of all the exchanges connected by the proposed long distance line was greater than the cost of the long distance line would be, and they should share in proportion to their cost. It never seemed to have occurred to him, that the additional service required of the local company would not interfere in the least with the service the local company was already giving, and would not materially increase operating expenses. Nor did he seem to realize that what the local company was offered out of the business was almost clear gain. And he entirely overlooked the advantage of improved service to his subscribers.

I do not wish to be understood as even suggesting that the rights of all local companies should not be carefully guarded, nor that they should not receive a proper share in the proceeds of the business. But with these provisions it is certainly the duty and the proper thing for the local company to do all in its power to advance Independent interests.

I would urge very emphatically a more careful consideration of our duties and obligations to each other.

In the third place we would look carefully to our relations to the financial world. In the earlier history of the Independent Telephone Movement the financial question was not a serious one. As a rule the local company could find abundant local capital for all its wants. A comparatively small amount was required to start an exchange in the town or village.

But the almost universal experience of the small company has been that in order to protect the investment already made it must extend its service to adjoining towns and frequently over the country in the way of a toll service. In most instances this has been followed by the necessity of building farmer lines. So in many instances the financial question has become a serious one, even to the small companies; and when it comes to attempting to occupy the larger cities and build long distance lines the difficulty has increased. Investments along these lines have been in the past, and are yet very largely experimental in the financial world.

Independent Telephone stock and bonds have in the past had no established standing financially. Our special enemy, the Bell Company, has been very active in its efforts to injure us along this line. They have talked "natural monopoly," and "infringement suits" and other scary things until men with money hesitated.

They have followed this with misrepresentations and misstatement of actual conditions.

Soon after our last meeting I received a letter from our vice-president enclosing a communication, which is a sample of their efforts along that line.

Digitized by Google

The following is a quotation:

"Sunset Telephone Company."

Authoritative Statement by the President.

San Francisco, May 7th, 1902.

To the people of Los Angeles and adjoining Counties:

A year ago I assumed control of several Bell Telephone companies, covering the states of Ohio, Indiana, Illinois and Iowa, containing about 13 million people and within which there have been installed more opposition telephone companies than in any other portion of the United States. These companies are located in cities and towns of all sizes and are connected with a complete system of long-distance lines. Much of the construction being now five or six years old, is going to wreck and the owners are learning something of the depreciation of telephone installations and cost of maintenance. As a warning to the people of Los Angeles and adjoining counties, I state emphatically over my own signature that with all the millions of dollars that have been expended in these opposition telephone companies in the territory which I have mentioned, no investors have ever made money, and in nine cases out of ten they have suffered a total loss. The promoters and the construction companies have made money, and to them alone, and not to the public, has any benefit accrued, and I do not hesitate to say that throughout the eastern district, which I now represent, four-fifths of the merchants are radically opposed to two telephone companies in the same city.

Many of the first eastern opposition telephone companies were started in good faith on honest principles, but of late years the business has fallen into the hands of men who have handled their schemes with as little chance of profit to investors as the "wild-cat" mining ventures of the early territories. The East is about "worked out" for these people, and they are seeking new districts where their methods are unknown."

But on the other hand the actual financial history of the Independent telephone movement is a matter of wonder. As we all know, the men who have engaged in the business started without any experience whatever. They had everything to learn. They made many costly mistakes. The results financially are summed up by a writer in the Saturday Evening Post as follows:

"Independent companies are springing up over night, and almost without exception they are successful from the very start. It is of record that there were more failures of national banks last year than of Independent telephone companies for the last three years. Yet a dozen telephone companies are organized where one national bank is organized. And we have always been accustomed to look on a national bank as the soundest institution in the country."

So that notwithstanding the efforts of our enemies our business has already attained to a most enviable financial standing. Our future in this regard is in our own hands. A careful, conservative course, directed by our past experience will put us on a firm financial foundation.

Such statements as I have quoted above, made by our enemies, are known to be absolutely false. I do not know of the failure of a single telephone company in the state of Iowa. And I know none that is making less money than the "Iowa Bell," judging by appearances.

The financial standing of each individual company is a matter of its own, and we must and can afford to leave that to its own management. But as an organization we can make sure that the public in general, and especially the financial public, are fully informed as to the truth concerning our business. And when the truth is known there will be no doubt in regard to the general financial standing of Independent telephone companies.

The proposing and discussing of plans and details of procedure along the lines I have suggested belong to the work of this convention and will be presented, as the different topics on the programme are taken up. I have no doubt but that they will be ably presented.

In conclusion let us again congratulate the members of this association on the success of their business and the standing it has in the business world. And I urge the consideration and adoption of such plans and policies as will insure a future history as bright and as honorable as the past.

SECRETARY'S REPORT.

Secretary Coleman then presented his report.

To the Chairman, Officers and Members of the Association: In submitting this report as secretary of your association, it is impossible to make a very concise and systematic report, for the reason that when elected secretary of this association there were no records, except of the last meeting, by which to be guided. In fact the association was simply in the embryo, or the formative state, and it became imperative that your secretary undertake to bring system out of chaos. Our executive board being scattered throughout the states embraced in this association, could not be consulted at all times about what was best to be done, hence the only thing that could be done legitimately was to adopt such plans as were best calculated to bring about the desired results, submit them to the president who lives in Iowa for his approval, and then proceed to carry out such plans as determined upon. Other matters that made conditions the more perplexing were that such plans and methods as were calculated to interest three distinct classes of men had to be adopted, viz: 1. Owners and operators of exchanges and toll lines. 2. The manufacturers of the various kinds of equipment used in exchanges and toll lines. 3. Those men who are engaged exclusively in the supply business; that is, who handle the various materials employed in construction, but do not manufacture. In the beginning of your secretary's official career he had to confront the obstacle that only $128.00 represented the balance in the treasury of this association, so that the question as to what steps should be taken first, was a serious one, but after careful study and survey of the field from a practical point of view it was decided to write two circular letters,

Digitized by Google

one in which was set forth what was presumed to be the objects of this association, fourteen in number—and in the other a brief account of the last meeting of this association was given, in which effort was made to show the importance of every man engaged in the Independent telephone business to seek membership and co-operate in this work. In addition to this a blank form of application for membership for the year 1902 was prepared, and by advancing the money out of the secretary's private pocket to pay for the stamps, succeeded in mailing out 3,500 of these circular letters each, aggregating 7,000, and enclosed in each of these a blank application for membership, making a total of 3,500 applications mailed out.

This step resulted in bringing some funds into the secretary's hands, which were immediately deposited with the treasurer, Mr. Harper, of Wisconsin. So the association can understand that the chief difficulties the secretary had to contend with in the start were: 1. He could not possibly consult with the executive board, the members of which were so widely scattered. 2. He necessarily had to practice strict economy in the expenditure of the association's money, notwithstanding the importance of adopting some plan or plans to attract the attention of the Independent telephone people in the states included in this association, which could not be done except by the expenditure of some money. 3. No system previously adopted was or could be delivered to him as the secretary-elect, because when elected, the association was in a formative state.

4. No records except those kept of the last preliminary meeting were in his possession. 5. He simply had to exercise and rely upon his best judgment as to the necessary steps and things to be done, and depend upon the generosity of President Raney to approve whatever was suggested, which he very graciously did.

On the secretary's return home from the last meeting of this association he immediately opened up correspondence with manufacturers and the editors of the various telephone and electrical periodicals and magazines, and with the officers of various Independent telephone associations, in the attempt to carry on the work with which he was entrusted, and in this connection he begs to acknowledge the debt of gratitude due, and that this association owes through him, to H. B. McNeal, editor of Telephony; Wm. H. McDonough, editor of the American Telephone Journal, and J. J. Nate, of Chicago, because through these gentlemen he secured, as near as can be, a complete list of all of the Independent telephone exchanges in operation, all the toll line systems, the manufacturers of every sort, and all the supply houses in the nine states included in this association. Later the Western Electrician, the Telephone Magazine, Sound Waves and other publications interested themselves and rendered valuable assistance.

The first batch of 7,000 letters and 3,500 membership applications sent out aroused the people in a measure, and created considerable interest, and the interest has grown steadily throughout the year up to the present.

By reason of the fact that your secretary is secretary of the Louisville Home Telephone Co. and vice-president of the Independent Long Distance Telephone and Telegraph Co., both with headquarters at Louisville, Ky., his daylight hours belong in the main to these companies, so that most of the work and labor performed in the interest of this association have been done entirely when most of you were asleep, enjoying your good rest.

During the year your secretary has written hundreds of letters with his own hand in an effort to economize, because of the condition of the exchequer of this association. The work was pushed and prosecuted to the best of his ability until it was decided by correspondence between President Raney and himself that a meeting of the officers and executive board should be called to arrange all the details for this meeting, and under the authority of the president the secretary called a meeting of the officers and executive board at Chicago, September the 9th last, at which time the matters pertaining to this meeting were fully discussed and program, etc., determined upon. At this conference Dr. I. A. Lumpkin of Mattoon, Ill., Georgo N. Bandy, of Des Moines, Iowa, and Senator Hull, of Salem, Ill., were appointed a special committee on entertainment, to confer with the manufacturers and supply houses in Chicago, to determine definitely what should be done as to the entertainment of those attending this meeting, and select location for holding same.

Your secretary is pleased to report that the manufacturers and supply houses took hold of the proposition of the entertainment of this convention with a ready, willing and lavish hand, they having called several meetings and organized thoroughly, appointing special committees and selecting officers for those committees, so that the work has been very persistently and systematically carried on, as you will discover, before the close of this convention. Your secretary is very greatly indebted to the intelligent, practical and efficient assistance the manufacturers and supply houses have given him in the preparation for this convention through the chairman of their various committees, among whom we may mention Jas. Wolf, J. J. Nate, A. J. Rousseau, J. E. Keelyn and others.

After the conference of the officers and executive board on the night of September 9th the committee appointed on entertainment, together with the manufacturers and supply houses of this city, worked incessantly to get matters in shape and have kept in touch with the secretary so that as soon as it was possible a very attractive program and notice was prepared, and 4,000 of them mailed out all over the nine states of this association. Accompanying those programs return cards and instructions as to how to secure reduced railroad rates were enclosed. In addition to the above, at the suggestion of President Raney, your secretary prepared 1,000 circular letters to be made per-

Digitized by Google

sonal, and sent an equal number of them to each of the officers and executive board, with the request that they mail them out to the Independent telephone people of their respective states, thus making a personal appeal to secure their attendance at this meeting.

Another plan devised for the purpose of creating interest in this association and to economize at the same time, was the preparation and publication of an official handbook or souvenir work, to be distributed at this convention. Let me state just here that the secretary had no intention of invading the field now so thoroughly and efficiently worked by the Independent telephone magazines and journals. A contract with printers to have this work ready for distribution at this convention was made, but many of the men to whom letters were written for their photographs and many

COL. E. M. COLEMAN,
Secretary Interstate Independent Telephone Association.

of the firms from whom advertisements were secured failed to send in their photographs or copies for their ads in time to get the work ready for distribution at this meeting, and in addition to these facts quite a number of the most prominent Independent telephone operators suggested that the proposed work should include the proceedings of this convention and many of the manufacturers and supply houses, who were kind enough to give contracts for advertising space, also suggested that the work would be of much more importance and attract much more interest if it contained the proceedings of this convention, hence he was influenced by the reasons named above, to postpone publication and distribution of this work until the first or 15th of January, at which time it would be distributed all over the nine states included in this association and will certainly contain such matter, historical and practical, as will make it a very valuable adjunct to this association. This extra work the secretary took upon himself purely from the desire to make a success of this organization and felt that his duty as secretary urged him to do anything legitimate for the success of the Interstate association, especially when his plans contemplated that the work should pay for itself and cost the association as such no outlay of money.

It is hoped that this explanation of the delay in the distribution of the official handbook will be as it should be, satisfactory to everybody concerned.

One point your secretary was asked, officially, to determine recently, which he did not feel authorized to decide, was submitted to him as secretary of this association, namely, a certain company which had contracts for connection with the Bell Company and it is now using the transmitters and receivers of the Bell Company, applied for membership in this association although in a letter, which I will submit if the convention so desires, they admit they are called traitors by the Independent people, yet still claim to be Independent people.

There are three points to which your secretary would call especial attention and points which we think this association should discuss:

First: The establishment of some feasible plan for the exchange of business or a clearing house. The need of such an arrangement is certainly felt all over the territory of this association.

Second: The establishment of an information bureau, the object of which is to educate the public so that financiers and moneyed men may not be misguided by the fabulous, ridiculous and false publications scattered all over this country by the Bell Telephone Company.

Third: This association should determine whether or not any person, firm or corporation operating an exchange, no matter if they began as entirely Independent, but have entered into any kind of a contract with the Bell Telephone Company for connection in any way by which they use the transmitters and receivers of the Bell Company, is entitled to membership in this association.

Your secretary has gathered the following data which we think will be very gratifying to the members of this association:

First: There are in the nine states included in this association something over 3,000 Independent telephone exchanges in operation.

Second: While your secretary has not been able to get the exact number of lines of toll lines, yet it is not exaggeration to say that there are thousands of miles of toll lines or long distance lines in these nine states.

Third: There are over $100,000,000 invested in the Independent telephone business in the nine states, not including manufacturing plants.

Fourth: The manufacturing plants of Chicago alone produce and sell $20,000,000 worth of material a year in the construction of Independent telephone plants.

Digitized by Google

Up to this hour your secretary has collected for membership fees for 1902............————
And has expended upon approved vouchers of President Raney..........————

Showing a balance in the hands of the secretary ....————

Your secretary has prepared and mailed out documents numbering 22,500 pieces. During your secretary's official year he has received multiplied hundreds of letters from all over the country, and, indeed, applications for membership from other states not embraced in this association, all of which indicates that the public generally looks to this organization as the most potent factor in the Independent telephone field, the healthiest, most vigorous, successful and beneficial Independent telephone organization in America.

Having thoroughly studied and canvassed the field since his election as secretary and watched the progress of things and closely investigated the conditions, he is prepared to state that the results of this organization will far exceed in the good accomplished, anything anticipated by any of its originators, if the proper judgment is exercised in the future manipulation and management of the affairs of the association. Respectfully submitted,

E. M. COLEMAN, Secretary.

It was then decided that an auditing committee of three be appointed to examine the books of the secretary and treasurer and make report later to the convention.

It was also agreed upon that Thursday noon after adjournment the members of the convention and all visitors in attendance would meet on the steps of the Art Institute for the purpose of having a group photograph taken.

An invitation to inspect the underground conduit in this city was accepted, and Wednesday at 4:30 p. m. was the time agreed upon.

President Raney: Is there anything else to come before the convention?

A Member: In the secretary's report he suggests that some action be taken on membership, whether or not any person or corporation operating an exchange, no matter if they began as entirely Independent, but have entered into any contract with the Bell company for connection in any way by which they use the transmitters and receivers of the Bell company, are entitled to membership, and it may relieve the secretary right now of taking in some of those new members to settle whether they are eligible or not.

Mr. B. F. Wesson: I move that those who are using the Bell transmitter and receiver be not eligble to membership in this association.

The motion was seconded by Mr. Cockerell of Jefferson, Iowa.

President Raney: The question arises on the suggestion contained in the report of the Secretary, and the motion is that the users of the apparatus of the Bell Telephone Company be not eligible to membership in this association. Are there any remarks?

A Member: Membership should cease at any time they begin to use such apparatus.

A Member: Does that mean also in signing a contract for long distance connections? For instance, they have no exchange in a town you are doing business with and have long distance connection, and you should enter into a contract with them. Take it in Kentucky where they can force you to give your services with your exchange, would you then be excluded as a member.

President Raney: That is one of the questions to be determined.

Mr. Wasson: I make the motion to get up discussion that we are allowed to talk all we please now. I will say in making that motion I said those who used the transmitter and receiver of the Bell company, and of course there are some who are obliged to connect with these people at present because they have no outlet whatever except little local exchanges. I do not want to shut up the little exchange, but I do want to shut out the Bell transmitters and receivers. I think it would be a good plan to run another line. It would be time enough then to shut them off. That is the only thing they have to fall back on, and they will find out they can do that. I make the motion that they are not eligible to be members of this association if they are using their transmitter and receiver. They should come to us when they ask to get on our switchboard.

Mr. Ware: I want to suggest that when a man gets through talking that those who do not know the conditions should have an opportunity of asking questions, otherwise we are not going to get through in four weeks. The conditions he suggests are new to me.

Digitized by Google

Mr. Cockerell: Let him ask his question.

Mr. Ware: Do Bell exchanges get services through your exchange on independent lines.

Mr. Wasson: No, sir.

Mr. Ware: Do independent exchanges get services through your exchange toll line?

Mr. Wasson: No, sir.

Mr. Cockerell: All the suggestion I have to make, and my point is very plain in admitting to the association anybody who does business in any way with the Bell Telephone Company. I do not care in what way it is done as long as it is done. You can't depend on the Bell Telephone Company to give you service, and it was my idea they could not belong to this association, anybody in connection with the Bell company, no matter what the laws are. Mr. Raney understands they are forcing us to connect.

President Raney: We haven't any such law, and even if we connect we would not give much business. If we entered into a contract with the Bell people I would not think we would be eligible to membership, but as long as they are forced to it I don't know whether they ought to make a contract.

Mr. Ware: If it is illicit we are bound to continue. (Applause.)

A Member: I desire to say that we have a peculiar situation in Ashland. We have the only exchange in the town, and our long distance service is inadequate to meet our demands. We have iron interests and steel plants and furnaces, a small Pittsburgh, on the Ohio river, and those plants demand Chicago, Milwaukee, Pittsburgh and New York. We can't give it to them. They are going to get it. Now, they are going to get it if they have to give the Bell people franchises to do that business. We don't want them to get franchises there. Won't it be better for us to permit them to connect their long distance line into our exchange than to get franchises there? I would like to hear some one on this question.

Senator Hull: Will they do it? Have you a contract with them?

Member from Ashland: We have no contract.

Senator Hull: Have you got the connection?

Member from Ashland: No, sir; we are just preparing to do that.

President Raney: I would like to ask the gentleman if the Bell people will enter into a contract with him to allow his company to connect with the Bell company, and at the same time allow him to connect with any other independent company?

Member from Ashland: As near as I can get the proposition they are willing to take our business as it stands. We shall do business with other independent companies.

Mr. Ware: They would not allow you to connect with any other independent company.

Mr. Morrison, Bryan, Ohio: I have been up against that proposition, and it strikes me when you connect with a Bell toll line you are destroying the demand for an independent line. What we want to do is to simply build independent lines. I have been in several towns in the capacity of construction man where they demanded service with Chicago and New York, and where we could have given that service over the Bell lines. I don't deem it an advisable thing to do.

Mr. Cockerell: It would be well to refer the point to a committee. I don't believe we could act, and the committee could decide it, and it would suit me. I move that the question be referred to a committee.

A Member: Publicity is all right on trusts.

Mr. Bell: I believe there should be a larger committee than three. The conditions are so different in the different states. I believe the committee should be five or seven. That is a complicated question. I have been fighting them to a finish everywhere, but I know members here who will be affected in Kentucky, and I believe it is a wide question.

President Raney: Mr. Layne of Missouri has the floor.

Mr. Layne: It occurs to me that this question has widened from the stipulations of the first motion, those using the Bell transmitter and receiver. If I understand this motion it is restricted to

that point. We are widening the discussion to other connections. We should confine ourselves to the direct consideration of the motion. I think we will comprehend this better and can act more understandingly, and while there has been a suggestion to take this question up and more clearly define the membership of this association, I suggest that if a committee be appointed there be a member from each state.

A Member: I was going to change my motion and make it that the President make it one from each state, and I want to give my reasons for it.

President Raney: I suppose we can take it as a motion.

Mr. Bellamy: I move that this motion of Mr. Cockerell that the chair appoint one member from each state to take up this question, thoroughly consider it, and report to this convention at some future time, some time to-morrow, and that that committee as far as possible be composed of lawyers. You are aware that had it not been for the work done by our legislative committee in Iowa we would have had that same physical connection law they have in Kentucky, and it would shut every man from Iowa out. If you pass this motion as it is being discussed here it will shut out members. I know where I am interested in Kansas it is the case that they are coming to us and soliciting connection, and they are willing to take our business. They are willing to allow us to connect with anybody else. When you are going to set the standard of membership for this convention you want to be careful how you do it. I don't know whether we want to take the Bell toll lines in or not; I am under the impression we may swallow the Bell instead of their swallowing us, if we manage right. I am not sure about this. (Applause.) If our member from Kentucky is loyal we don't want to drive him out of this convention, and yet, on the other hand, I don't want to do anything to interfere with the building of these toll lines. I know I would rather connect with independent exchanges than with Bell exchanges. It is worth dollars to me where the other isn't worth pennies. This is an important question and under no circumstances do we want to do anything here to interfere with independent toll lines we are interested in, and for that reason I make this amendment that the chairman appoint a committee of nine, and as far as possible that it be composed of lawyers, because they are acquainted with the statutes and know what may be on the statute books so we may not interfere with any man's rights.

Mr. Ware: We suggest that there is something far more important than the law on this committee, and, while I would be glad to see one or two lawyers on that committee, that is as many lawyers as ought to go on any committee. (Applause and laughter.)

I would like to see appointed on that committee the best telephone men you have in the seven or nine states, including two lawyers, if you have telephone men among the lawyers, and consider that question. We have heard from the secretary and others here that this organization is setting the pace. That is probably true, but in what direction? There is another question coming up from what I hear since coming to the room this morning, which will be of importance, and altogether we want to do that which is for the best interests of all. This question is vital. What would have been the effect of this action if taken three or five years ago upon the independent movement? I hope in appointing that committee that the clearest headed and most experienced business men in the telephone field in those states be given in charge and asked to report to-morrow, because it is a matter that will be discussed, and we ought to have ample opportunity to consider the matter, and I hope they will not all be lawyers.

Mr. Seaborn: I would suggest that we make two motions, one to include the people who are using the Bell transmitter and receiver, and act on that motion, and then make a motion as far as long distance lines are concerned.

Mr. Wasson: I suggest we stick to that motion. Transmitter and receiver is all that has been said.

Mr. Ware: It is not in order to offer an amendment to the motion already passed about the use of Bell transmitters and receivers.

Digitized by Google

Secretary Coleman: That motion has not passed; that is the motion before the house.

Mr. Ware: I want to ask the maker of the motion before the house to make the motion broad enough not only to include Bell apparatus, but connecting with toll lines. I don't believe in any restriction. If there is a question which ought to be settled, let us take it up and consider what should be done by this association, and it is not a question of using, leasing or renting by verbal arrangement or otherwise Bell transmitters or receivers. It is a vital question—are we going to do business with the Bell people, and it ought to be broad enough so that no technical man on the committee should say we should not take it up. That all referred to by the member who made that motion was the transmitter and receiver should be broadened.

President Raney: If you would withdraw your motion and get this in shape—

Mr. Bellamy: I will do that.

Mr. Ware: Which motion is before the house?

President Raney: That the users of Bell instruments, transmitters and receivers, be prohibited from membership; that is the substance of it.

Mr. Ware: I would like to make a substitute to whatever motion or motions may be before the house, and suggest that the whole matter of using Bell transmitters and receivers and connecting with Bell lines, be referred to a special committee of nine, one from each state of the association, with the request to consider the matter and report to-morrow.

President Raney: You move that as an amendment?

Mr. Ware: I move that as a substitute.

Senator Hull: I second the motion.

President Raney: The original motion has been amended by moving a substitute that the whole matter of using Bell apparatus and connecting with Bell lines be referred to a committee of nine, one from each state, to consider and report their action here to-morrow .

Mr. Wasson: As the motion is changed I wish to say that those of you who have had experience with the Bell people, that you do not use their transmitters and receivers without being sub-licensees of that company, and cannot connect without a contract, without being under their rules and regulations. They will not give you transmitters and receivers without your being sub-licensees.

Mr. Conkling, Aurora: I wish to be heard for just a moment. The question of connecting with the Bell Telephone Company, or any of its licensees, whether the parent organization or any of its licensees, I consider vastly of more importance to the independent telephone companies in these states than the question of using transmitters and receivers. In support of this position I wish to say that the future success and profit in the operation of independent telephone exchanges to-day depends more largely on their toll lines than any one thing. In the first building of exchanges crude material and construction prevailed, and unsatisfactory equipments were used. Through the schooling of a few years these same parties who were novices have become construction men. To start with we put up equipment known to be inferior. We now have better equipment than the Bell and we can beat them on equipment and construction with advantage to ourselves and the future welfare of the company. I contend that the future of the telephone business is a field that involves toll lines as efficient as the Bell has. We can afford to build toll lines between terminals by ourselves with all security. We have been building toll lines between our own terminals up to the present time. No capital has been fearless enough to take the proposition to extend toll lines through the West. The United States Company has done so in Ohio, but nobody has been willing to venture outside of their own exchanges. I submit in order that we secure to ourselves here in the West a system of toll lines which shall be wedded inseparably to the exchange interest of our investment we must guard safely the matter of connecting with toll lines. I have fought for myself the battle of competition in the face of extended connections by my competitor, the Chicago Telephone Company, over the entire United States. I have been successful to this degree that we have exceeded the op-

Digitized by Google

erations of the Chicago Telephone Company in the same territory and are able to maintain ourselves until such time as independent telephone investment will be extended out through the territory and form an artery through which will flow clear independent telephone blood, and I hope to see the day when we can say "no" to the American Bell Telephone Company or its licensees with the full satisfaction of having a better thing of our own, and in order to do that we must say "NO," and there will never be a better time to say "No" than right now. The Bell company are not coming to us any more with patent infringement scarces. They are not coming to us any more saying we cannot profitably maintain independent exchanges, for we have demonstrated that we can do so. We have fought out the patent litigation until it is no longer frightening us. They are now approaching us in a more sly and subtle manner and asking us to become sub-licensees of theirs and use their telephones, and in order to stifle toll lines, which is the one great card of the independent telephone exchange, they offer to give us toll line connections, and put the infant toll line investor in competition with a great monopoly. It is a serious question for us to consider and we have heard there is over $100,000,000 invested in independent exchanges and toll lines. I would like to know what percentage of that $100,000,000 of capital has tarnished its name by affiliating with the Bell company in any way, shape or form. It is only a very small per cent of it, and shall we sacrifice our names and future in catering to small exchanges by closing this door positively and firmly?

Mr. Morrison: His remarks reflect my remarks, but I believe this discussion should come after the report of the committee. Should not this general discussion come on the report of the committee?

President Raney: I think we will want to talk it all over again.

A Member: This question should be decided by the convention.

President Raney: It will come on the report of the committee.

Are there any further remarks on the motion before the house?

A Member: What time is this committee to report? The session begins in the afternoon and we want a report to-morrow.

A Member: I want to ask the gentleman from Kentucky will the Bell company allow his subscribers to talk over their toll line through an independent transmitter and receiver?

Yes, sir, they are anxious to do that.

President Raney: Yes, in more places than one. All those in favor of the motion say aye.

The motion was unaimously carried.

It was then moved and seconded that adjournment be taken until to-morrow at 1 p. m.

The motion was unanimously carried.

Mr. Rex, Manchester, Ind.: I wish to make the motion that no company or corporation or manufacturer who sells apparatus to an opposition telephone company will be eligible to membership in this association.

President Raney: I suppose that would be covered by the report of this committee.

Senator Hull: Apparatus for an opposition independent company?

Mr. Rex: Yes.

President Raney: Is there a second to the motion?

It is moved and seconded that no manufacturing concern that sells apparatus to an opposition independent company in the same territory be eligible to membership in this association.

Mr. Bellamy: Would it not be well to refer that to the same committee, and that it be included in the report of the committee? If he will change his motion I will second it.

The motion was duly seconded and carried.

President Raney: And I ask a full attendance at 1 o'clock to-morrow.

Secretary Coleman: A matter has been suggested by some present that I expect would be best to refer to the convention. I understand that this is an independent telephone convention, but that there are a number of Bell Telephone men here.

A Member: That is right.

Digitized by Google

Secretary Coleman: The question is what right have they here and what right have we to exclude them and what plans will be adopted as to the future sessions of this convention, whether or not you admit them or exclude them, and what means. I generally go where I am invited and not otherwise.

Senator Hull: That ought to be sufficient.

Mr. Cockerell: I suppose every one knows that I am an independent telephone man. I would say let the Bell people stay in if they want to, and they know I live in Iowa. Just the same we aren't afraid of them, as our friend from Kentucky is, and if he had more back bone he would not want any connection with the Bell people whatever.

Mr. Layne of Missouri: This occurrence forced this upon my mind that they have learned to respect the independents. I say let them be here; we don't fear them any more, and what I repeat is what I have heard on this floor before, and that is that they are ready to come to us on any terms, on our terms, and we are no more under the necessity of acceding to the dictation of terms from that company. We freely admit them, as far as I am concerned, without fear of their doing us injury in any way. They are ready to come to us and offer connections on any terms.

Mr. Wasson: I say let the people come; they want some pointers, and this is a good place to come. We don't want them as members, but we want them to build up a little.

Mr. Savage: I think this is a business proposition, and we are not here for the purpose of laughing or extending courtesies. I understand this is an independent telephone convention for business and I am of the opinion that we can carry courtesies too far, and I agree with the sentiments of the secretary in every particular. So far as the Bell company coming to us, I think we have had about enough of that slush. The lion and the lamb sometimes lie down together, but usually the lamb is inside of the lion [laughter]; and we are having a little experience and have had a little experience of their courtesy of 25 and 50 cents a month for telephones, and so far as the public meetings of the convention are concerned certainly we should have but a business session. I think it would be best to have a committee on credentials, and admit no one but independent men to the convention. Surely every person is in here for aiding the independent cause in any way. I am very much in favor of the idea suggested by the secretary and I think some method should be adopted to limit the business meetings to the members of the association and those directly concerned in the independent work.

Dr. Bennett of Waterloo, Iowa: I have been waiting to see this convention take some definite step on the subject now before it. I have no desire to discriminate against the Bell company in any business or social way except which accords only with good or kind acts, but for us to affiliate with them here in a business way is doing that which the Grand Army of the Republic would not have done prior to 1865 with the gray veterans of the South. With all respect to the gray veterans of the South to-day, we did not affiliate with them prior to a certain date. With us this is not '65, but is about '63, and we do not know yet what their friendliness means; it does not mean in this hall any good, it means acquaintanceship with us. I do not ask you to trust me if I affiliate with them or talk with them or associate myself in any way with them. I would be open to suspicion. I have respect for every business competitor, and no one respects an enemy more than I, but I have no respect for any enemy that places the welfare of my fellow worker at any disadvantage, and it is our duty now to respect the Bell Telephone Company by asking them to give us a fair fight, but no man fights fair when he comes into your camp and asks to be friendly. I have no use for them except as true enemies and do not wish to be identified with this association unless you eliminate therefrom every Bell Telephone interest. I can have my heart's blood dropped away by the thrust of an independent telephone man and I will stand forever on that basis and warrant your respect, but not for one moment will I suffer the loss of a drop of blood on any other field. That man who allows himself to be friendly to the Bell Telephone interests, as a telephone man, cannot be

Digitized by Google

mixed up with me in any way while I am a telephone man. (Applause.)

President Raney: As I understand it there is no motion made by any one in respect to this matter.

Mr. Tetu of Kentucky: I move that admission be denied any applicants for entrance to this hall excepting those showing credentials or properly vouched for by members of this association.

President Raney: The question is that no one be admitted to the meetings of this convention except he has proper credentials of his own, or is vouched for by a person having proper credentials as an independent telephone man.

The motion was carried.

Mr. Tetu: I move that a committee of three be appointed to pass on credentials.

Mr. Cole: It is moved and seconded that a committee of three be appointed to pass on credentials.

Motion carried.

President Raney: I wish to appoint the committee from each state.

Mr. Ware: I want to find out whether the matter of discussion has gone as far as it has and motions just passed, whether those who have made connections with the Bell company are to be admitted in this hall.

President Raney: That is a matter that has been referred to a committee to report to-morrow at 1 o'clock.

Mr. Ware: I do not believe there is a man in this room who wants to see any one connected with the independent movement kept out of the room, and the fact that we have in the excitement of the moment expressed ourselves strongly simply shows our individual opinion. Every man is entitled to his opinion, and what we want, in my judgment, is to have the very men here who are liable to make those arrangements with the Bell companies that have been suggested, and I hope whoever the committee may be that they won't have too keen sight. I want every man to have the right here; no self-respecting Bell man would come here to-morrow—I admit there are many who are not self-respecting, and there are gentlemen in the Bell company, and they will not be here to-morrow after the expressions they have heard. Nothing will be heard here but what the newspapers will catch; you might as well give them a chance to be heard, because the vital interests of the whole independent movement are represented in the matter referred to that committee.

Senator Hull: I suggest that Mr. Ware be chairman of that committee.

Dr. Bennett: I think Mr. Ware is mistaken; it is not from hearing everything here, but it is from the possibility that evil associations corrupt good.

Mr. Ware: I will ask the doctor to remember that remark when we are not in session.

Mr. Dobie: It may appear that we have harbored somebody really dangerous.

President Raney: The convention has ordered a committee of three and I shall appoint them. I do not think they will be authorized to exclude any man connected with the independent telephone business, although they may hereafter, but the strictly Bell men ought to keep out if that is the sentiment of the convention.

I want to name this committee to report to-morrow on the question of who is eligible to membership:

Ohio, H. H. Robinson.
Iowa, J. S. Bellamy.
Wisconsin, Mr. Bell.
Minnesota, William J. Buck.
Michigan, J. B. Ware.
Indiana, L. A. Frazee.
Illinois, M. Savage.
Missouri, J. W. Layne.
Kentucky, A. L. Tetu.

President Raney: On this committee of three I wish to appoint Mr. Cole of Kentucky, Mr. Rex of Indiana and Mr. Conklin of Illinois.

A Member: Would not we have a chance to go before this committee with any argument?

President Raney: That will be a matter for argument.

Mr. Ware: Can this committee meet here at this table just for a minute?

President Raney: The members of this committee as named will please meet right here and hold a session for a moment.

Digitized by Google

The nominating committee will meet immediately in the room just outside the hall to the right.

The committee to whom is referred this matter of membership will meet at 8 o'clock to-night in the secretary's office, room 3, and all persons who want to be heard will please be there and present their case.

Are there any other announcements?

Secretary Coleman: I want to announce that the secretary has some assistants in rooms 2 and 3, first floor, and that the office will be kept open all the time. Do not delay registering; you can register all the time. You must register and get your badge to get into the banquet.

President Raney: The motion to adjourn is now in order.

On motion duly made, seconded and carried the convention adjourned until 1 o'clock p. m., Dec. 10, 1902.

SECOND SESSION, WEDNESDAY. 2 P. M.

A report of the committee on the question of membership was requested.

Mr. Ware: Mr. Chairman and gentlemen, the committee has drafted two reports, one upon the question of manufacturers furnishing apparatus to competing independent telephone companies in the same locality, the other upon the question of eligibility of members in this association. The latter report is somewhat extended. The former is very short and I will read the report regarding the selling of apparatus to competing independent companies in the same locality first. I regret we have not a larger attendance here, because these matters are of special interest. The committee selected Mr. Layne as chairman and Mr. Ware as secretary, and as secretary of the committee I am making the report, which has been signed by all the members of the committee.

"To the Interstate Telephone Association:

"Gentlemen:—Your special committee to which was referred the subject of com peting independent telephone companies in the same locality have had the matter under consideration and unanimously recommend the adoption of the following resolution:

"'Resolved, that this association pledges its members to refuse to patronize manufacturers who sell apparatus to any company entering into competition with an independent telephone company already established and giving reasonably efficient service.'"

After considerable discussion the resolution was adopted.

Mr. Ware: The second part of the report is as follows:

"To the Interstate Telephone Association:

"Gentlemen:—Your special committee to which was referred the subject of competing with the Bell Telephone Company lines or the use of Bell apparatus submits the following report:

"The success of the independent movement thus far has depended upon and been made possible by the union of action and hearty and loyal co-operation on the part of the opposition companies, in the interchanging of telephone business, and with the use of apparatus made by independent manufacturers. The patronizing of these manufacturing institutions, competing with each other, has resulted in great improvement in telephone apparatus, in very largely reducing the cost of the same and in securing to the public such improvement in quality of service and the lessening of rates as to lead to an increase in the number of telephones in use that can scarcely be comprehended. To-day telephones, switchboards and other apparatus can be purchased in the open market without royalties and unequaled and often unequaled in quality and in service results.

It is conceded by all acquainted with the telephone development during the past five years, both Independent and Bell, that except for the patronage given independent manufacturers these improvements in apparatus and in service to telephone users and the increase in the number of instruments used would have been impossible.

"Therefore, we deem it for the best interests of the public and independent companies that the competing manufacturing institutions continue to be patronized, and that any operating company or individual using Bell apparatus does that which tends to demoralize and destroy the independent movement, and that such

Digitized by Google

parties should not be admitted to membership in the National, Interstate or State associations.

"We believe further that future success also depends on those who have invested or may hereafter invest in independent exchanges or lines being insured proper connection with all other independent exchanges and toll lines in the territory covered.

"We, therefore, recommend that on the operating side only such individuals and companies who under proper contract relation and in good faith connect their toll lines and exchanges with other legitimate independent companies, where opportunity offers, shall be eligible to membership in this association.

"Further, we deplore individuals or companies connecting lines or exchanges with Bell licensee companies as has been done in a few instances in different states, and we believe that no such relation should be permitted except possibly in isolated cases, which arrangement should be passed upon and authorized by the state association, if there is one, and by the executive committee of the Interstate association or the advisory board of the National association, the authority in each case to be granted only by a two-thirds vote of such state association committee and board.

"In conclusion we urge this association at this, its second annual meeting, to adopt this report as indicating our willingness and determination to do that which it is believed will secure the best results, time considered, to the public and to the investor.

"'In union there is strength' is particularly true of our telephone business."

The report is signed by all members of the committee. I move the adoption of the report.

Motion seconded.

The Chairman: Gentlemen, you have heard the report as read and a motion has been made that it be adopted. Are there any remarks?

Mr. Schlosser (Gibson City, Ill.): Now the objection is to that that the Bell people cannot connect with the independent companies. Now, we have absolutely no contract with the Bell companies, none whatever; we pay our $2 a year for transmitting receiver and there is no independent company connected with us that has a line over which we can do business. Now we are in the position where there are about twelve independent companies that get long distance service exclusively through us. If this resolution passes, as I understand it, these twelve companies are instructed to withdraw connection from us, unless we decide to discontinue from the Bell companies. The facts of the case are, to get any connection outside of our county our company would be compelled to build lines for, I should judge, fifty or sixty miles in either direction, and we are hardly able to do that, we cannot cover the whole central part of Illinois.

Mr. Ware: Wouldn't it be well to leave that matter to the committees of the Interstate and National associations or your state association?

Mr. Schlosser: Not unless they were in a position where they could thoroughly understand our position.

Mr. Ware: It would be well to explain it to them.

Mr. Schlosser. If the men on that committee were competing with the Bell Telephone Company, something that we do not do, I would not be willing to submit it to them.

Mr. Ware: He says he would not be willing to leave this question to the committees of the National or Interstate association or state association if the members composing these committees were exclusively in competition with the Bell Telephone companies. You have his statement and you have got the report and it is for you to decide whether you will stand by the report or by this man who is not willing to accept the decision of a committee of the National association or Interstate association or his own state association, made up of men who are not connected with the Bell Telephone Company. There is the proposition and there is no difference between us upon it.

Whereupon a motion was made that the report be adopted.

Mr. Savage: I think I come in about as close competition with the gentleman who just spoke as any one here. So far as we are concerned on the connection with his company, he stands just the

Digitized by Google

same as the Bell company in our own city. When he wants to do any business with Champaign he does it over the Bell Telephone Company wires, a proposition—I think the information comes to me perfectly reliable—the proposition comes to me that the gentleman himself now proposes to build a line from Gibson City directly to a point where we have an independent line.

Mr. Schlosser: I would like to answer the gentleman by saying that we have made an arrangement with the managers of one of the exchanges by which we might get efficient connection. Furthermore, when we connect with the Champaign exchange, we try to get toll service to Champaign, and there are nine or ten farmers on the same line, and somebody, Fisher or some other station on the line, who were stockholders on that line, the operator would say that they had a prior right to the use of the line and we could wait until they got through or cancel the call. The result was we cancelled the call because we had to. We never could get any service with Champaign and Champaign couldn't give us service. We get Champaign's service over the Bell line about nine miles of Bell line and twenty miles over our own line.

Mr. Savage: I did not waive my right to have the gentleman make a speech in connection with my remark. This is not as I understand it, Mr. Chairman, a place to hear personal grievances, but the gentleman who has spoken is body and soul Bell and nothing else, and we know now, so far as his connection with the line is concerned. That is a matter, of course, that does not interest us, because we have a toll line. The toll line through Fisher that he speaks of has not a farmer on it, and this man comes here before you —I might tell you a little more about the history of our personal relations, but it would not interest you and it would not be right to occupy the time of this association in doing that, and when a man comes before the association on this resolution and says in effect that he will not abide by the decision of a committee or an association of independent men—in other words, I suppose he would be perfectly willing to refer this to a committee of five; three of whom should be Bell men and two of them independent.

Mr. Seaverns (Ky.): I desire to state that as far as my company is concerned, which I think has as aggravated a case as there is probably anywhere, that I am willing, more than willing, to stand by the decision of the state association or any other independent association.

I also desire to say that through a statement of the paper this morning no doubt the impression has gone forth to the Bell Telephone Company that they have won us back to their hearthstone, but I want to say that it is a mistake. I am an independent, and our company is independent from the sole of our feet to the top of our head, and I am going to stay so. (Applause.)

But, on the other hand, if, with the $90,000 that we have invested in the telephone business, we can strengthen our position in the independent field by connecting with the American Bell Telephone Company on their long distance line, and by so doing keep them from entering the field that we occupy, and make our proposition worth more money and at the same time not injure the independent movement, why, I think it is to our advantage to do so, and I believe that any good business man in this association will stand by me on that question, and I am perfectly willing to leave it in the hands of this committee. (Applause.)

Mr. Tetu: I think Mr. Seavern's point is well taken. As a member of the committee I agree in substance with what has been reported, but I maintain that in order to strengthen our financial positions and operation position we ought to cooperate with the Bell company to the extent of interchanging communication, but only up to the time that we can reach those points ourselves. Now do not let us cut our noses off to spite our faces. We are in a small way dependent upon the interchange of toll service, and being yet in our infancy, we, of course, do not cover territory that the Bell company does. Now we are not going to them, they are coming to us, they are conceding the fact that they want us to help them, and I do not think that we ought to imperil our financial position or the financial position of our companies by saying don't do it,

Digitized by Google

when we cannot do the work with our own facilities. I sustain Mr. Seavern's position in this matter and I believe as the resolution says in isolated cases that the members of this association ought to have the right to make those connections.

The Chairman: Gentlemen, are there any further remarks? If not, I will put the question. All in favor of the adoption of the resolution as read will signify the same by saying aye, contrary naye.

Motion carried.

The Chairman: We will now take up the regular program for the afternoon, the first number of which is a paper by Mr. George N. Bandy, Perry, Iowa. The subject is

RATES--MEASURED SERVICE.

As the discussion which follows the reading of a paper is generally more valuable than the article itself, I will be as brief as possible and endeavor not to tire you by submitting a long and exhaustive argument as to why telephone service should be charged for on a meter basis rather than a flat rate.

Of all public utilities, gas appears to have been the only one charged for from the beginning according to quantity consumed. Until recently it was a common practice, and is yet the custom in many places, for water companies to charge according to the number of rooms in a house or number of front feet in the lot; now the modern practice is to charge a certain rate per thousand gallons. It was formerly the rule for electric light companies to charge for a current according to the number of lamps connected, but now an up-to-date company charges according to Watts or the actual quantity used.

The pioneers in the telephone field, who by the way, were the various Bell licensees, not having at the time the telephone was first brought into commercial use apparatus by which the number of calls could be accurately recorded, adopted the expedient of charging for the service an arbitrary rate per month, having a higher rate for business than for residence telephones. This practice still largely obtains among the Independent companies; but the Bell licensees are breaking away from that custom as rapidly as possible; especially is this true in the larger cities.

There are several reasons for making the change; it yields a larger income per telephone, increases their list of subscribers and last, but not least, rids their patrons of that intolerable nuisance known as a dead head who uses your service in many cases more than a regular subscriber without paying therefor, and 99 times out of 100 not only fails to show his appreciation of the convenience by thanking the company or subscriber, but is loudest in his denunciation of what he is pleased to call "the rotten service" the company is furnishing.

Many of the Independent companies have profited by the mistakes of opposition companies, but I am sorry that there is a large number who have not made the most of their opportunities. We are now able to purchase telephone apparatus that so far as their signaling and talking qualities are concerned, seems well nigh perfect, and is certainly equal if not superior to anything used by the Bell licensees. This being true, why should we hesitate to adopt "measured service." It is certainly fair to both the patron and the company, and I see no good reason why the change should not be made.

For a number of years the word "Independent" has had a wonderful influence upon the public, and during that time, they have given us their confidence, good will and money, and are now not only requesting, but in many cases are demanding, that they be furnished not only with first class but modern service, embodying the latest ideas. It is therefore plainly a question of the survival of the fittest, and if we expect to remain in this business, it is only too evident that we must be continually on the alert for and introduce the latest and most approved type of apparatus and inaugurate such changes in the handling of and charges for, telephone service as seems appropriate and satisfactory to the public.

I believe that the majority of our subscribers would welcome a change from the present flat rate system to the "pay for what you get" principle. It may be, however, that the apparatus for recording the number of calls is not sufficiently perfected to warrant our making this change, but as necessity is the mother of invention I confidently believe that if it is shown that the apparatus now available for this purpose is not efficient, that someone will soon place on the market an instrument that will meet our requirements.

In charging for telephone service on the meter basis, it may be necessary to have the subscriber guarantee a certain number of calls per month; for instance, a residence telephone might guarantee twenty-five calls at four cents each per month; all in excess of that number to be charged for at three cents per call. Business telephones $2 per month for forty calls; all in excess of that number three cents per call. The guarantee as to minimum number of calls per month to be varied to suit local conditions. No calls to be recorded unless the number or party called is obtained. All incoming calls free.

These are merely brief suggestions for your reflection. There are various ways offered by others for accomplishing a similar purpose. An idea laid down by a prominent telephone man as long ago as 1895, has been adopted for practice by a number of telephone companies. It has later become the rule in some foreign countries. It is to first charge a flat rate, covering a reasonable amount for the subscriber's station maintenance; then a charge additional for the service, or a switching rate of so much per call, varying from two to six cents for exchanges.

I understand that here in Chicago the new

Digitized by Google

system is based upon a similar idea, but the method of applying the rates differs. The Chicago company may fairly be called the largest prospective exchange telephone company in the world. Recently, after the most elaborate and searching preparations, it concluded upon what it calls its new policy, of meeting the Independent and the demands of its patrons for lower rates. This so-called new policy, I am told, consists in a determination to establish message service or its equivalent, almost, if not entirely.

The plan is to require a guarantee per month per telephone, and then an additional five or ten cents per call on the main exchanges. The company operates a large number of exchanges outside of the main part of the city. These exchanges are sometimes called suburban exchanges. For instance, if you are a telephone subscriber in Englewood in the southern part of this city, or Rogers' Park in the northern part, you must pay a flat rate (said to cover a so-called local service) of about $30 to $60 per annum, then on each call for the main exchanges you pay ten cents more.

I refer to the Chicago telephone service methods because that company is known to many as being progressive, and we are better acquainted with conditions here than in other places where this message service is being adopted. I do not go into full details because you may readily learn more by inquiry, but I am not averse to adopting any new improvements, even if the Bell first show the public desire them.

This subject must have an important bearing on our future, we ought now to begin to learn all about it. It is possible that some here have had actual experience with it, and, no doubt, many others can give us good ideas or information regarding it. I have thought it best to simply call attention to some of its points rather than give specific data at this time.

I hope the discussion may indicate your desires and prepare the way for future action, remembering that "As the twig is bent, the tree is inclined."

Mr. Conklin: In the matter of measured service there are a great many items entering into it which modify the application of it to subscribers in various exchanges and in various parts of the country and in various parts of the same exchange, and if these modifications only applied to subscribers in various exchanges and not to subscribers in the same exchange, it would be a matter very easily adjusted, and while the paper was being read I had some objections to measured service that arise in my mind, and I just want to mention a few of them. In the first place it is the object of the Bell Telephone Company to meet competition, and they have never successfully met competition where it was against a well operated independent company, whether for the reason that independent companies as a rule are given, are giving, flat rates and unlimited service or not, you yourselves have an opinion worth as much as mine. That is one point. Another is this, that in paying for measured service it is true that if only the matter of the switchboard expense was taken into consideration, the matter of connecting one subscriber with another was taken into consideration, and a given amount for each call, three four, five or six cents per call, would apply equally to all subscribers, whether residents or business subscribers, why, that is a question; but my experience in the operation of exchanges has convinced me emphatically upon this point that the expense of operating a telephone in a subscriber's place of business or in his residence very largely depends upon the distance this subscriber's station is from the switch board, and I might have a residence subscriber four blocks from the switch board and another one half a mile, and it seems that if we received adequate remuneration for each one coming into the switch board, we would be compelled to reckon the expense of the maintenance of the lines of various lengths of a block to a half mile or two miles long. In my own experience I am inclined to the opinion that in the first place a flat rate unlimited service is more popular to all telephone users; that has been my experience and it has convinced me to my own satisfaction upon that point. In the second place, if it is a residence that is two miles from the switch board, the expense of keeping up that line would amount to four or five times as much per call as the business man who lives within one-half block of the station, and if you are to apply to him an adequate charge for the length of line there would be very few residence telephones you could secure. A flat rate for a residence per call costs usually very much more than a flat rate to a business man who uses his telephone ten to fifty times as much as the residence subscriber, and who is compelled to pay twice as much for his service—he gets ten to fifty times as much service at a cost of twice as much as a residence subscriber, but the residence subscriber to maintain the residence

Digitized by Google

subscriber's line costs the telephone company four to ten times as much as to maintain the subscriber's line in the business district, which is nearer to the exchange; so that the additional cost per call of a residence telephone on the idea of measured service is offset by a very much fewer number of calls, which evens it up, as you could not even it up in measured service—it would be necessary, in other words, to charge a residence subscriber ten cents per call in order to realize the same profit on the operation of his line as it would a business man two cents per call. This would practically exclude residence subscribers, and for that reason I believe that the flat rate in the first place meets with the public approval better than a measured service rate; in the second place it more equally recompenses the operating public for the service. At $1.50 a month to a residence using the telephone ten times a day would be 1½ cents. If it cost ten cents a day to use it ten times, it would be one cent a call, pretty near $3 a month, and a business man would have the use of it thirty times a day and it would be one-tenth of a cent a call. Now the business man to compete with the one cent a call would be 30 cents a day, and he would repudiate your service if his telephone would cost him that much, but the company operates his business 'phone within a short distance from the exchange at a very much less cost than they operate the residence 'phone, therefore they can give a great deal more service for $30 per year and realize the same profit. I do not know whether I make myself clear or not. I thank you.

The Chairman: The next number on the program is by Dr. H. S. Herr of Ottumwa, Iowa. The subject is "Sliding Scale Rates for Exchanges."

Mr. Coleman: I am asked to announce that Dr. Herr cannot be present and his daughter will read his paper.

Miss Herr: I thank you, gentlemen, for it is quite as embarassing for me as it is to you, I am sure, and if any of you fail to hear me, as a woman's voice is apt not to carry as well as a man's, please tell me so, and I will try to talk louder.

THE SLIDING SCALE OF RATES FOR EXCHANGES.

Gentlemen of the Interstate Telephone Association:

It is a source of great gratification to be present to-day. I assure you I would much prefer listening to some of the more able members of this association upon this subject than to attempt to present it to you. I consider it one of the most important and vital subjects before the convention. The flat rate system incorporated into many of the franchises granted to different Independent companies by city and town councils has been the direct cause of more poor service, poor construction and poor maintenance than any other cause that I can think of at the present time. Because of the fact that none of the Independent companies were aware when they began business that to maintain a telephone system it would cost more per 'phone to care for five hundred than for a lesser number. And, therefore, they soon found themselves paying out more money for maintenance and operating than they were receiving. A very popular price among promoters and a catchy price for the public is a rate of $1 per 'phone, this being considered an adequate amount in telephone systems under most favorable conditions for from 300 to 500 subscribers. That is not a sufficient amount to conduct the business and maintain the plant when the number is more.

A large number of telephone exchanges that in the beginning, when their subscribers are few in number, gave excellent service, are now giving poor service, because expenditures consume all the receipts, and there is nothing left for repairs or maintenance. And unless financial relief comes by means of advanced receipts, a very short time will put them out of business.

The eagerness of the Independent telephone people to right the wrong done the public in charging exorbitant rates by the company holding the original patent upon the telephone, was the prime cause in promoting Independent or opposition telephone companies. They, like the hardware men or grocery men, counted that the more service they could sell, the greater would be their profit, prices always being the same. One hundred barrels of sugar, or one hundred barrels of nails can be sold by the merchant for less money per barrel than one, two or three barrels, and still the merchant would make greater profit on his investment by selling the large number at the same price than by selling the small number at the same price. And thus the pioneers of independent telephony, when they turned their attention to the telephone business, thought if they could sell the service of a thousand 'phones, they could make the rate the same, or even less, than if they sold the service of only one-quarter or half that number. The comparison between sugar, nails, and telephone business is not a fair one. When a barrel of sugar is sold, that is the end of it, when a telephone service is sold, it is only the beginning. Forever after there are wires to be taken care of, trouble to chase, lightning and electric currents that burn up

Digitized by Google

the instruments, to be switched off, and the more telephones you have, the longer distances are necessary to reach the subscribers, and many other things must be done. When nails and sugar are sold the merchant receives all his cost and profits; when a telephone is placed only a small portion of the cost is paid in the service, and years are required to balance accounts. But to give telephone service to one thousand subscribers, a central apparatus must be provided at a cost of no less than one hundred times as much as the central apparatus will cost to give service to one hundred subscribers. Ten exchanges of one hundred subscribers at $1 and $2 a month will bring a handsome return to the owners, where one with one thousand subscribers at a cost of $1 and $2 per month will be a positive loss without any provision for maintenance. Still, in each case, a thousand subscribers are served. But this is sufficient to show cause for this paper.

By the sliding scale of rates for telephone companies is meant a scale of rates based upon the number of connections given subscribers in any one system. The importance of such a rate is well understood by the older companies, as shown by the sliding scale of rates as used by the American Bell Telephone Company at the advent of Independent telephone companies.

The value of the telephone to the users is in the number of subscribers who can be reached in any one system, and it is no more than just that the telephone company should receive a proportionate share of the value that the telephone is to those using it, whether for business or pleasure. And it is also fair to the users of the telephone that they should not be required to pay more than is necessary for good maintenance and good service with a fair profit to those who have invested their money in the telephone system. This equality can only be accomplished by the sliding scale of rates. If cost of future maintenance was always known, it would be an easy matter to incorporate rates in telephone franchises. But as this is not the case, it raises a question whether or no it is wise to do so. I am of the opinion that there will be no difficulty along this line if telephone companies will do a fair and honorable business and make their rates proportionate to the service rendered, with a fair dividend for money invested. By maintaining reasonable charges, there would be no danger of competition, unless it should be someone trying to break a weaker company in order to obtain entire control and produce a monopoly in such a manner as to exclude others forever, and then return to the prices charged during the life of the fundamental telephone patent.

What the sliding scale of rates should be necessarily varies with the conditions under which the company must operate. In small companies, where it is not necessary to use tall poles or aerial cable, or conduit work, placing the cables and wires underground, the rate can be less than in cities where all this is required. But no company can do business more successfully under the most favorable conditions in an exchange not to exceed five hundred at a rate averaging less than $1.50 per month for all 'phones. This is usually accomplished by charging $1 for residence 'phones, and $2 for business 'phones. Above that number it will be necessary to advance them a certain small per cent as the number of subscribers are increased.

A number of telephone companies in the state of Iowa have been asked if, in their experience they found the average cost of operating, including all expenses per instrument, increased or diminished with the number of telephones installed, and what would be the number approximately at which a $2 rate for business and a $1 rate for residence on a full metallic system would be profitable.

The manager of the Des Moines Mutual Telephone Company placed the number at four or five hundred. Waterloo Telephone Company, Dr. Bennett, manager, placed the number at four or five hundred. Fort Dodge Telephone Company made the maximum number at eight hundred. The Home Telephone Company of Oskaloosa, at two hundred and fifty. In Iowa City a citizen's committee was appointed by the Commercial Club to investigate the proposed increase of rates by the Johnson County Telephone Company. After thoroughly investigating they reported that it was unprofitable for the company to do business at a $1 and a $2 rate with six hundred telephones in operation, one-half of which were business 'phones and the other half residence 'phones. This committee publicly announced that they were opposed to a raise of telephone rates when they were first placed upon the committee. But after their investigation they were convinced of the necessity of raising the rate to $1.50 and $2.50 until the number reached one thousand subscribers; thereafter 25 cents additional. Same rate to be maintained until the number reached one thousand five hundred, when another 25 cents should be added. This is a fair concession by the committee appointed for Iowa City.

The Interstate Telephone Association should take some action to show its disapproval of the conduct of many Independent telephone promoters in making a flat rate for an unlimited number for service for all time to come, when asking for franchises. This is untenable, because the cost of telephone construction and maintenance vary too much in different cities of the United States, particularly the maintenance, which will average 50 per cent more in some cities than in others, and it is unwise to place the cost of maintenance at less than 10 per cent in any case. More than this, the association should do all in its power to enlighten town and city councils on this subject, so that they will scrutinize more carefully the franchise asked for by telephone company promoters, since such promoters generally organize these companies by issuing stock and bonds, and then construct the cheapest plant possible, taking their profit and leaving the stockholders and bondholders to take care of the situation, who soon find, to their disappointment, that they were caught in an unprofitable

Digitized by Google

investment, and the council is in the awkward position of having required conditions of their telephone company which cannot be carried out, excepting at a great loss and final bankruptcy. City councils are generally selected from the best men of the city, from various trades and business. They want to do the fair thing in such matters, but how can they, when they do not understand the business. It is our duty as an association to agitate this question and furnish proof of the correctness of our position, so that the value of telephone properties may not be destroyed, and many men financially ruined by injurious or unwise legislation, either by the city council or by state legislatures.

Legislation on this subject is sure to come, and we need not fear it, if we do our duty in this matter. Every business man wants every other to succeed. And they will come to our support if they understand the situation. They all want first-class telephone service, and that, like good goods, cannot be bought at the price of shoddy. Above all, be honest with your people. Make your statements plain and truthful, and you will have a hearing which will bring you success.

It was moved and seconded that Miss Herr be tendered a vote of thanks.

Mr. Glantone (Ill.): I have been in touch with this subject to some extent and I have adopted a sliding scale of rates in the management of our exchanges in Pike County, and I have never known of its being adopted any place else except the places that this lady has told us of. A telephone is valuable directly in proportion to the number of people that can be reached over it. Now in the establishment of exchanges I have found that the great difficulty in getting people to take hold is that the price is too high for the number of people that can be reached and I had just drawn up a contract for two or three exchanges wherein I state that the rate shall be 50 cents a month until the number of telephones shall exceed 50 and when there are 50 telephones the rate shall be 50 cents and when there are 52 telephones the rate shall be 52, but in this case I have made it a dollar, and that the customary charge shall not exceed one dollar or two dollars or whatever that may be. I have found that this is a great impetus and in one town where ordinarily I think we would not have had over 75 or 100 subscribers, we have nearly 200 subscribers, and it helps you to secure subscribers, as the people don't have any idea what the number of subscribers will be and they will sign up readily with you. They do not believe in the independent movement as we do who have followed it more closely. I think that that is one of the things that we will have to work out. I think that we can gain a larger subscription to our lines than in any other way we may take hold of.

The Chairman: Gentlemen, we will proceed with the next number on the program, "Toll Rates," a paper prepared by Mr. H. H. Robinson of Cleveland, O.

TOLL RATES.

Mr. Chairman and Gentlemen:

In assigning the subject of "Toll Rates" for my paper I fear that you have unwittingly or otherwise, selected a rather musty old nut to crack, and I doubt if I shall be able to extract the meat from it in the short time allotted to me.

Long distance, or more properly speaking, interurban telephone service was established in the early eighties by various licensees of the American Bell Telephone Company. The rates established for service over these lines were not based upon the cost of producing it from any information I have been able to secure, but rather upon the telegraph rates which at that time represented the only competition. These rates varied in different parts of the country from less than one-half cent to one and one-half cents per mile, and the time limit varied from five to ten minutes, although overtime was seldom charged. It was not until the incorporation by the Bell interests of the American Telephone and Telegraph Company that any considerable time and thought were given to this most important subject.

In the early nineties a rate convention was called by the American Bell Telephone Company and delegates attended from many of the licensee companies. As a result of this convention and the vast amount of preliminary work which preceded it a standard basis of computing rates was adopted, which not only fixed the rate per mile and established the time limit, but also established the method of computing overtime, measuring mileage and computing rates so as to avoid the odd cent. I will state briefly the main features of this schedule. All rates were to be based on a charge of one-fifth of one cent per mile per minute. The time limit adopted by the American Telephone and Telegraph Company was five minutes, and the limit adopted by other licensee companies was three minutes. In computing the mileage it was decided that the air line distance would work a great hardship upon the companies because of the few routes which then existed and the roundabout way which nearly every message had to be carried. It was also decided that pole mileage would work a hardship on the patrons who were not responsible, and should not be required to pay for the failure of the telephone company to provide direct facilities. Therefore, as a compromise, it was decided to use the nearest railroad mileage. Overtime was to be computed at one-third or one-fifth of the initial rate, according to whether a three or five minute sched-

Digitized by Google

ule was used, and in cases where this method of computation produced an uneven number of cents, the minute rate was fixed at the nearest nickel. In order to avoid the large number of uneven rates which would exist if rates were based on the exact mileage, the following table was prepared:

5 miles or under		10c
6—15	miles	15c
16— 24	"	20c
25— 35	"	25c
36— 45	"	30c
46— 50	"	35c
51— 60	"	40c
61— 75	"	45c
76— 85	"	50c
86— 90	"	55c
91—112	"	60c

The only matter of importance not touched on by the Rate Convention was the subject of special rates for night and Sunday service, and it was not until 1896 that the licensee companies adopted the half rate night schedule, and it was not until 1899 that the American Telephone and Telegraph Company followed suit.

In the latter part of 1899, or the early part of 1900, the American Telephone and Telegraph Company changed from a five-minute to a three-minute basis for all rates on either side of Buffalo and Pittsburg. Rates going from one side of this imaginary boundary line to the other side are still based on a five minute period.

In certain parts of the United States, most notably in California, a period of 15 seconds was introduced and has been quite successful owing to the peculiar geography of that part of the country, and the careful way in which the subscribers were educated. One-minute rates have been introduced in various other parts of the country but have not been successful, either from a financial or operating standpoint. The principal reasons for the failure of this short period to succeed were first because of the inability of the companies to furnish facilities in the shape of direct circuits, and second, because of the magnitude of the task of educating so large a number of subscribers separated into small communities, each having several centers of commercial influence.

To make this point more clear, I will say that, from the very careful study I have made of the subject, the fractional minute rate, or even the one-minute rate, will never be practicable until toll line companies are able to furnish a sufficient number of direct circuits between points where it is desirable to establish such rates to promptly handle the business, and also to furnish each direct circuit with an operator at either end having no other business to handle. Furthermore, line patrons will have to be educated to the point of either transcribing or memorizing their proposed conversation before the connection is established.

I will now try to reply to the inquiry, which without doubt is uppermost in your minds: "How did the rate conference arrive at its minute-message-mile-rate of one cent per mile per minute?" When I first decided to prepare this paper I made a strong effort to secure from certain officials of the American Telephone and Telegraph Company the minutes of the first rate conference, as I preferred to quote from them verbatim. I was, however, unable to secure this rather important document, and I must therefore be content to briefly describe the process and line of thought by which the initial rate basis, which is now almost universally used, was devised. Let us create for our purpose a toll line property, consisting of 30 miles of pole line, ten miles of which consists of the very best construction, 40 30-ft. 7-inch top poles to the mile, with an ultimate capacity of 50 wires and a present capacity of 20, we will suppose that the second ten miles represents the average construction of 30 25-ft. 6½-inch top poles to the mile, with an ultimate capacity of 20 wires and a present capacity of 10 wires; the third ten miles to consist of a 25-ft. bracket line, built upon the cheapest possible specifications, and used presumably as a feeder to reach some small town. We wish to discover what rate we can safely make per minute-message-mile and show a profit on our investment. Our first section will cost us approximately $950 per mile, or $9,500; our second section will cost approximately $500 per mile, or a total of $5,000; our bracket line $150 per mile, or $1,500, giving us a total investment for this imaginary property of $16,000. Figuring interest at 5 per cent, our fixed charges will be $1,600. Operation and maintenance, including taxes and general expense, and extraordinary maintenance, may be safely figured at 10 per cent more. We must therefore earn $3,200 per annum on the $16,000 investment before we can show any profit for stock. We cannot, as in an exchange proposition, base our prospective earnings upon our number of subscribers and our average earning per subscriber, for toll business is strictly a measured service, and no matter how good our facilities, we cannot handle business until it is offered. The telephone day averages from four to seven hours per day, according to locality, and from several hundred peg counts which I have examined the circuit load varies from one-half message per circuit mile per day to three messages per circuit mile per day. As we wish to be conservative, we must adopt the minimum figures if we would have a safe rate. Now this little imaginary system of ours contains 310 circuit miles. On the basis of one-half a message per circuit mile per day, we would handle 155 three-minute messages per day per circuit mile, and if these messages averaged ten miles, as they probably would, we would handle 1,550 message miles per day. To reduce this to minute-message-miles we multiply by three which gives us 4,650 minute-message-miles per day, or 1,674,000 minute-message-miles per year. Now we have seen that we must earn at least $3,200 per year in order to cover our interest, depreciation, operation and maintenance, so by dividing $3,200 by 1,674,000 minute-message-miles we find that we must charge and receive .0019 of one cent per minute-message-mile. The Bell rate conference decided upon .002 of one cent per minute-message-mile, and the result of our

Digitized by Google

little computation shows that by charging that rate we will still have .0001 of one cent per minute-message-mile to spare, on the basis of the most conservative figures we can possibly use. Please bear in mind that aside from the estimated circuit load the figures which I have used are selected arbitrarily and mean nothing except to demonstrate the line of thought.

This basis of computing rates is being used to-day by nearly all of the larger Independent toll line companies and is found to be profitable. As to the future, it is difficult to anticipate the readjustments which are bound to come as labor and material increase in cost, but, as a personal opinion, which you can accept for what it is worth, I would say that I believe that improvements in operating and advances in the art will more than offset the increases in construction and maintenance. For the present we stand in urgent need of uniformity, for there is no one branch of the business where the lack of it is so sadly felt as in this great question of toll rates. In nearly every other part of the business details of operation have an effect upon the local situation only, but their effect on toll line service are as far reaching as the country itself.

Mr. Goldsboro, chief of department of electricity of St. Louis, was then introduced and gave a five minutes talk about the World's Fair at St. Louis in 1904. He extended a cordial invitation for the convention of 1904 to be held in St. Louis while the fair was in progress. The matter was discussed moved and seconded that the matter be referred to a committee to report to-morrow morning and that they recommend such amendment to the constitution as will permit us, if we see fit to accept this invitation, to hold our convention at such time as the exposition will be in progress.

Motion carried.

Mr. Layne of Missouri and Mr. Purcell of Kentucky were appointed on the committee.

The Chairman: We will now proceed with our regular program. The next is a series of papers. I presume they are all brief, but very important—they are in regard to the restrictions by municipal authority and snyopsis of the law of the different states with reference to the telephone business. The first is from Ohio, a paper by Mr. W. F. Lauback, Akron, O.

RESTRICTIONS BY MUNICIPAL AUTHORITY AND SYNOPSIS OF THE LAW.

Mr. President and Gentlemen of the Interstate Independent Telephone Association:

When entering upon the duties of manager of a telephone company a friend incidentally remarked, "You will now realize what trouble is, if you never have before; for when you begin catering to the whole public grief begins." I can now add—"and continues." The varied experiences of each succeeding day soon taught me to regard that man as a philosopher. This no doubt voices the sentiments of each individual manager or superintendent of corporations whose property, to a certain extent, lies under the open skies, and is therefore at the mercy of the elements and society.

(With the kindly pardon of our secretary) I beg to substitute as a title for this paper the buffeting and caressing bestowed by a society upon telephone corporations and their managers in the state of Ohio.

This substitution of a title is more to my liking because it is less scented with the odor of the lawyer's sanctum-sanctorum (I do not refer to usual physical odor, that of a bull dog pipe or cheap cigarette). I, however, hope to obtain the same end as the printed subject assigned me.

For convenience of treatment let us first consider a few of the buffetings and afterwards the caresses, as we proceed and thanks be to a kind providence for so molding society as to bestow what we believe to be merely an equal portion of each. "Laugh and the world laughs with you," that the subject is of vital importance to the interests here represented none will gainsay. Its vastness is equally impressive to him is to confine his words to such numbers as good judgment might dictate for the present occasion. In view of this fact, let us at once proceed to our task.

A telephone company legally organized under the laws of the state of Ohio (and which is an easy matter under the wise counsel of even a mediocre genius who makes the law his hope of luxury), and we are next face to face with a town or city council, or board of commissioners, or what is more unfortunate perhaps in some of our cities, both council and board of commissioners, whose good graces must be implored and an ordinance of franchises passed by a majority of affirmative vote of the full membership of such body or bodies. This process must be repeated twice after the first reading; and at separate meetings (unless the rules be suspended) before the ordinance becomes law, and an important part of the mantle which enfolds and shields telephone, telegraph, electric light and similar corporations against as frequent vicious attacks of those who profit by or are directly and indirectly benefited by such corporations. Monstrosities and oppressors of mankind whose officers and managers represent all that is vile in moral degradation and death. Alas! "Man's inhumanity to man makes countless millions mourn." Realizing the truth of this sentiment let us be more considerate in our judgment of those who compose our bodies of legislation, both municipal and state. Remembering ever "where the prejudice is strong the judgment weak."

Securing franchises for an "Independent" telephone company has always required time and the expenditure of the best energy of the attorney, merchant, manufacturer, banker, la-

Digitized by Google

borer, and last, but by no means least, the politician. At this stage in the evolution of tne local "Independent" company our common enemy in his various guises is sure to come upon the scene, and finding ready response from a certain element in all localities indirectly preys upon or buffets us through the municipal boards. One of the Latin clergy gave utterance to the expression, "Vox-humana, Vox-Daea." The voice of the people is the voice of God. However, the voice of the people is not the only factor necessary to mold the thought, let us rather say deed, of the part of society on whom we are dependent for our franchise or ordinance.

Public sentiment, especially in our large cities, has long been in favor of the Independent telephone. It is the only defense a long suffering people have found against the intolerant insolence of managers, inferior service (the result of antiquated equipment), toll and local rates that indicates a prolonged strike in the anthracite coal regions, and in many instances a perversion of law and the defiance of private and corporate rights, indulged in by those who have attempted to monopolize the field, and have disregarded the common, but primary principle in all law, "The brotherhood of men." In these days of political bossism one is justified in the belief that the thought is not always father to the deed, among at least a portion of those who make up the personnel of our councils and boards in the average municipality. The boss must, however, be found, and either employed or assured that Christmas will come to him immediately upon delivery of a franchise. In other words, you say to him, "We desire a franchise embodying such and such conditions, and are ready to receive it, C. O. D." At the same time be sure to convince him of your sincerity and financial standing by some tangible token. In the course of time (and it largely depends upon the susceptibility of his lawmakers), but sooner or later you will have your desire—"if you are good." Be ever prepared to receive it upon the terms agreed upon, in other words, be thoroughly honorable and exercise your honest scruples now; if you never have before or expect to again.

If you have found it expedient to hold occasional conferences do this in the private dining room of a good hotel in a neighboring city; and for the sake of promoting sociability order a nine-course wine dinner of twelve or fifteen covers; don't let it appear as a credit item on the day of receiving your franchise and final reckoning; it would smack of cheapness and antiquated economy; and might make you an outcast, and your name a byword in the community. This is possibly an exaggerated picture of which might transpire in Ohio; but from reliable information I am led to believe it would apply equally to any other state in the Union, with the possible exception of Missouri and Illinois.

In all sincerity, gentlemen let it be said the political boss is an absolute necessity in the present state of society, and will be so long as society prefers him to the statesman. He merits our admiration and commands our respect. Say what you will, he is a hard working and often times much perplexed man, directing affairs of vast proportions and vital concern to the body politic.

We have now, by means of the intricate processes of the law and other incidentals, procured a franchise. Let us hope for our own welfare, we have not been overzealous in our efforts, unadvisedly offering our superior service at rates which has brought us three to five times as much business as was anticipated when computing the cost and the revenue derived from our plant. The sovereign authority which granted us our franchise now also secures to the public its rights by the same franchise.

A franchise once granted and accepted by an operating company if it be framed in harmony with the statutes, becomes a most stubborn and obstinate matter in case pruning of objectionable features might be desirable. We here quote from the opinion of a circuit judge: "It seems to us manifest that it is, and it certainly should be the law that the right to decide as to the use of the streets of a city by corporations of this character should be entrusted to the municipal authorities under such reasonable regulations as they may prescribe."

Various operating companies in the state of Ohio, after three to five years' experience, find themselves face to face with a franchise from which it would be very desirable to eliminate certain features, especially the matter of rates. A franchise, however, becomes operative upon its acceptance by the grantee, and the same authority granting its original features must be invoked for modifications before any deviations are legally admissible.

Let us briefly refer to some of the provisions in franchises which are at least dangerously near the illegal. One of the most frequent, perhaps, is the clause wherein the telephone company agrees to furnish a certain number of free telephones for the use of the city and county officials semi-dignitaries.

Franchises have been accepted embodying such clauses, because of the conditions the independent telephone companies have had to cope with, and for the further reason that we have had to play policy in order to receive a hearing at all. Franchises embodying such characteristics are not in harmony with the statutes governing their issuance. But to oust a company when once its plant has been installed and operating under a legal franchise is next to an impossibility, though an original franchise may have expired and the company seek an extension by a new franchise; and upon terms of its own making, as witnessed by the various cases in which such questions were involved. We cite one instance only, of the many on record in the state of Ohio, wherein the city of Dayton brought an action in the circuit court to oust a telephone company from the streets of the city upon the ground that its franchise had expired and it was "exercising a franchise privilege and right in contravention of law and without authority."

Digitized by Google

Now list to what we may style the caresses of one of our celebrated jurists. We give his opinion nearly in full as reported in Vol. 14, Ohio circuit court reports. It covers a number of points of vital concern to telephone men, and is truly multum-in-parvo. The learned judge says: "Without stating the issues which are sufficiently familiar to council we proceed at once to the question whether, under the testimony herein, the relator (the city) is entitled to the relief sought.

"Section 3461, Rev. Stat., provides that "the mode of use shall be such as shall be agreed upon between the municipal authorities of the city or village and the company; and if they cannot agree or the municipal authorities unreasonably delay to enter into an agreement, the probate court of the county, in a proceeding instituted for the purpose, shall direct in what mode such telegraph line shall be constructed along such street, alley or public way, so as not to incommode the public in the use of the same."

The contract under which the company has occupied and used the streets, etc., of the city has expired, and for two years past negotiations have been pending between the city and the company looking to an extension or renewal of the franchise but thus far no agreement has been reached. (Here clipping.)

An ordinance renewing the franchise was submitted to the council by the board of city affairs with the recommendation that it be passed. It was referred to the committee on law in conjunction with a special committee. This joint committee reported back the ordinance, recommending amendments. Subsequently said ordinance was recommitted. The joint committee again reported back the ordinance with certain amendments and said report was adopted. Subsequently said amendments were agreed and the ordinance as amended was passed and referred to the board of city affairs for approval. This was on the 14th day of April, four months after the commencement of this action.

No action having been taken by the board of city affairs, that body on June 26th was requested by the council "To either concur in the telephone ordinance or return the same to council," and again, on November 13th a resolution was adopted by the council requesting the board of city affairs to return said ordinance for consideration by this body before any final action was taken by the board."

November 27th said ordinance (having been returned to council on the 25th of November) was referred again to said committee on law and said special committee, where, so far as we know, it still reposes.

The testimony shows that pending these negotiations interviews were had between members of the council and representatives of the telephone company, in which the latter declared that the company would not assent to the ordinance proposed; the objection being the fixing therein of the rentals to be charged the patrons of the company for the use of its instruments, and this is urged as evidence of the refusal of the company to come to an agreement in the premises.

This provision was a violation of the last clause of section No. 3461 above quoted, which declares that "nothing in this section shall be so construed as to authorize any municipal corporation to demand or receive any compensation for the use of a street, alley or public way, beyond what may be necessary to restore the pavement to its former state of usefulness." This was an attempt to secure indirectly a benefit which it cannot directly demand or receive.

The company was justified in refusing to assent to this. It was not bound by any legal action and the city could not lawfully insist upon it. It appears that the city authorities are now formulating an agreement. And we find from the evidence that this is true and that the company is not at fault.

Again, it is shown that during the period covered by the contract the city used and still uses a larger number of the company's poles for its police and fire department wires and that it has in use, free of charge for rental service, about eight of the company instruments.

Is the city in a position, under such a showing, to demand that the company shall be ousted from the use and occupancy of the street, and that it shall remove its plant, representing an enormous investment, and thus deprive the public of the advantage of telephone service, merely because the company declines to assent to an illegal condition?

Certainly no relief should be granted until it is made to appear that no agreement can be made and that the company after such failure to agree, delays unreasonably to apply to the probate court to fix the mode of use, as described by law."

Writ refused and petition dismissed.

Let us now hasten to the construction of a modern Independent plant; here again we meet the direct as well as indirect assaults of the common enemy of the Independent. And with his assumption as sovereign ruler of at least the earth, if not the entire universe, has so conducted himself in the matter of abuse of right of way privileges in time past as to have left a legacy of an unsavory character to all subsequent companies desiring to construct lines through rural districts. In the matter of rural construction work, especially by the abuse of a privilege instead of a considerate and reasonable exercise of it, incalculable damage has been done and impression created upon the rural mind which makes it at once suspicious of any one mentioning the word telegraph or telephone.

Section 3454 reads: "A magnetic company heretofore or hereafter created, may construct telegraph lines from point to point along and upon any public road by the erection of the necessary fixtures, including posts, piers and abutments necessary for the wires, but the same shall not incommode the company in the use of such roads."

A portion of section 3455, "but it shall be unlawful for any such company or companies and the owner or owners of rights of way to construct for the exclusive use thereof for telegraph purposes."

Digitized by Google

Section 3457, in part, reads: "No such company shall, without the consent of the owner thereof, in writing, enter a building or edifice, or use or appropriate any part thereof or erect any telegraph poles, piers, etc., in yard or enclosure within which an edifice is situated, or, in cases not provided for in section 3461 (which section refers to the mode of construction and authority for the same in villages and cities) erect any telegraph poles, pier, abutment, wires or other fixtures so near to any edifice as to occasion injury thereto or risk of injury, in case such pole, pier or abutment be overthrown, nor injure or destroy any fruit or ornamental tree."

In reference to crossing over or under leads of other companies, section 3458 states in part: "And no such company shall erect poles, piers, abutments, wires or other necessary fixtures in such close proximity to any other line of magnetic telegraph authorized by law to be constructed as to interfere mechanically with the practical working of such telegraph."

In crossing railroad property section 3459 prescribes the law in a general way, and which in part states, "The right of such company to use lands held by a railroad company for the permanent structures of such telegraphs shall be limited to the land which lies within five feet of the outer limits of the right-of-way of the railroad company, where it is practicable to erect the line within those limits." Further provisions are made in this section for the mode of procedure in case where it is not practicable to comply with the first paragraph of this section as quoted. Other requirements, such as the report to the state commissioners of railroads, providing for clearances above rails, double cross-arming, etc., are familiar to all construction men.

Section 3471: "The provisions of this chapter (meaning chapter 4, embracing all sections herein referred to) shall apply also to any company organized to construct any line or lines of telephone, and every such company shall have the same power and be subject to the same restrictions as are herein prescribed for magnetic telegraph companies."

These quotations from a few of the many sections relative to what may be termed a mode for the construction of country lines, especially, will suffice for our present purpose. The simple and seemingly comprehensive language of these statutes would seem (to the uninitiated) to grant to a telephone company unlimited rights upon the public highway, so long as wires were sufficiently high to clear a load of hay and poles sufficiently removed from the actual wagon track to clear a load of booze some member of the public might be taking home to keep him warm.

But not so; here is where the great doctrine in law, "public policy," plays a long suit. It will be well to remember that highways were originally created for the convenience of public travel by the appropriation of property (that is, land) from the adjoining or abutting property, and such property holder has the right to a fee therefrom when used for other purposes than that of public travel, hence a steam or electric railroad has rights upon the highway paramount to those of the telephone company. The following quotation from one of our celebrated Ohio circuit judges is very pertinent at this juncture: "Every grant in derogation of the right of the public in the free and unobstructed use of the streets, or restrictive of the control of the proper agencies of the municipal bodies over them, or of the legitimate exercise of their powers in the public interest, will be construed strictly against the grantee and liberally in favor of the public and never extended beyond its expressed terms when not indispensable to give effect to the grant."

Let me add a word by way of a moral: "If you intend building country lines or trimming trees, secure right-of-way and pay for it before you begin."

We now come to the operative stage; you ask how can we be buffeted here by any legal authority? Well, it is true that in the operation of a plant from the manager's standpoint, it is nearly all a bed of roses—caresses as it were (especially so long as the automatic boards do not eliminate the fair operator from the exchange).

It may be well for us to know that there are restrictions, also, in the matter of handling messages. We here quote section 3462: "Every company incorporated or unincorporated operating a telegraph line in this state, shall receive dispatches from and for other telegraph lines, and from and for any individual, and on payment of its usual charges for transmitting dispatches, as established by the rules and regulations of the company, shall transmit the same with impartiality and good faith, under a penalty of one hundred ($100) dollars for each case of neglect, or refusal so to do, to be recovered with cost of suit, by civil action in the name and for the benefit of the person and company sending or forwarding or desiring to send or forward the dispatch."

Also section 3463: "When the person who sends a dispatch desires to have it forwarded over the lines of other telegraph companies, whose termini are respectively within the limits of the usual delivery of such companies, to the place of final destination and tenders to the first company the amount of the usual charges for the dispatch to the place of final delivery, the company shall receive the same and, without delaying the dispatch, shall pay to the succeeding line the necessary charges for the remaining distance, and the succeeding line shall accept the same and forward the dispatch in the same manner as if the sender had applied to it in person and pay the usual charges, and for the omission so to do it shall be liable to take penalty, as provided in the last section."

We leave these quotations from the statutes with you without further comment, other than calling attention to a quotation in connection with a case before the circuit court of the third district: "These sections of the statute are penal, and being such must be strictly construed."

I cannot refrain from taxing—no, not your

Digitized by Google

plants; I know they are already taxed beyond endurance, especially in Ohio. To speak of further buffeting by the authority of law "Cole Law," passed and in effect April 14th, 1902, as one of the "very finest" illustrations of heaping "insult upon injury," "striking a man when he is down," taking one's underwear after the scriptural injunction of gracefully giving a cloak after one's coat has been taken by process of law. I quote such paragraphs and parts as directly applying to telephone companies from this new section of the statute:

"In case of telegraph and telephone companies the entire gross receipts (including all sums earned or charged, whether actually received or not) for the year then next preceding the 1st day of May, from whatever source derived, whether message, telephone tolls, rentals, or otherwise, for business done within this state of each office within this state (giving the name of the office) and the total gross receipts of the company for such period in Ohio from business done within Ohio."

"The board may also consider the reports filed with the auditor of state by express, telephone and telegraph companies under the provisions of section 2778 Rev. Statutes of Ohio."

"It shall be the duty of the auditor of state, in the month of November, annually to charge and collect from each electric light, gas, natural gas, pipe line, water works, express, telegraph, telephone, messenger or signal and Union Depot Company doing business in this state, a sum in the nature of an excise tax to be computed by taking one percentum of the amount fixed by the state board of appraisers and assessors as the gross receipts of such company for business done within the state of Ohio for the year then next preceding the 1st day of May and certified to the auditor of state."

I shall not detain you with facts and figures to substantiate my charges against the measure as the "unkindest cut of all." I have such figures, but they are for family or for private use.

Time forbids reference to other matters, which could consistently and profitably be treated under this general head. Trusting I have not worried you and that I shall not be in danger of being waylaid by any of the auditors, I wish to thank you most heartily gentlemen.

The chairman annouced that Mr. Alderman of Nevada, Iowa, and Mr. Harper of Madison, Wis., were not present and their papers were not read.

The following is Mr. Alderman's paper, entitled

RESTRICTION BY MUNICIPAL AUTHORITY, AND SYNOPSIS OF THE LAW.

Code of Iowa, Sec. 775. Regulations as to electric wires. Cities and towns shall have the power to authorize and regulate * * * telephone * * * wires, and the poles and other supports thereof by general and uniform regulation and to provide the manner in which, and places where, the same shall be placed upon, along or under the streets, roads, avenues, alleys and public places of such city or town, and may divide the city into districts for that purpose.

Sec. 776. Granting Franchises—Question Submitted. No franchise shall be granted, renewed or extended by any city or town for the use of its streets, avenues, highways, alleys or public places, for any of the purposes named in the preceding section, unless a majority of the legal electors voting thereon vote in favor of the same at a general or special election. The council may order the question of granting, renewal or extension of any such franchise submitted to a vote at a general election, or at one specially called for that purpose, or the mayor shall submit said question to such vote upon the petition of twenty-five property owners of each ward in a city, or fifty property owners in any incorporated town. Notice of such election shall be given in two newspapers published in said city or town, if there are two, if not, then in one, once each week for at least four consecutive weeks. The clerk shall prepare the ballots and the proposition shall be submitted as provided for in the chapter on elections. The party applying for the franchise, or for a renewal or extension thereof, shall pay all expenses incurred in holding the election.

Any city or town by complying with the law may elect park commissioners, and when so elected said park commissioners—

Sec. 875. * * * Shall with the advice of the city engineer superintend the * * * stretching or laying of telephone * * * wires, in the manner provided by the ordinance of such city (or town). In Iowa we have a few cities under special charter. In these the law is somewhat different than in all other cities and towns. The difference is, however, so small and the limitations so nearly alike, that I do not here give them. Any person desirous of operating in one of such cities can by writing me obtain a synopsis of the law applicable.

Sec. 2158. Right of Way. Any person or firm, and any corporation organized for such purpose, within or without the state, may construct a * * * telephone line along the public roads of the state or across the rivers or over any lands belonging to the state or any private individual and may erect the necessary fixtures therefor. When any road along which said line has been constructed shall be changed the person, firm or corporation shall upon ninety days' notice in writing remove said lines to said road as established. The notice may be served upon any agent or operator in the employ of such person, firm or corporation.

Sec. 2159. How Constructed. Such fixtures shall not be so constructed as to incommode the public in the use of any road or the navigation of any stream; nor shall they be set up on the private grounds of any individual without paying him a just equivalent for the damage he thereby sustains.

Sec. 2160. Damage Assessed. If the person over whose land such * * * telephone line passes claims more damage therefor than the proprietor of such lines is willing to pay, the amount thereof may be determined in the same

Digitized by Google

manner as provided for taking private property for works of internal improvement.

Sec. 2161. Inability for Refusing to Transmit Messages. If the proprietor of any * * * telephone line within the state or the person having the control and management thereof, refuses to furnish equal facilities to the public and to all connecting lines for the transmission of communications in accordance with the nature of the business which it undertakes to carry on, or to transmit the same with fidelity and without unreasonable delay, the law in relation to limited partnerships, corporations, and to the taking of private property for works of internal improvement, shall not longer apply to them, and property taken for the use thereof without the consent of the owner may be recovered by him.

Sec. 2162. Penalty. Any person employed in transmitting messages by * * * telephone must do so with fidelity and without unreasonable delay, and if anyone wilfully delays thus to transmit them or intentionally transmits a message erroneously, or makes known the contents of any message sent or received to any person except him to whom it is addressed, or his agent or attorney, or wilfully and wrongfully takes or receives any * * * telephone message, he is guilty of a misdemeanor.

Sec. 2163. Liable for Mistakes. The proprietor of a * * * telephone line is liable for all mistakes in transmitting or receiving messages made by any person in his employment, for any unreasonable delays in their transmission or delivery, and for all damage resulting from failure to perform the foregoing or any other duty required by law, the provisions of any contract to the contrary notwithstanding.

Sec. 2164. Negligence Presumed—Notice of Claim. In any action against any * * * telephone company for damages caused by erroneous transmission of a message, or by unreasonable delay in the delivery of a message, negligence on the part of the * * * telephone company shall be presumed upon proof of erroneous transmission or of unreasonable delay in delivery and the burden of proof that such error or delay was not due to negligence upon its part shall rest upon such company, but no action for the recovery of such damages shall be maintained unless a claim therefor is presented in writing to such company, officer or agent thereof within sixty days from the time cause of action accrues.

Sec. 3497. (Action) Against Common Carriers. An action may be brought against any * * * telephone company, and the lessees, companies or persons operating the same, in any county through which such * * * line passes or is operated.

Sec. 3529. Provides that service of original notice may be made upon any agent of the telephone company.

Sec. 4807. If any person * * * maliciously cut, burn or in any way break down, injure or destroy any telephone * * * post, or in any way cut, break or injure the wires or any apparatus thereto belonging, he shall be imprisoned in the penitentiary not more than five years, or be fined not exceeding five hundred dollars and imprisoned in the county jail not exceeding one year.

Sec. 4816. Tapping telegraph or telephone wires. Any person who shall wrongfully or unlawfully tap or connect a wire with the telephone * * * wires of any person, company or association engaged in the transmission of messages on telephone * * * lines between the states or in this state, shall be fined not more than five hundred dollars, or imprisoned in the county jail not exceeding six months.

Taxation. Stock in telephone companies not taxed. Taxation of the plant is fair; is made by the executive council (composed of the governor and other state officers) on the actual value of the property. The taxes are paid by the company.

Our courts have treated the telephone litigation in the same light a stelegraph. The precedent of the telegraph being followed as closely as the individual case will permit.

The Chairman: Gentlemen, the next paper on the program is by Mr. Savage of Champaign, Ill. These papers all relate to the same proposition, the legal situation in the different states.

Mr. Ware of Michigan was next called upon. Mr. Ware said:

Back in 1883 the Michigan Telephone Company, with our late Senator McMillan as its president, was able to secure the passage of an act, special telephone act, which gives to the telephone companies the right to occupy any highway in the State of Michigan without securing permission from any municipality or any individual, so that in that respect the Michigan telephone people are especially favored.

The railroad crossings are secured from a railroad commissioner. We do not have to do business with individual railroad companies, excepting to secure as a rule their consent to the hearing, we agreeing to the decision of the railroad commissioner to conform to the law in the placing of wires.

As to trees in the State of Michigan the telephone companies have the right to trim them in a reasonable manner, and in a decision of the Supreme Court in connection with the Central Telephone Company at Kalamazoo some two or three years ago it was very clearly stated that inasmuch as the company would have to put up its wires to ascertain just what trimming would be necessary and that the trimming would have to be of such a character as would clear the wires, therefore the companies would be the ones to judge as to the amount of trimming, but that it should be reasonable. We have no right in Michigan to cut down a tree without permission, but we can trim trees in such manner as will clear the wires and that, of course, is all that any one desires.

The municipalities have no right to enforce the taking of a franchise by a telephone company. The Michigan Telephone Company stands upon its right under the general law, under which the telephone companies are incorporated in Michigan that they do not have

Digitized by Google

to take a franchise and have refused to take franchises in any city, in which the franchise offer contained a regulation as to rates or service. The independent companies as a rule with few exceptions, have voluntarily taken franchises which included the regulation of rates, which has been of considerable advantage to the independent companes at those points where there has been severe competition, the public having confidence that the independent company, if it should secure control of the situation would not be able to increase its rates beyond that limited by the franchise, while the Bell Company, if it secured control of local conditions, would be able to make such rates as it might determine best in the far distant future, or the near future, as the case might be. The result has been that the independent companies have found franchises taken to be of great advantage to them. The attorneys for the American Bell Company claim that a franchise inasmuch as the states cannot force the telephone company to accept one, is of no value, it being because it is what might be termed ultra vires in law, which means that the city stands in the same relation to the law as a person who may be an idiot, that they have no ability, no right and no power to enter into a contract. I think that, however, is covered—the Independent Telephone people claim that it is covered in connection with a very nicely—in connection with a decision here in Chicago, Chicago General Railway Co., I believe is the name of the case, in the 176 Ill., in which these words were used by one of the judges:

"Even if the ordinance was ultra vires, it could not be treated as prohibited and against public policy and the company having accepted it, cannot now repudiate the contract."

In our state the company with a franchise is bound as between the municipality and the company the same as though the law required them to have a franchise. The law in the State of Michigan and in other states which do not compel the companies to get a franchise, is that once having made a contract, the same as between individuals who have made a contract, it is binding between the individuals, and so it is the same way, it is binding between a municipality and telephone company.

In Michigan we have a tax of three per cent upon the gross income of the company. This is in lieu of all other taxation. It has its advantages and while that tax seems to be quite heavy, quite a heavy burden and heavier than is found against other lines of business, yet it has its advantages I never realized, perhaps its advantages as I did after it was put into effect, and after hearing the papers read this afternoon on this subject. That tax goes into the school fund, I believe, I will state. And as far as it has been ascertained up to the present time, real estate and property occupied for telephone purposes is not taxed under that law, so that the only tax we pay is paid before July 1st or by July 1st of each year, and is based upon the sworn statement of each company, and each company must file that statement between the 1st of January and 1st of June in eah year, which contains a statement as to the actual gross income of the company for the preceding year, ending December 31st. We get a large amount of data and information regarding mileage, poles, wire, telephones, etc., which is inherited, if I can use the term, into this law from a previous law, but there is little or no attention paid to that portion of our report, the most important question being the gross income and the three per cent tax collected thereon. So we pay no other tax, no municipal tax or anything of that character and it makes a very clean and very proper settlement of the tax question.

In our state with some amendments to our articles of incorporation—if we wish to secure an amendment, by one-tenth of one per cent tax, and having a majority of the stockholders of the company sign the amendment—a meeting of the stockholders is not essential, as long as a majority of the stockholders sign it—there is a special provision in the law against cutting wires and I believe that that is the only special legislation there is other than what I have stated excepting one paragraph, which provides for the accepting of business from telephones, which law we are uncertain about as to just what the meaning of the law is, so that there never has been any effort to try to enforce the application of this law, although there are some who think that the law is broad enough to enable such enforcement. I take it, however, as far as the law is concerned, that it cannot be done, and I know it is impractical as far as forcing them to do it, if they do not wish to do it. I would be glad if the secretary wishes that an opportunity be given me to make a written report along the lines, and quoting two or three decisions which may be of interest to you in regard to tree trimming and the occupying of the highways. Michigan is very favorable in decisions that have been made to the telephone people in those matters.

The Chairman: Gentlemen, one or two anouncements: the auditing committee provided for yesterday will be as follows: Mr. Frazee of Indiana, Mr. Valentine of Wisconsin, Mr. Bandy of Iowa.

The Chairman: The next paper is by Mr. Pickhardt of Huntington, Ind.

RESTRICTIONS BY MUNICIPAL AUTHORITY, WITH A SYNOPSIS OF THE LAW OF INDIANA.

Mr. President and Gentlemen of the Interstate Telephone Association:

I don't know why I was selected to represent the state of Indiana upon this subject and am quite sure that anyone of the telephone men from the Hoosier state here to-day would have done the subject greater credit. This is purely a law proposition. I am no lawyer nor a son of a lawyer, hence was inclined at first to decline the invitation to take part in the program of this meeting, but having never shirked any duty involving the interests of Independent

Digitized by Google

telephony, and fully realizing the determination of your secretary, my esteemed friend, Mr. Coleman, to make this meeting a success and have me represented on the program, I accepted. After that I took into my confidence a lawyer and I now stand ready to vouch for whatever "we" may have to say on this subject as having the sanction of the law.

The state of Indiana, by statute, places the following restrictions upon telephone companies, to-wit:

First—By the state, in the matter of incorporation, in that the articles of incorporation must set forth:

1. The name of the company.
2. The counties or places within which such company proposes to operate.
3. Amount of capital stock and the number of shares into which it is divided.
4. Must be signed by each of the incorporators giving his residence and amount of stock subscribed for by him, five of whom (if there be that many signers) shall acknowledge the execution of such articles before some officer authorized to take acknowledgments of deeds, and the articles shall thereupon be recorded in the office of the secretary of state, for which a fee must be paid as follows, viz., For recording, $1.50; charter fee, $10 up to $10,000 capital stock. If the capital stock exceeds $10,000 the charter fee is one-tenth of one per cent of the capital stock. In case of consolidation of two or more companies the consolidated stock is taken as a basis and fees charged as above.

The state also fixes the liability of the individual stockholder by providing that he shall be liable in his individual capacity for any contract, debt or engagement of his company to an amount, over and above his stock, equal to the face value of the stock.

The state further requires incorporated telephone companies to keep a stock book at their office or principal place of business containing the names of stockholders, alphabetically arranged, showing their respective place of residence and number of shares held by them severally, and the time they became owners of the same, which book shall at all business hours of the company be subject to the inspection of creditors, stockholders or their representatives. For failure to keep this book, to make the required entries, or to exhibit same as directed above renders the corporation liable to the injured party in the sum of fifty dollars for every such instance or refusal or failure and all damages resulting therefrom, and in addition shall pay to the state for the use of the common schools the sum of fifty dollars for every day of such failure. This last penalty may be recovered by suit in the name of the county in which such corporation is situated.

Secs. 3433-3434 Burns Statutes 1901.

The restrictions above mentioned apply especially to telephone corporations organized under the laws of Indiana.

The state places restrictions upon companies organized in either state by requiring all foreign corporations to have and maintain a public office in Indiana, to have an agent or representative in Indiana on whom service of process may be had and such foreign corporation shall be subjected to all the liabilities, restrictions and duties which are or may be imposed upon corporations of like character organized under the general laws of the state. Foreign corporations, excepting railroad and telegraph companies, are not permitted to mortgage or encumber their property for debts or liabilities created in any other state to the detriment of resident creditors of said company.

Foreign companies by which is meant those incorporated in any other state or county than Indiana, must file certified copies of their incorporation with the secretary of state, together with a sworn statement of the proportion of the capital stock of said corporation which is represented by its property located and business transacted in the state of Indiana, must pay incorporating taxes and fees equal to those required of similar corporations formed under the laws of the state.

Foreign companies failing to comply with the foregoing requirements are liable to a fine of $1,000. Sections 3461a, 3461b, 3461c, Burns 1901.

Telephone companies are also restricted by being liable to taxation of which no better idea can be obtained than from the words of the statute itself, which statute reads as follows:

Sec. 8479. "Every telephone company doing business in this state, whether incorporated under the laws of this state, or of any other state, or of any foreign nation, shall annually, between the first day of April and the first day of June, make out and deliver to the auditor of state a statement, verified by the oath of the officer or agent of such company making such statement, with reference to the first day of April next preceding, showing:

First—The total capital stock of such association, company, co-partnership or corporation.

Second—The number of shares of capital stock issued and outstanding and the par or face value of each share.

Third—Its principal place of business.

Fourth—The market value of said shares of stock on the first day of April next preceding, and if such shares have no market value, then the actual value thereof.

Fifth—The real estate, structures, machinery, fixtures and appliances owned by said associations, company, co-partnership or corporation and subject to local taxation within the state, and the location and assessed value thereof in each county or township where the same is assessed for local taxation.

Sixth—The specific real estate, together with the permanent improvements thereon, owned by such association, company, co-partnership or corporation situated outside the state of Indiana, and not used directly in the conduct of the business, with a specific description of each such place, where located, the purpose for which the same is used, and the sum at which the same is assessed for taxation in the locality where situated.

Seventh—All mortgages upon the whole or any of its property, together with the dates and amounts thereof.

Digitized by Google

Eighth (a)—The total length of the lines of said association or company.

(b)—The total length of so much of their lines as is outside of the state of Indiana.

(c)—The length of the lines within each of the counties and townships within the state of Indiana.

From the statement above provided for and from such other information as the state tax commissioners may obtain they ascertain as best they can the true cash value of such property.

Municipalities in our state possess such varied and different powers of restricting telephone companies that it renders it necessary to examine this subject from the size of the municipality.

In the cities of more than 100,000 population this whole matter is saturated to the Department of Public Works which has for its head a board of three members with a great many duties and powers, among which is the power "To authorize and empower by contract telegraph, telephone companies to use any street, alley or public place in such city, and to erect necessary structures therein, and to prescribe the terms and conditions of such use, to fix by contract the prices to be charged to patrons: Provided, that such contract shall in all cases be submitted by said board to the council of such city, and approved by them by ordinance before the same shall take effect."

Burns Annotated Statutes of Indiana, Sec. 3830.

The same provision of law is made for cities of more than 50,000 and less than 100,000 population.

Burns, 3963.

The same provision of law is made for cities of 43,000 to 49,000 population.

Burns, 4117.

The same provision is made for cities of 36,500 to 43,000.

Burns, 4190, v. 2.

The same as to cities of 30,000 to 36,500.

Burns, 4190, n. 8.

In addition to these powers above set out each of said clauses of cities has a right "To regulate, license and tax street car, telegraph and telephone companies."

Burns, 4077.

In all cities having a population less than 30,000 the law gives them the right "To regulate and control the kind and location of poles used by telegraph, telephone, electric light and street railway companies within the corporate limits of any such city."

Burns, 3541, a Third Division.

All cities, towns and counties have a statutory right to levy and collect taxes from telephone companies. All townships have statutory right to levy taxes upon them, but counties collect taxes for the townships.

The above are what may be termed the statutory powers possessed by municipalities. In addition to them municipalities have many inherent powers not enumerated in the statutes. Upon this point the Supreme Court of the state has said:

"By the enumeration in a statute of powers which would belong to a municipal corporation without specific enumeration, the statute containing such enumerated powers is not to be regarded as the source of power, but as merely declaratory of a pre-existing power, or rather, of a power which is inherent in the very nature of a municipal corporation, and which is essential to enable it to accomplish the end for which it is created. And the enumeration of powers, including a portion of those usually implied, does not necessarily operate as a limitation of corporate powers, excluding those not enumerated."

City of Crawfordsville vs. Braden, 130 Ind. 149.

To these inherent powers we will have to look to see what restrictions may be placed by incorporated towns. One of these powers which is of necessity inherent is that of control of its streets and alleys and as a telephone line cannot be constructed in a town without crossing streets and alleys it follows that before its construction, consent to so construct must be obtained from the proper authority, which in our state is the Board of Trustees. Unless this consent is obtained any company that would erect or try to erect a telephone line in or through any incorporated town in Indiana would be a tresspasser and liable to an action for tresspass or to an injunction proceeding. This consent must now be obtained by and through an ordinance, which ordinance can not go into effect for thirty days after its passage, nor until voted upon at the polls, if within the said thirty days a referendum is demanded by forty per cent of the legal voters of such incorporated town as shown by the last preceding elections. In the event the referendum is demanded it is the duty of the Board of Trustees to cause said ordinance to be submitted to the voters of said town at the next regular election therein if petitioned for by fifty per cent of the voters. It requires a majority of the votes cast at said election to cause the ordinance to go into effect.

In cities of less than thirty thousand inhabitants and in incorporated towns it is especially necessary to look carefully to the ordinance or contract entered into, and if a company succeeds in getting a favorable franchise, erects its line according to contract there is little to fear from the restrictions that may be placed by such city or town upon the company thereafter. As cities of that size and towns have no right to fix taxes nor tax phones; while in cities of 30,000 and over the company is liable to have the municipal authorities placing restrictions on its business along this line continually.

This can be guarded against almost entirely by the contract entered into with the proper city authority at the inception of the contract, but care must be taken therein to limit the power of the city to alter the prices to be charged patrons, and to limit its powers to levy a license tax upon phones.

Municipalities, such as cities and towns, must necessarily have almost unlimited power over the streets, alleys and sidewalks therein, and in making a contract with a telephone company and granting its franchise the munici-

Digitized by Google

pality has the power to treat with the company just as any other parties may contract. The matters usually considered in this contract are:

1. The time to begin the work.
2. The manner in which the work shall be done.
 (a) Kind, height and location of poles.
 (b) The height at which the wires are to be placed, etc.
3. The time for the contract to terminate which can not exceed fifty years for the reason that the State of Indiana does not grant charters for a longer period than fifty years to telephone companies.

Mr. Wasson made a motion that a question box be a feature at the next meeting, as a great many members desired information on various subjects. Motion carried.

Mr. Hutchinson: Mr. Chairman, it seems to me that one of the most vital questions that this convention and the states of which it is composed, and a question that we have to deal with in the next few years, is the question of joint traffic rates between the connecting companies, and it seems to me that the sooner we get a uniform rate established, the better it is going to be for us, and as preliminary to that I would move that a committee of five be appointed by the chair at this time to report some uniform schedule which we can adopt to-morrow morning, and that the same be recommended to the several state associations for their adoption. Carried.

Mr. Robinson of Ohio, Mr. Purcell of Iowa, Mr. Rex of Indiana, Mr. Layne of Missouri and Mr. Hutchinson of Ohio were appointed on the committee.

The convention then adjourned and members and visitors visited the underground conduit at the invitation of the Automatic Electric Company.

THIRD SESSION, THURSDAY, 9 A. M.

Convention called to order by chairman.

Mr. Layne, chairman of committee appointed on St. Louis World's Fair resolution, made the report of the committee, which recommended that the constitution be so amended as to time of meeting that the convention may meet for 1904 at the St. Louis fair during the month of November. Report and resolution adopted.

The auditing committee, composed of Frazee, Valentine and Dobie, made its report, which showed cash on hand at last convention $128; received from membership, $160; received from membership at this convention, $370, making a total of $658—a cash balance of $290.42 on hand.

After a few remarks by Mr. Hall of Missouri, President Raney requested Mr. Rex to take the chair.

Next on the program was a paper read by Mr. Hutchinson, entitled

SETTLEMENT OF TOLL BUSINESS BETWEEN CONNECTING COMPANIES.

The ultimate success of any enterprise depends upon the ability of its management to do business at profitable prices and to collect the full compensation when earned.

In these times when competition is so keen that large business concerns must look after the smallest details of their expense accounts that the profit and loss account does not show a balance on the wrong side of the ledger at the close of the year, how much more necessary it is for a telephone company, whose gross earnings are made up of a great many exceedingly small sums, to be absolutely sure that every penny earned by it is charged to the proper source and duly collected.

A single telephone company doing business over its own wires exclusively can check its own business and know that every station is collecting and accounting for all services rendered. But with the independent telephone companies fairly swarming over the country which have more or less joint business with each other, their business transactions become as complex as business transactions between individuals and we have a problem which calls for the simplest solution possible.

The transactions of business connecting telephone companies is without a parallel. Railway systems have joint traffic arrangements, but when a car or a train of one company passes to the tracks of another, it only occupies as much of the connecting company's tracks as the rails required to stand upon, or the block in which it is running. Telegraph systems may have joint traffic arrangements, but the messages are transmitted in relays and only the wires of a single company are in use at a time. But when you step into a telephone office at A to tell your wife at B that you won't be home for a week, you are monopolizing one complete circuit from A to B to the exclusion of every other person who wishes to use any portion of that circuit at the same time.

Therefore a system for taking care of the business in connecting telephone companies is demanded which will fill the following requirements:

The system must have a uniform method of ascertaining the rate between any two points which should be based upon the air line distance between those two points, whether the message passes over wires running upon the air line route or in the most roundabout way, and whether the wires necessary to complete a circuit between the two points belong to

Digitized by Google

two companies or a dozen companies.

And there must be a uniform system of dividing the fees received among the connecting companies.

To illustrate: You are in Madison, Wis., and you wish to communicate with Sweet Home. The operator knows only her own sweet home, but you tell her that Sweet Home is in the northwest corner of Hoosierdom, and she turns to a map, lays down a ruler and instantly tells you that you can talk five minutes for $1.20. You are in a rush, as your train leaves Madison in 15 minutes. The operator therefore calls for Sweet Home, Indiana, and in a short time you are talking with your wife. To make that connection, we will say, wires of six different companies have been brought into use, and you are monopolizing them all for the time being. There is no traffic arrangement between the company at Madison, Wis., and the company at Sweet Home, Ind., nor with any of the four intervening connecting companies which we would designate as A, B, C and D and yet each and everyone of those companies must be ready to furnish the use of their wires without stopping to ask how they will get paid for their services, else valuable time will be lost, and you would have to leave for your train without talking, while the companies would be out $1.20. Hence there must be a system which each company shall share in that $1.20 and that each company will know that its share is looked after without any special effort of its own other than making a record of the message.

It is not the province of this paper to say what the basis of the division of fees should be nor what should be the schedule for determining the air line rates for joint messages, but to urge the necessity for a uniform system that should be recognized by every independent telephone company in the United States. In the illustration the operator at Madison makes a record of your message and at the end of the month reports it and transmits the $1.20 to the proper officers of her company.

The Madison company thus far is $1.20 ahead. The operator at Sweet Home also makes a record of your message and at the end of the month sends it to the proper officer of her company, which we will say has its headquarters at South Bend. The two terminal companies thus have records of the message but of the four intervening companies two checked the message, and the other two in the rush of business made no record of it. We will say that the operators at A and B kept a record of the message but C and D let it pass unrecorded. Now without a system for handling joint business C and D would not only have a record of the business, would have no information that they had a claim against any company, in fact would not be apprised that they had performed any services for you.

It follows then that there must be a central office to which the operator at Madison must send a record of your message. It also follows that the operator at Sweet Home should send a message to some central office and it also follows that it is best for each intervening company to have at least one of its operators check and report the message to some central office.

There should be at least one central office in each state. For the present illustration we will assume that there is one such central office in each Wisconsin, Illinois and Indiana. Now, as your message originated in Wisconsin, the record should be transmitted to the central office in Wisconsin. To enable the central office in Wisconsin to know that the record as received from the Madison company is correct, it should receive a report from the operator at Sweet Home as well as checking slips from the intervening companies. The central office is then enabled to apportion the $1.20 for your message among the six companies, and if any one of the six companies has neglected to report it, or even if all the intervening companies have neglected to report it, their shares of the $1.20 are determined and credited to their respective accounts.

Now we will suppose that a commercial tourist at South Bend wishes to talk with a customer at Madison. The terminal companies are the same, the joint rate is the same, and the connecting stations are the same. The South Bend operator then reports that message to the Indiana central office, as does the Madison company and eacn of the intervening companies.

At the close of the month each central office sends a statement of the joint business to each connecting company as made up from reports received by it. Thus, we will say, the Madison company received the Wisconsin report, showing that it owes the South Bend company 25 cents, A 10 cents, B 15 cents, C 21 cents and D 14 cents. It also receives a report from the Indiana central office showing that it has a credit of 20 cents for the message sent from South Bend, so the Madison company transmits 5 cents to the South Bend Company and their account is settled. Both the Madison and South Bend companies then transmit the proper amounts to the connecting companies and the transaction is closed.

There may be a thousand and one combinations which enter into the work of the central company in ascertaining the balances at the end of the month, but they are all worked out in the same way. Of course among companies of a single state the system is not as complex, so I have chosen an illustration involving three states. This method enables every company to have its business carefully checked and to know if some of its operators are negligent there are others who are watching its business and looking after its interests as carefully as though an officer of the company.

Now what should this central office be, what duties should it perform and what should be its responsibilities? In answering these questions I shall make use of my own personal experience, for, no matter how nice the theory may appear when reduced to plain reading, its utility depends entirely upon actual results obtained by putting the theory into practice.

Digitized by Google

The central office should be a clearing office in the true sense of the name. All joint messages should be reported to it. The original record slip should be compared with the receiving record slip, and if more than two companies are involved, the checking slip should be made use of where the terminal records do not agree. All stations should report to the clearing office at least four times a month, as the earlier an error is detected, the easier it is corrected, and all errors should be corrected and the station in error notified of the correction at once.

The clearing office must open an account for every station with every other station to which a message has been transmitted. At the end of the month the separate station accounts must be brought together, and all companies having joint business with each other must be included in a single statement. The balances between the several companies in a single statement must then be brought together and the clearing office must designate what accounts are payable, and to whom payable, to balance the accounts of all companies included in that statement.

E. H. MOULTON OF MINNEAPOLIS, MINN.
Member of Executive Board Interstate Independent Telephone Association.

While to those unfamiliar with the system of the State Telephone Clearing Company of Wisconsin, all this work would seem to be a complex and laborious task, yet several months' experience with the system of that company has demonstrated that it is simple, it is absolutely correct, and it is so flexible that it may be adapted to the conditions of any schedule or traffic arrangements between connecting companies.

I recall one statement for October which showed a total of 738 messages with a total revenue of $128 divided among eighteen companies. Twelve drafts amounting to $13.89 paid by six of the eighteen companies to the other twelve companies settled the entire business for the month. The cost was one cent per message to each company sharing in the fee of any message, and if each company had attempted to check and settle its own business with each of the oher seventeen companies, it would have required reports from each of the other seventeen companies, it would have been obliged to report to each of the other seventeen companies and it would have been obliged to make a monthly balance sheet for each of the other seventeen companies. In fact each company would have to do the same work, and be to the same expense for the settling of its own business as the clearing company for the entire eighteen companies.

The clearing company should be a company distinct in itself and it should not be a mutual affair. I know it is claimed by many that the clearing office should be an office in which all companies should have an interest, but while this might be satisfactory, yet like the mutual telephone company which starts out to do business by compelling every subscriber to be a stockholder, it soon finds it advantageous to take in subscribers who are not stockholders, and as the clearing company is not a company which demands the investment of any considerable capital, and as its duties are to serve all alike, it should be as distinct from the operating company as is the foctary which manufactures the instruments. Its business is a business distinct in itelf.

The nature of its business is such that the responsibilities are confined to correcting the errors of operating companies, and in apportioning the fees and making correct reports of the same. As each operating company gets an itemized statement of the business done by every station on its lines with every other station on the lines of every other company, and such statements must balance to a cent, each company is informed of the correct balances due it or owing by it, and the company which fails or refuses to pay the balances is a responsible company and liable for monies had and received.

The clearing company should handle no funds but it should draw drafts against debtor companies for such amounts and payable to such companies as shown by its statement to be due, and such drafts should be honored and paid by the company against which same are made.

The time has gone by when companies can operate successfully by allowing each company to retain what it collects as its share of all joint toll business. Such methods were practicable and apparently fair when not more than two or three companies were concerned, but with the construction of connecting links, which makes a vast network of wires owned by hundreds of companies the clearing company becomes a company of necessity. The State Telephone Clearing Company of Wisconsin has solved the problem and its system is absolutely simple, perfect and reliable.

Should any person wish to confer with me

Digitized by Google

in regard to the system, I shall be pleased to have such conference either in person or by mail.

Mr. Hutchinson: Mr. President, at the afternoon session yesterday I moved that a committee of five be appointed on toll rates to report this morning. I was named as chairman of this committee. I have been unable to get the committee together, but have drafted this resolution and move its adoption:

Resolved, That the executive committee of the Interstate Independent Telephone Association, acting in conjunction with the secretary thereof, arrange a schedule of toll rates for connecting companies and basis for division of fees, and submit the same to the several state and district associations within the Interstate territory with a request that the same be adopted and put in force by the members of such state and district associations, and, be it further

Resolved, that in the absence of such adoption of such rates, and in the absence of any express tariff agreement between connecting companies, that the fees to be charged and basis for division thereof shall be based upon the schedule and basis recommended by the executive committee of the association; and, be it further

Resolved, that all Independent companies operating within the Interstate territory be apprised of such schedule and basis for division of fees as soon as the same has been determined by the executive committee of the association.

Resolution unanimously carried after some discussion.

Mr. H. E. Ralston not being present, his paper, entitled "Enforcement of Message Time Limit," was not read.

Colonel J. D. Powers, Louisville, Ky., then read a paper entitled

INDEPENDENT TELEPHONE SECURITIES AS AN INVESTMENT—FROM A BANKER'S STANDPOINT.

Securities of any kind to be a good investment must be secure. The highest quality in any investment should be its soundness as a permanent quantity with an inherent ability to sustain its quality. From the banker's standpoint the acceptable security is that which represents real value and possesses that quality which enables it to grow stronger as it grows older, with its foundations broadening and deepening as the pressure of time settles it, in its permanent abode. The weakest period of any security should be at its birth. Any weakening after it is launched shows a faulty foundation. Stocks and bonds are only representative in character, and if the source from which they spring is not sound, safe and well grounded, with a foundation sure and steadfast, all of the fine engraving, lithographing and tinting will not give them character, nor furnish them a market.

The first prerequisite of a bond or stock issue which shall carry conviction of safety and security with it, is character and intelligence in the personnel of the corporation. The true foundation of the corporation is found in the individual members thereof. They impress upon the artificial person the same character and standing that they enjoy as individuals. In the corporation as in the stream, it will be pure if its source is pure, and foul if its source is impure. I take it that there can be no special class of securities that are either wholly good or entirely bad, but there is no doubt whatever but that the general character of the business is some index to the desirability of the securities. At one period of our history, that general security which is now the most popular, ranked about like oil, and mining schemes do at the present time, but now we all appreciate that a dividend-paying railroad stock or an interest-paying railroad bond will buy money cheaper than anything else except government bonds. The difference is not so much in the thing as in its management and control. Railroads are now operated on scientific business principles and their fiscal affairs are not left to mere chance. We are living in a different commercial and financial era from that of thirty or forty years ago, when colossal fortunes were made in destroying railroad securities and wrecking railroads, bankrupting the original owners, whose money provided the means for enriching the wreckers. Now, happily, the man of all others, who is most in the public eye and he who is the great captain over the captains of industry in this country, has demonstrated, that reorganization of railroads and other great commercial and manufacturing industries can be successfully brought about, in a way to benefit all parties in interest, and at the same time increase the usefulness and earning power thereof. No man in history has made so much money for himself, and at the same time so much benefited those with whom and for whom he has traded. His money aside, Mr. Morgan is the foremost man of the age. His achievements have been so stupendous, so exactly in accord with his undertakings that the world stands amazed at the wonderful work of this most wonderful man. Yet he is the natural outgrowth and product of this marvelous country, illustrating merely its highest type of progressive citizenship. Why are the securities that are offered by him taken without question? Because there is character and skill behind them. The individuality of the real person is injected into the artificial person—the corporation.

All of the popular "rot" about soulless and characterless corporations has no more general application than when used as to doctors, lawyers, bankers or individuals, or of any par-

Digitized by Google

ticular trade, profession or calling. If men who control corporations are unscrupulous, then you may look out for fraud on the part of their creature.

But, you ask, how does all this generalization assist us to determine from the banker's standpoint the value and desirability of independent telephone securities as an investment. First, you must know that each banker determines from his own viewpoint what is desirable or good for his bank as an investment, and the diversity of opinion as to the desirability of a new and untried security is very great. The Independent Telephone movement was not primarily a well considered and fully digested financial venture, but rather the outcome of untoward conditions brought about by the arbitrary attitude of the Bell people toward the general public, thus making the original venture a sort of protest against inefficient service, high rates and general intolerance of the rights of the public, all of which was the outgrowth of the monopolistic policy inaugurated by the Boston syndicate who controlled the talking machines of the country. They preempted all creation and acted as though the country was theirs by right of discovery. Such tactics were pursued as to force the building of independent exchanges, and when five or six years ago the movement began to attract attention locally, the most vindictive, malicious and unreasonable war was inaugurated to break down and destroy any and all semblance of competition. The war waged was so fierce, the methods adopted so vicious, that the Independents, in order to sustain themselves, was absolutely forced to inaugurate the very best possible construction and install and maintain a system of the highest efficiency, which could be maintained at the minimum of expense, thus almost unconsciously laying the foundation for enlargement, as well as affording the basis for good, high class securities, based not only upon earnings, but equipment. This is the answer to the inquiry, Why have independent exchanges been so well constructed, so thoroughly equipped and so splendidly operated?

In estimating the value of the securities offered by the Independent Telephone companies, it is of the utmost importance to examine into the question of location, surroundings, population, outside connections and inside influences and management. Necessarily the Independent movement has been localized. A critical examination will show that nearly all the Independent exchanges of the country are under the control and under the management of home people. These people have ventured their time and money in an enterprise that protects their neighbors, as well as themselves, from the extortionate charges that they were forced to pay the monopoly, and the public understands that if it should withdraw its generous support from the Independent and cause them to fail, the loss would come much nearer home in the restoration of the old "talking tariff."

So you may rest assured that the Independent telephone is a fixture. It has come to stay and the conditions behind its securities are permanent. The main question then is, Have they the necessary earning power to promptly meet their interest and put aside enough into the sinking fund to pay their bonds at maturity? In dealing with this general question it is of the utmost importance that we reckon not from the profits of a single month, nor yet of a single year, but take the gross earnings of a given number of subscribers for a given period of time as against the expense and fixed charges, including interest on the bonds and the payments to the sinking fund, and see what the result will be. If you do not find that there is sufficient earning power to cover your entire charges, then you charge too little, or you capitalize too high. The best exchange in the world will be an utter failure if you do not receive adequate compensation for the service rendered, and its securities will not be good. Telephone securities are good and desirable as an investment only when the conditions behind them are of a character to indicate permanence, stability, strength and earning power equal to and greater than the immediate necessities of the company.

All exchanges cannot be measured by the same standard. For instance, one inexperienced in such matters would naturally enough say that if you have built an exchange in one locality having a capacity of 500 telephones, at a cost of $50,000, you certainly can build one with a capacity of 5,000 telephones at a cost not exceeding $500,000, yet experience has demonstrated that the cost per instrument in the larger exchanges is more than double that of the smaller, so almost necessarily you must judge of each particular exchange to determine when the capitalization is reasonable and its securities safe and desirable as an investment.

The rentals received for service being the only source of income from the business, they must be adequate, or an ability to pay current expenses, keep up repairs and pay interest and dividends will quickly manifest itself. First of all the construction should be absolutely up to date, A-1 and first-class in every particular. Second, the cost of material and construction should be kept within due bounds and not left to chance but figured out to a cent. Make your plans full and complete and work up to them to the letter. Third, do not be lured into over-capitalization, remember you must pay interest on each bond issued and should pay dividends on your stock. Fourth, beware of wind and water. Too much wind injected into your enterprise is likely to produce a superfluity of water. Blow out the wind, wring out the water, and get down to solids and stay there. When you issue bonds, do so against values, against earnings, and be sure that there is enough back of them to furnish a solid basis of credit. Hold in the treasury enough securities to provide for betterments and extensions properly and duly safeguarded from imaginary wants, only to be issued against actual values. Fifth, avoid the mistake of supposing that you can successfully operate an exchange at a greatly reduced rate of rentals. Good service should always command reasonable compensation. Do not seek to reduce rates, but strive to improve the service to the

Digitized by Google

end that Independent securities may be placed on a permanent and stable basis.

It does not follow that because your neighbor can sell his wares at a given price and make money thereby, that you can sell for a less price and make a living. You had better install a hundred phones on a paying basis than put in three hundred at a rate that nets you a loss.

If this convention should accomplish but one single thing and that thing was to effect a general increase of Independent telephone rates throughout the country, it would do more to give Independent securities a permanent and stable basis and sure remunerative market than all the past conventions have accomplished.

Because some over-confident, not to say unwise, people have permitted themselves to be deluded by hot air prophets into running an exchange on grossly inadequate and ruinous rates it does not follow that the great majority of Independents have been so foolish. The history of all the large exchanges shows that not only are they abundantly able to take care of their expenses, fixed charges and interest, but will very soon, if they have not already done so, pay safe and satisfactory dividends on their stock. But owing to the wonderful advertising facilities enjoyed by the Independents at the expense of the Bell corporation, if a poor measly little exchange down at Podunk with its thirty-seven subscribers slips its credit trolley and comes to a standstill, immediately the civilized world is advised to stand from under, as the whole Independent fabric is topling to ruin, the only consolation being that "they never did amount to anything nohow."

I venture the prediction that out of the 4,000 Independent exchanges, with an investment of over $150,000,000, serving more than a million subscribers, not 1 per cent thereof will ever default on the interest or principal of their bonds, even at the present rates charged for service.

Many of the smaller exchanges which have been struggling under a heavy load will be pulled into comfortable shape by the Independent long distance lines which are now reaching out from all the larger exchanges and coupling up the little fellows, so that ultimately they will be brought into the fold and after awhile become part of a great consolidated interest.

If I were called upon to express an opinion or give advice as to the most important thing to be done by an Independent company to insure its success, and make marketable its securities, I should say, Attend to your own business and let the party in opposition have a monopoly of the brag and bluster, knowing that a fair-minded and discriminating public will protect itself by giving you the lion's share of the business. You cannot get it all, and I doubt seriously if it would be to your advantage to have it all, because human nature is pretty much the same the world over, and once you had it all, the chances are you would not behave much better than the old company has. But the investor with his ever ready question is abroad, and in this inquiry he is to be reckoned with. First, he is solicitous to know how it is possible to maintain two telephone exchanges in a single town on a paying basis? The history and experience of every town having two exchanges in which a first-class Independent exchange has been inaugurated has demonstrated that the increased number of phones in use is equal to or greater than the number in service when there was only one exchange. As an illustration, take the telegraph companies in nearly every town in the country, the Postal and Western Union compete for the business. The Western Union occupied the field first, and there were few people who did not believe that it would be impossible for the Postal to sustain itself, yet we all know that the increased business, at the reduced rates enables each company to protect its bonds and pay its stockholders, and the future will see the history of the telegraph repeated in the telephone.

Yet again the inquirier says, Suppose you are on a paying basis at present, what assurance has the investor in your securities that you will be enabled to maintain the rate and retain your subscribers, so as to give you a definite and fixed income, with which to meet your obligations?

Let the incontrovertible facts answer the question.

First: It is conceded on all hands and has been fully demonstrated by the test of time that the telephone is no longer in the category of luxuries, but is a household and business necessity. You can no more get along without it in your business than you could dispense with the telegraph or mail; as a means of economy it pays its hire many times over each month, and as an aid to business it is indispensable.

Second: The wonderful and continuous increase in the number of phones in service is proof positive that the growth of the exchange is natural, permanent and certain; insuring continued and increasing patronage.

But, says the inquirier, your facts can apply as readily to the Bell as to the Independent, and it is the Independent securities that we are concerned about. Please answer definitely.

Again let the undisputed statistical facts make answer.

The Bell telephone begun its business career a quarter of a century ago, without competition, let or hinderance, backed by countless millions, under a management shrewd, energetic and skillful; protected by letters patent and the most astute lawyers that money could employ, and after a wonderful career in an unobstructed field the entire number of Bell telephones in use to-day is only a little more than 1,000,000, whilst the number of Independent instruments in service is in excess of 2,000,000, a most marvelous record, when you consider that the age of the oldest Independent exchange in the country is less than eight years.

With these facts staring him in the face can any reasonable man, banker though he be, doubt that with proper construction, reasonable rates, good service, and conservative man-

Digitized by Google

agement, Independent telephone securities as an investment are not only safe but desirable.

On the motion of Dr. H. S. Herr it was decided to print the paper in pamphlet form. A rising vote of thanks was given to Colonel Powers for his able paper.

Mr. J. H. Layne was next on the program and read a paper entitled

FROM A SMALL INVESTOR'S STANDPOINT.

To the President and Gentlemen of the Interstate Independent Telephone Association:

In the brief period of the past six years' history of our country, we have reason to be filled with exultant pride for the brilliant achievements won by the marvelous growth of the Independent telephone system; also its expansion abroad throughout the civilized world, against the most relentless monopoly—the American Bell Telephone Co.

We also rejoice with the nation, that within this brief period of our magnificent progress in expansion and increase of trade, of our commercial and other industrial enterprises. Our enormous exports and balance of trade in our favor, has greatly aided and revolutionized our financial conditions existing at this time. We also should feel exultant over having gained supremacy over the old world, in forging our commercial and industrial enterprises to the front ranks of all nations. It has also been conceded we have attained supremacy in the rapid accumulation of wealth, and we now feel we are masters of the situation for the solution and control of such financial conditions in maintaining our supremacy for all future time. The financiers and rulers of the old world look on our marvelous growth of trade and the accumulation of wealth with manifest jealousy and alarm. The recent aggressive inroads by our Morgan and Yerkes in capturing with American capital some of their most profitable industries on their own soil is but characteristic of our young financiers' laudable ambition.

Such indomitable energy as manifestd by these financial giants will in due time conquer the slothful Goliaths of the old world. The genius of inventions and the applied methods of tne adaptability of their various uses for the purposes to be accomplished is the true secret of our success. Within a period less than half the time we have here mentioned, for a retrospective view of our great progress made in telephone and other industrial enterprises, we have come to realize we are no longer compelled, as in former years, to seek investors for sale of bonds and stock of our varied enterprises in European countries. Conditions have so changed that local or home capital can now be found and obtained almost everywhere on our own continent in amounts sufficient for all legitimate uses.

Also never before in the history of the speaker has the circulating medium of our money been so generously distributed. Now in portions of our own country money sufficient is available for all local demands. For many years prior to the past three years, money was concentrated and hoarded in our eastern cities, and not available for the many local enterprises of the middle and western states, except negotiations were made through eastern capitalists.

This is a most fortunate condition to have the money more equally distributed, whereby the local investor having a better knowledge of the real merits of the investment seeking capital can meet local demands.

It has also been long known by many that the capitalists of the more remote cities of the east have not only been timid of Independent telephone securities, by reason of being unable to comprehend the rapid growth and development of the telephone system of our middle and western states. Our progress has been much retarded for want of more capital for the betterment, and meet the increased demand for telephone service; hence the importance of better knowledge of telephone securities, and where to place them. Rate of interest was never so low and all industrial securities in shape of bonds and stocks are sought after with the single exception of the Independent telephone securities.

Why this discrimination by the investors, in the face of our present financial prosperity as shown in the preliminary facts, is now the paramount question for our consideration at this time. I will venture the assertion, fully three-fourths of all the Independent telephone companies would like a solution of this question whereby they might receive just and equitable consideration for their securities, as other inuustrial enterprises receive for theirs.

We have by our untiring energy won one of the essential points to be desired by the capitalists, that of stability and permanency of maintaining our holdings, both in patronage and manifest loyalty of the public, moreover we establish our exchanges. No other industry coming into existence for so short a period can show so large a percentage of increase or a larger dividend or profit for the capital invested as that which can be shown from the books of the Independent telephone companies. Even after due allowance has been made for deterioration, still but few other enterprises will show better results. Again, no other industry has greater prospective growth of expansion, by reason of the fact that it is universally acknowledged that a telephone is an indispensable necessity in every business as well as the household.

No longer the threatened "crushing out of the Independent telephone companies" by the old monopoly, which so long held the field, menaces the safety of our systems, so long as good service is maintained.

The Independent telephone companies by their indomitable energy and courage, sprang into the competitive field in such numbers that the "monster crusher" from shear exhaustion of the long continued fight (using the common parlance of modern slang), "has gone away back and sat down."

Also the Independent telephone companies, and others holding their securities, entertain now no doubt or fear of being "crushed out"

Digitized by Google

or of their ability to maintain our holdings, and the loyal support of the people.

From my own experience as well as information derived from other sources, the easiest way of floating telephone securities is to enlist the aid of the local capitalists, using the same energy you have displayed in building up your business. Formulate your prospectus, both present and prospective financial conditions and you will be surprised at the favorable results.

My first attempt in floating telephone securities was a little more than three years ago. My prospectus was carefully prepared, showing 18 per cent income on the capital invested, and from this showing I felt no trouble would be encountered to float the bonds. When presented to a large banking and trust company by a representative agent, the head of the firm in one of our large cities seemed incensed at the audacity of an Independent telephone company for asking such, and proceeded to lecture him thus: "I own stock in the American Bell Telephone Company, and it will not be three years until all your Independent telephone companies will be crushed out by the Bell Telephone Company, and there will be nothing left of you."

After getting this message, I looked up the quotation of the Bell Telephone Company's stock, as then rated in the stock market, and now remember it was quoted at $3.54, more than three times its face value. But a short time ago I saw the same quoted at $1.52 (less than one-half depreciation in a period of about three years), while my company's stock was absolutely worth $3.00 for each $1.00 of the stock for which Mr. Banker refused to invest; and instead of his prophecy of being wiped out by the Bell Telephone Company I have lived to see my company expand from 220 subscribers to 2,250, in less than three and one-half years under the one system and management as an Independent company.

In conclusion I would say to the capitalisits seeking investment, no surer or larger paying dividends of any industrials can be more than that in Independent telephone securities, and especially small plants which pay from 15 to 30 per cent on the cost of construction.

My advice to those seeking aid or capital to build up your Independent exchange, local capital is much easier secured than seeking to float bonds or stock in distant cities, unacquainted with the environments favorable for the upbuilding of an exchange and its marvelous growth.

The time has come when we should jusly demand of the capitalists and financiers a favorable recognition of our securities. This claim of recognition is justly due, by reason of the fact that we can show the greatest growth of increase in development of any other one industrial enterprise within the same time. Again, we justly claim in our magnificent achievement that of bringing within the reach of the masses, by greatly reducing the cost, that which all now concede to be an indispensable necessity.

For this one achievement we are entitled to the gratitude of not only our nation, but by our demonstration of this fact, the gratitude of the whole world.

A vote of thanks was tendered Mr. Layne for his able paper.

Mr. J. J. Nate of Chicago then read the paper entitled "The Berliner Patent, Bell Claims of Infringement and Litigation Now Pending."

C. B. Dobie presented the following resolution:

Whereas, Many members of this association are unwittingly giving orders to the Western Electric Company for telephone supplies, and as it is a well known fact that this is a part of the Bell company, I move that it is the sense of this association that these supplies should be purchased from the supply houses supporting them and not from the Western Electric Company.

Mr. Young: I do not exactly understand that resolution. The Western Electric Company manufactures general supplies and also telephones. They offer to sell us their supplies, but will not sell us their telephones, and if I am not wrongly informed the Bell company is in possession of perhaps over 50 per cent of their stock. We are simply feeding them to the detriment of the houses to furnish us supplies. We are feeding the Bell company through another channel, which is ufair, and is not the kind of support we should give to each other. We must look to the Independent supply houses for some support, although we spend our money and get all they have got in return and I do not think that we should in any way support a company which is a part of the Bell company.

By reason of the late hour Mr. Hull asked and was granted leave to withhold his paper, entitled

METHODS FOR IMPROVING LONG DISTANCE TELEPHONY.

Mr. Chairman and Gentlemen of the Convention:

Improvement is the slogan of this age. Especially is this true of telephony. The time was when almost any kind of an instrument or line would suit the otherwise progressive citizen Any sort of communication by spoken words was progress and the poorest and often interrupted service was readily forgiven. Rapid strides are being made in improvement of instruments and the public is fully aware of it. We can but expect that they demand better if not perfect service. There are many reasons why Independent telephone service, ever improving, has not reached the highest standard

Digitized by Google

of excellence. Nine-tenths in point of number of the Independent telephone exchanges have been built with the primary object of supplying local service and without any thought on the part of the promoters of any necessity arising whereby they would be called upon to extend their lines or procure for their subscribers and customers any communication beyond that afforded by their limited faculties. At the beginning of this enterprise the community served and the company furnishing the service were agreed and a unit as to the objects and uses of a local telephone exchange. But soon the people of a neighboring town or perhaps county seat, in their casual business with their fellows, perceive the advantages gained by their friends or perhaps rivals, across the prairie and forthwith over night, plans were laid for the construction and operation of the Blankville Independent Telephone Exchange. Soon it was discovered that, although striving to outdo each other, both commercially and socially, these adjacent communities must have opportunity to reach each other quickly. According to the advertisements in some public places that we may read while we impatiently wait for the answer to our call. The mail is quick, the telegraph is quicker, but the telephone is quickest. For this reason a connecting telephone line is proposed. It is hurriedly built. I say hurriedly, for the reason that additional facilities for communication between existing plants invariably brings a host of clamoring people who want their telephones installed instantly. Once the telephone habit has taken hold of a community there is no way to check it except by bad equipment, poor service, and gross inattention to the wants of the people.

Emulating the example of the prosperous farmer in his endeavor to buy all the land that joins him, managers and patrons join in the effort to reach surrounding communities. The undertaking is laudable and popular. Lines are built that answer for the time and the interested communities are happy and contented. The work goes merrily on. The circle ever widens and all goes well until its outward boundaries touch and overlap a similar telephone system.

The two systems are joined at perhaps some out of the way place without any thought of the consequences and an announcement is made that each system is ready for "through" business with the other. Satisfied subscribers vanish. There seem to be no call for the service now asked for prior to this time. But now that it is within reach it must be furnished. Any up-to-date manager can read the handwriting on the wall. He must not be weighed in the scales and found wanting. It is useless for him to explain that the fault is at the other end of the line. Whatever it is, it must be remedied. It matters not if the remedy involves the expenditure of more than his plant can comfortably afford, it must be done. The high sounding title and the far reaching import of the subject under such a title are calculated to mislead. The manifest inadequacy of sufficient suitable means of telephonic communication between independent exchanges within our association prompted the subject. The primary object of the suggestions offered will be looking more to the ways and means of securing the needed better "local" long distant communication rather than purely "long distance" telephony. There is but one solution to the latter problem. One company or a system of connecting companies must furnish such service to the independent field. Until the Independent movement obtains sufficient foothold in the larger commercial center provision must be made more or less local in its nature, for carrying "local" long distance messages and especially such cases as I mentioned at the outset. For instance, in my own state of Illinois, there is hardly a line out of the chain of Independent exchanges from Egypt to the Wisconsin line or from the banks of the Wabash to the Mississippi. We can each of us hold communication with our neighbor on either hand, and perhaps with our neighbor's neighbors, but beyond that we must resort to the unsatisfactory practice of repeating the message. What shall be done? My many letters of inquiry directed to many exchange managers brought no satisfactory solution or answer. Strong companies are occupying the larger inland cities of the states. How are the smaller inland cities and towns to reach them satisfactorily? The composite ideas to my inquiries seem to be embraced in the following three propositions, namely:

First—That the present system of lines connecting individual exchanges be continued and improved.

Second—That companies be formed along a given route to build metallic standard construction lines to operate in conjunction with the already established exchanges. The stock in the company to be subscribed by connecting systems.

Third—That encouragement be given to the formation of entirely independent long distance companies who will connect on favorable terms with individual exchanges.

I present these three ideas to the convention for discussion. The general sentiment seems to be that whichever of these ideas seems to be best or a combination of the three, will be readily adopted by all concerned, other than building standard construction. The most practical suggestion for improving present conditions is that new lines be run under present conditions on the same poles as now with no telephones on and that these lines terminate in open jacks on the respective switchboards of the different companies or stations. All calling should be done over present lines. When a so-called through message is to pass several switchboards operators are to be notified to connect the new line by means of these open jacks. This would be at best a makeshift but certainly would be a vast improvement on present conditions.

The second plan presents some complications which will be hard to overcome. The theory is a good one. It seems to me that practice will demonstrate that it will be a difficult matter to adjust the different ideas and conditions which will be brought into such an organization. It would seem strange if any two stockholders in

Digitized by Google

such a company would come under similar circumstances. It is not my province to discuss these matters but I hope they will be brought out in the discussion which follows.

The practical system for the advancement of the Independent telephone movement, it seems to me, would be a combination of the three ideas above suggested.

There is a great deal of purely local telephoning that is offered subscribers so cheaply that no long distance company could undertake it. Under this head comes free county service. Lines of the long distance company could be run to the main office of such a company with the understanding that all incoming lines from other stations be of standard construction. Better still, the long distance lines should touch each exchange. Through business should be given the long distance company direct and local business remain with home companies.

Conflicting interests are so diversified and individual wants so varied that the best thought of the best men among us will be necessary to bring order out of chaos. The betterment of existing facilities for the transmissions of messages will not accomplish all of the results desired. We must adopt some definite plan of action and have better facilities for the settlement of our accounts and (I am sorry to relate) our differences, together with a board whose business it is to adjust all these things. These last mentioned matters of course do not concern the general public, but they are of vital interest to us. We should be the people who are endeavoring to lead the movement into a sound business policy. By so doing, we will gain the confidence of the financial world and thereby be enabled to make all the necessary improvements to our plants so that we can give to the public the best service known in the science of telephony.

L. A. FRAZEE OF CONNERSVILLE, IND.
Vice President Interstate Independent Telephone Association.

Resolutions were then passed to the manufacturers and supply dealers for their generous entertainment, to the Illinois Telephone and Telegraph Company, to the secretary and other officers and to the representatives of the St. Louis Exposition for their cordial invitation.

R. B. Watrous of Milwaukee extended a cordial invitation for the association to hold their convention in Milwaukee in 1903.

The meeting place was left in the hands of the officers and executive board.

A motion was made to reconsider the passing of the resolution about purchases of supplies from dealers selling to companies installed in opposition to existing Independent companies, but the motion was lost.

The nominating committee made its report, which was adopted:

President—C. E. Hull, Salem, Ill.

Vice President—L. A. Frazee, Connersville, Ind.

Secretary—E. M. Coleman, Louisville, Ky.

Treasurer—J. W. Layne, Carthage, Mo.

The delegates from the different states made the following selection to serve on the executive board:

Illinois—A. B. Conklin of Aurora.

Iowa—H. S. Herr of Ottumwa.

Indiana—O. Rex of North Manchester.

Ohio—W. Guy Jones of Columbus

Wisconsin—A. L. Hutchinson of Weyanwega.

Missouri—W. F. Hall of Clinton.

Michigan—J. B. Ware of Detroit.

Minnesota—E. H. Moulton of Minneapolis.

Kentucky—David Prewitt of Winchester.

Adjourned until 8 p. m.

THE BANQUET.

The number in attendance at the banquet on Thursday evening was estimated at 600, and was a grand success. The number of ladies present added wonderfully to the already beautiful sight the tables and decorations presented, and everybody was in their very best of humor

Digitized by Google

and good cheer. Pioneer James E. Keeyler of Chicago made the opening address and then turned the assemblage over to President H. C. Raney, who acted as toastmaster.

The following speakers were heard:

"Illinois," Chas. B. Cheadle, Joliet.

"A Better Feeling," Frank Jones, Chicago.

"Ohio," H. H. Robinson, Cleveland.

"Missouri," J. W. Layne, Carthage.

"Poles," Edw. A. Lindsley.

"Kentucky," Col. J. D. Powers, Louisville.

"The Ladies," Frank L. Perry, Chicago.

"Supply Houses," J. A. Bennett.

"The Out of Town Telephone Manufacturer, John McHugh, La Fayette, Ind.

"Early Reminiscences," J. J. Nate, Chicago.

Jas. Wolff, Harry McMeal, E. M. Coleman and Thomas R. Mercein were called on and responded.

And so endeth a good time.

AMONG THE EXHIBITORS.

The Electric Appliance Co. occupied room 612, a place where "good cheer" was held out to all visitors. A line of Eaco telephones, batteries, receivers and telephone parts were shown. Those in charge were S. A. Dinsmore, mgr. telephone dept.; J. A. Bennett, mgr. sales dept.; E. C. Brown, O. T. Kimmel, F. J. Cram, F. D. Phillips, S. A. Rall and W. A. Stacey.

The Electrose Mfg. Co. of New York displayed a complete line of Electrose products for electrical purposes. A greater portion of the exhibit was devoted to Telephone receivers, mouthpieces, crank handles, bushings, socket nipples, etc. Electrose is the only successful substitute for hard rubber, so says Mr. Jos. Steinberger, vice-president of the company, who was in charge of the display, with the help of the Chicago representative, Mr. H. E. Cobb, 1501 Monadnock.

The Stromberg - Carlson Telephone Mfg. Co. entertained in one of the parlor suites. Their exhibit consisted of an extension of the glad hand of good fellowship and an invitation to take a carriage to the company's factory, where an elaborate exhibition had been prepared. Those on the entertainment committee at the convention and factory consisted of Messrs. W. Bowen, E. C. Lewis, A. J. Rousseau, G. H. Pierce, H. B. Hewitt, F. L. Martin, Paul D. Meyers and J. J. Nate.

Warner Electric Co. of Muncie, Ind., manufacturer of the Warner Pole Changer and the Warner Switchboard Ringing Generator, displayed their apparatus in operation. T. W. Warner demonstrated the devices.

W. G. Nagel Electric Co. of Toledo, Ohio, represented by H. E. Adams, manager of sales department, exhibited a line of telephone supplies including "ready" pay out reels, "Nagel" pole houses, construction tools, duct rods and cable cars. There were few similar exhibits at the convention and the company profited thereby.

E. E. Naugle Tie Co., 135 Adams St., dealers in cedar poles, held forth in a parlor suite. General hospitality and advertising matter were distributed to delegates and visitors. Mr. A. T. Naugle, manager of the pole department, was present in behalf of the company and combined the pleasures of being a host with duties of being a salesman in a satisfactory manner.

The Holtzer-Cabot Electric Co. exhibited motor generators in operation, ringing machines, magneto bells, busy back attachments, hand generators, gas engine igniters and magnets of various kinds. Those representing the company were: C. W. Holtzer, president; E. R. Harding, western manager; F. R. Hodgson, J. Meinema and A. E. Klunder. Small magnets bearing the monogram "H. C." made attractive souvenirs.

The Mountain State Electrical Co. of Wheeling, W. Va., exhibited telephones, self winding clocks, cable terminals and the Selectaphone. The exhibit was in charge of F. B. Hall, president of the company, and A. F. Pool.

Raber & Watson, 293 Dearborn Street, dealers in cedar poles, operated the Raber and Watson Railway, probably the best method of demonstrating and advertising

Digitized by Google

the pole business yet devised. The exhibit occupied a portion of the south parlor.

The American Electric Telephone Company occupied a suite on the parlor floor, with a line of telephones, switchboards and telephone parts. The company confined itself to a display of stock goods and showed a great variety. A handy screw driver, lead pencils and small receivers made attractive souvenirs. The exhibit was in charge of P. C. Burns, president; J. G. Ihmsen, general manager; O. M. Leich, S. J. Bear, W. A. Hauptman, J. H. Reed, H. P. Clausen, R. E. Pickerell and W. T. Gradolph.

The Kellogg Switchboard & Supply Co. received in commodious quarters on the sixth floor. Delegates and friends were here entertained and cordially invited to take an automobile ride to the factory at Green and Congress streets, where a permanent exhibit had been installed. Those in charge at the hotel and factory were the following: Messrs. K. B. Miller, A. E. Barker, W. W. Dean, R. H. Manson, R. L. Ames, H. E. Krause, A. B. Kratz, W. J. Gunn and Mr. Ainsworth.

The American Steel and Wire company, represented by Messrs. H. K. Sheppard, Geo. Chandler and W. C. Bogue, extended hospitality and cigars to visitors. No exhibit of products was made by the company.

The Swedish-American Telephone company displayed cleverness and originality in an array of handsomely decorated magneto and central energy telephones, switch boards and telephone parts. The company's quarters were in the south parlor and were in charge of E. B. Overshiner, president and treasurer; C. H. Macklin, secretary and general manager; A. V. Overshiner, T. Lidberg, F. M. Ferguson and R. L. Scott. Carnations and miniature receivers were carried away by the visitors.

The Standard Pole & Tie company of New York occupied quarters on the sixth floor. Sections of poles and cross arms were exhibited. Fred L. Merritt, secretary and treasurer of the company, and W. E. Mitchell explained the advantages of Florida pine cross arms and Juniper poles. A neat souvenir, consisting of an octagonal penholder, a facsimile of the Standard octagonal pole, was distributed.

The Farr Telephone Construction Co. was in evidence on the parlor floor. The exhibit consisted of a regular line of telephones and parts, in addition to which was shown a 150,000-ohm generator for use with the company's special bridging telephone. Intercommunicating devices and a line of construction material and tools were also shown. President C. W. Farr, E. W. Hurst, general manager, and John E. Bowen, manager of catalogue department, were in charge.

The Sterling Electric company of Lafayette, Ind., occupied a suite of parlors on the sixth floor. A full line of telephone apparatus, switchboards and protective devices were shown. A special feature was the single relay lamp signal multiple switch board, and the Ideal Automatic Restoring Visual Magneto Boards, also new designs in extension bells and desk sets. Those representing the company were: President W. E. Doolittle, S. B. Fowler, electrical engineer; H. T. Doolittle, purchasing agent; H. A. Taylor, vice president and secretary; F. E. Rotchka, Evan Shelby, E. M. Johnson, G. W. Metcalf and Miss Ethel Henderson. Souvenir desk stands were distributed among the delegates and visitors.

The Western Telephone Manufacturing company, with a display of telephones, telephone parts, toll line switch boards and combination exchanges received merited attention. Those representing the company were: A. E. Ziehme, president; F. W. Pringle, J. E. Keelyn, H. S. Pringle, W. S. Peacock and Chas. Saunders. A neat coin purse proved an attractive souvenir.

The Chicago Pay Station company was represented by J. C. Finch, manager, and C. H. Morgenstein, manager sales department. In addition to a full line of pay station devices a time stamp, used in keeping track of "trouble complaints," and a self-winding clock were exhibited.

Frank B. Cook was in evidence with a display of his celebrated protectors and terminals, line fuses, test connectors, strong and sneak current arresters, cross connecting boards and main distributing frames.

The Gordon Battery Co., 439-445 144th street, New York city, Chicago office, 904,

Digitized by Google

350 Dearborn street, occupied a room on the sixth floor. The exhibit consisted of battery cells and material used in their construction. E. M. Deems, western manager, was in charge.

The Controller Company of America, headquarters 108½ North Eighth street, St. Louis, was represented by Geo. L. Moselle, installing superintendent. The company showed a complete line of pay station controllers.

The New Haven Novelty Machine company, manufacturers of the "Novelty Slidable Sleeves and Pot Heads," exhibited a full line of their improved devices for joining lead-covered cables. Messrs. H. Grant Thompson, president of the company, and Chas. Luke, superintendent, demonstrated the device to the visitors and delegates.

The F. Bissell company of Toledo, Ohio, exhibited telephone specialties, including cable distributing boards, manhole guards, conduit apparatus and other equipment used in exterior cable and wire work. Messrs. Fred Bissell, C. M. Hamilton, W. S. Bissell and M. S. Walker represented the company. A souvenir clip artistically gotten up was an attractive souvenir.

The Hoffman Cable Hanger, represented by Erwin Greer, was exhibited with the display of the Electric Appliance company. The hanger is known as the double grip, the absence of bolts making it easy in application.

The Maltby Lumber Co. of Bay City, Mich., was represented by I. A. Maltby and A. Maltby. Handsome photographs of the yards of the company adorned the walls of the sixth floor parlor used by them.

The Dearborn Electric company occupied a seventh-floor parlor, with an exhibit of telephone supplies and telephone parts. F. M. Ross was in charge. He is connected with the sales department and knew how to gladden the heart of the visitor and show the line advantageously.

The Wittenberg Cedar company of Wittenberg, Wis., dealers in Cedar poles, was represented by W. L. Arnold, manager of the company.

The Hipwell Manufacturing company of Allegheny City, Pa., was represented by Harry Hipwell of Allegheny and J. A. Russell, western manager, Chicago. A new transmitter and new self-restoring drop were featured. Unfortunately Mr. Russell was taken ill on Wednesday and was confined to his home Thursday.

The Standard Underground Cable Co. of New York entertained in a suite on the parlor floor. Samples of telephone cables, underground and aerial and rubber covered wire of all kinds were shown. A new plant has recently been completed at Perth Amboy, N. J., for drawing copper wire and rods. The exhibit was in charge of P. H. W. Smith, assistant general manager; J. R. Wiley, Chicago agent; E. J. Pietzcker, Chicago, and Arthur A. Anderson, salesman.

W. J. Barr, Cleveland, Ohio, manufacturer of transmitter arms, showed an elaborate line of his goods and did much in the way of putting the superior features of his improved device before the delegates and visitors.

The Miller Anchor Co. of Norwalk, Ohio, was represented by G. H. Miller, who exhibited a line of anchors and combination augers. He has recently entered the field and reports satisfactory progress, his goods meeting with general approval.

The Allen-Hussey Co., Chicago, exhibited a line of non-interfering interior telephones for hotels and private exchanges, as well as the Duplex Desk Telephone Bracket. Central energy hotel systems are featured in the company's products and Frank Heffron took pleasure in demonstrating the system.

The Guarantee Telephone and Equipment Co., 71 West Jackson boulevard, was represented by J. T. Ridgway. Second-hand telephones and the reconstruction of old instruments are the lines specialized by the company.

The American Electric Fuse company occupied a portion of the south parlor and displayed fuses and protective devices. F. G. Jones, president; J. A. Kennedy, manager, and C. A. Rolfe and G. W. Rodomer were in attendance.

The Automatic Electric company exhibited several automatic telephones. J. F. Crook and S. F. Harris explained the operation of the devices.

The Chicago Telephone Supply Co., Elkhart, Ind., was represented by G. A. Briggs, president; S. A. Duvall, engineer,

Digitized by Google

and L. G. Le Bourveau of the sales department. An exhibit of the famous 6-bar generator and the 1903 transmitter attracted attention. A line of switchboard and telephones were also shown.

The Central Telephone & Electric Co., St. Louis and Chicago, showed a complete line of switchboards and telephone supplies. J. S. Cuming, president; C. H. Wallis and H. Z. Joys represented the company. Neat souvenirs in the form of miniature receivers were given away.

The Nungesser Battery Co. of Cleveland, Ohio, manufacturers of both dry and wet batteries, exhibited a full line of their commodities. A feature was the No. 3 Nungesser Closed Circuit Battery for operating switchboards and central energy systems. The company's quarters were in room 626. Mr. Robbins, purchasing agent, and Thos. G. Grier, western manager, 128 West Jackson boulevard, did the honors and reported as well satisfied with the orders received and interest shown.

The Calculagraph company, 9-11-13 Maiden Lane, New York city, was represented by Henry Abbott, president, and W. C. Garrison, one of the directors. Much interest was attracted by this unique instrument, which records the exact time consumed in a toll line conversation.

The International Telephone Manufacturing Co. was well represented. President Henry Shafer, W. E. McCormick, M. H. Bently, D. E. Corliss, D. L. Barry, J. C. Burmeister, W. Hennessy and R. N. Stites were present. A 400-line switchboard, recently completed for the Claypool Hotel, Indianapolis, Ind., attracted much favorable comment. Telephones and telephone parts were also displayed.

The Gould Storage Battery Co. of New York was represented by E. L. Draffen, western manager, Rookery building, Chicago. He was assisted by E. G. Gallagher, engineer. Battery plates were shown and methods of construction were explained.

The National Autophone company was represented by Samuel Insull, president, and C. H. Wilmerding, secretary. The exhibit was unique and attractive.

The Eureka Electric company was strongly represented by President I. J. Kusel, H. Kusel, D. L. Canman and H. Rosenow. An exhibit of telephones, switchboards and parts occupied a sixth-floor parlor. Their souvenir was a telegraph sounder.

The Illinois Electric Specialty Co. was in evidence in the south parlor, where President F. B. Patten took pleasure in showing his line and giving away handsome souvenir pipes. His exhibit was novel and interesting and received a just share of attention.

D. M. Fulmer, president of the D. M. Fulmer Lumber company of Chicago, was a convention visitor.

The Moon Manufacturing company of Chicago extended a hearty welcome to delegates to call at the factory on Canal street. Manager Procunier reported many visitors.

The H. B. Camp Co. exhibited a line of vitrified conduits in all styles, from single way to nine way ducts. The exhibit was in charge of J. A. Hammett, 85 Hartford building, Chicago representative.

The Lindsley Brothers company, dealers in cedar poles, exhibited photographs of the company's yards, as well as illustrations of pole cutting and finishing. A "pole" cat button proved an attractive feature. Messrs. Geo. L. Lindsley, C. P. Lindsley of Spokane, Wash., Edward A. Lindsley and Manager J. A. Navarre constituted the convention staff.

The North Electric Co. of Cleveland, Ohio occupied an elaborate suite of rooms on the sixth floor. An exhibit of common battery and magneto call switchboards and a large display of telephones was made. An illuminated sign in the hallway guided visitors safe to the portal of the exhibit. Souvenirs consisting of lucky rabbits' feet and miniature transmitters. The exhibit was in charge of F. F. Sapp, C. H. North, H. G. Knight, J. F. Davis, George B. Pratt and L. G. Bowman.

Siemens & Halske, after extensive experiments with Prof. Pupin's long-distance telephone invention, have acquired his patent for Europe and intend to connect all the great centers.

The experiments have shown that with the Pupin wire a message is plainly audible to a person standing ten yards from an ordinary receiver.

Digitized by Google

Telephone Magazine

An Independent Illustrated Journal

Entered at the Chicago Postoffice as mail matter of the second class.

Copyrighted, 1902, by Telephone Magazine Publishing Co.

PUBLISHED MONTHLY BY

The Telephone Magazine Publishing Co.

JNO. R. DARE, President.
J. A. CAMPBELL, Sec'y

Medinah Temple, - Chicago, U. S. A.

TEL. HAR. 4148.

GEO. H. GOULD, Mgr. Advertising.

LONDON: 2 Exeter St., Strand, London: W.C.

CHICAGO, DECEMBER, 1902.

Subscription Rates.

One Dollar per annum in advance; fifty cents for six months in advance; sample copies ten cents each

Subscriptions may be sent by express, draft, money order or registered letter. We cannot use checks on local banks unless exchange is added; send draft on New York or Chicago. Make all remittances free of exchange, and payable to Telephone Magazine Publishing Co. Currency forwarded in unregistered letters will be at sender's risk.

Advertising Rates.

Made known on application. The value of The Telephone Magazine as an advertising medium is unquestioned. The character of the advertisements now in its columns tell the whole story. Advertisements, to secure insertion in the issue of any month, should reach this office not later than the fifth of the current month.

Correspondence.

Readers of The Telephone Magazine are cordially invited to send items relating to telephony or any of its branches, and the cooperation of telephonic thinkers and workers is earnestly desired. Clear, concise, well written articles are especially welcome and communications, news, news items, local newspaper clippings or any information likely to interest those in the telephone field will be thankfully received and cheerfully acknowledged.

THE CONVENTION.

From the fall of the gavel at the opening session to the close of the last speech at the banquet the convention was a pronounced success. That much of vital import to the great independent telephone interests was derived from the meeting was evident by the speeches, papers and hearty and heated discussions in the convention hall. The attendance, consisting as it did of representatives of all branches of the field, was very gratifying, and sufficed to demonstrate beyond a doubt that the Interstate Independent Telephone Association has become a permanent and necessary adjunct to the interests of independent telephony.

A full realization of the value of this organizing and the co-operating of its members was apparent throughout, and sufficed to strengthen the ties that bind together the independent telephone men in their great battle against the Bell monopoly.

It is only by thus getting together for mutual advancement that the greatest good for the greatest number can be accomplished.

The discussions relative to the interchanging of service with the Bell companies and the use of Bell apparatus demonstrated beyond a doubt the unity of sentiment against the common enemy.

It also plainly showed that the exchange man cannot be too careful in dealing with the Bell. Offers of long distance service from this source frequently turn out more disastrous than the continuance of service without toll connections could have been.

Another feature which asserted itself strongly was the construction and use of toll lines by the independent companies.

Here again the fundamental principle of organization should not be forgotten. Difficulties should be settled without open hostilities, as there is nothing the Bell would like better than to see the independents fight among themselves.

In union there is strength. Let us preserve it.

Digitized by Google

LARGER QUARTERS.

THE TELEPHONE MAGAZINE will remove Jan. 1, 1903, into more commodious quarters in the Monon building, 320 Dearborn street, Chicago.

The change in management has also brought about an entire change in the staff, and if predictions are realized the coming year will be one of renewed prosperity for the oldest independent telephone publication printed.

Mr. Carl E. Kammeyer is no longer connected with the TELEPHONE MAGAZINE, having severed his connection December 1, 1902.

The cartoon of "The Farmer of To-Day" from the *Chicago Tribune* that we reproduce in this issue is a story without words, and shows what wonderful development the telephone has done for the man on the farm.

A recent interview with a group of users of rural telephones disclosed so many advantages that the interviewer wondered how any farm household can suffer itself to be deprived of the services of this messenger, that for speed and reliability surpasses the imagined wonders of fairy land or the magic of "Arabian Nights." The telephone dissipates the traditional isolation of the farm home. It puts the latter in immediate touch with neighbors, adjacent towns and the world's markets. It is a tie that binds.

To the Independent telephone manufacturer we must give the credit for all this, a credit far more worthy than Joe Leiter's dollar wheat ever could make it.

Hannibal, Mo.—Officials of the Bluff City Telephone company, which is to construct a $70,000 exchange in the city, held a meeting with representatives of the Adams and Pike county telephone lines in Illinois to make arrangements for the laying of a submarine cable under the Mississippi river to connect the different exchanges. Permission has already been secured from the government for the laying of the cable.

E. M. COLEMAN.

Secretary Interstate Independent Telephone Association.

E. M. Coleman of Louisville, Ky., whose picture appears in this issue of the magazine, began his career as an Independent telephone man in 1898. At that time he was one of the directors of the Commercial club of his city, which is composed of 1,200 to 1,500 of the best men of Louisville, at that time he also was president of Coleman Bros.' Clothing Mfg. Co. and associated with the Columbia Finance & Trust company. At this time the Ohio Valley Telephone company, which was the Bell licensee of Louisville, was absorbed or bought by the Cumberland Telephone and Telegraph company, with headquarters at Nashville, another licensee of the Bell company. The Cumberland company immediately issued a schedule of rates, increasing the price of rental, which created considerable dissatisfaction. Noting this, Mr. Coleman immediately brought the matter before the directors of the Commercial club, and he was appointed as one of a special committee to investigate telephone matters throughout the United States. Opening up correspondence with 100 different cities and, after one year's hard work and investigation, he succeeded in getting the Commercial club committed to the establishment of an Independent telephone plant in Louisville. With this auspicious start, he soon got other business organizations to endorse the scheme—such organizations as the Retail Grocers' association, the Retail Druggists' association, etc.; then began the almost impossible task of securing a franchise from the city government.

After six months of patient toil and watchfulness, he was successful in securing the franchise which, under the laws of his state, had to be sold at public auction. At this sale he was the successful bidder, and soon had associated with him a number of the representative business men of Louisville, a competent construction company was employed and the work begun.

Securing a franchise for the construction of a telephone plant in Louisville, Mr. Coleman held the key to the tele-

Digitized by Google

phone situation in the state of Kentucky and southern Indiana, Louisville being the metropolis of that territory. As a result, the Louisville Home Telephone company, with a capital of $1,500,000, and the Independent Long Distance Telephone and Telegraph company, with a capital of $1,500,000, have been established and are now in successful operation.

The Louisville Home Telephone company is now serving 6,000 subscribers and have a plant with an ultimate capacity of 12,000.

The Independent Long Distance Telephone and Telegraph company has built long distance lines throughout Kentucky and southern Indiana, and is now successfully operating these lines and building many extensions.

Mr. Coleman is now secretary of the Louisville Home Telephone company, vice president of the Independent Long Distance Telephone and Telegraph company; and, at the last meeting of the Interstate Independent Telephone association, which was held in Chicago last April, he was elected secretary of that association, and has worked incessantly since that time to make the coming convention in December a great success.

As the result of making a gallant fight in the city of Evansville, Ind., Mr. Coleman succeeded in having the city government order the Cumberland Telephone and Telegraph company (Bell) to remove all of its apparatus, poles, wires, etc., from the streets and highways of that city, and an Independent plant will be established at once.

Being a man of education and wide business experience, coupled with a thorough knowledge of men and conditions, Mr. Coleman can claim the honor of being one of the shrewdest manipulators in the telephone field in this country; is full of energy, and does not know failure when he undertakes the accomplishment of any enterprise.

N. E. Liggett, owner of the Marysville, Ohio, Telephone Company, is giving his lines a thorough overhauling. He is at present installing new cable. Mr. Liggett attended the convention.

AFTERTHOUGHTS.

Hurrah!

Of course, you were there.

Did you get a souvenir?

You couldn't miss the south parlor.

All footsteps led to Room 612.

Everybody helped to make the affair a grand success.

President Raney proved to be the right man in the right place.

The ladies made the banquet a success and for that we bless them and extend our thanks.

Did you see Jones lead the band?

What the attendance lacked in numbers was made up in enthusiasm.

The exhibitors reported good business and feel well repaid for their labor.

We didn't have Sousa as a leader of our orchestra, but we had a very good imitation.

Did you get a pass on Raber & Watson's railway? It ran from pole to pole.

The American Electric had the floor, but the Swedish-American had the ceiling.

The elevator boys called out "The Midway" when they came to the sixth floor and they are always wise.

No one overlooked the "Chicago method" the Chicago Telephone Supply Co. were showing, even if they do come from down in Indiana.

The wonderful dry battery the Electric Appliance had on exhibition, drew a crowd all the time—some came back so often to see it that the young man who was in attendance called them the "Common Return."

The North Electric were as far north as they could get unless they broke through into the Studebaker building.

The Sterling were very liberal with their souvenir desk stands. President Doolittle—did much—in making his headquarters a very popular place.

The American Electric and Swedish-American ran a close race in the sign contest—with plenty of close followers—but all deserve honorable mention as they certainly made the dignified Auditorium look like a city directory.

Kusel of Eureka Electric helped to make more noise than anyone with his generous distribution of telegraph tickers.

Digitized by Google

"One of our Specialites" of the I. E. S. Co. became quite popular and caused the crowd to "rubber" into Patten's exhibit in hope that they would get a glimpse of that "smiling countenance." Everybody called her a "dream," same as the souvenir pipes they gave away.

Kirkpatrick, of McRoy Clay works, was every inch a good fellow. He gave away automatic tape measures and steel rules and knew where they had Central Energy on exhibit.

The busy signal, which attracted visitors to the Holtzer-Cabot exhibit was literally confirmed upon entering. Mr. Harding and his co-workers were busier with the constant calls than the man who made business.

P. C. Burns was almost induced to make a speech Wednesday evening, but he didn't—the fellows were not strong enough to hold him.

The visitors were conducted through the underground conduit at a "dog trot." Entering at Harrison and Van Buren streets and coming out at Lake and State streets. It was a case of a Turkish bath without the rub-down. for we were there.

E. B. Overshiner of Swedish-American was in the south parlors with the goods, the glad hand and a carnation for everyone. What more could you ask for?

One of the delegates was overheard to remark to another, "That this is the last telephone convention I will ever attend." "Why?" inquired the other. "Because," replied the delegate, "when I left home I had four children and I just received a telegram that our family had been increased to five." Could you blame him.

Colonel Coleman, in his speech at the banquet, openly declared himself to be a candidate in the matrimonial field, and we do hope the matrimonial agencies in this city we have been reading about lately won't hear of it.

Frank Jones of American Electric Fuse Co. was pronounced an excellent chair-speaker. His little say proved to be timely and to the point.

Several speakers at the banquet touched Alfred Stromberg's sore point—the boil. Why bring back sad memories?

Harry McMeal of *Telephony* made a very short speech, when called upon, and some one was cruel enough to say that his long suit was "Heart to Heart talks."

Jas. Wolff of New York Insulated Wire Co. had the chance of his lifetime to make "good" when called upon, but he respectfully declined—another "Heart to Heart" man.

Col. J. D. Powers' clever and amusing little story about the naming of the twins reminds us of the native of one of our recent possessions who learned what he knew of the English language from an American almanac. One day a happy thought struck him that he would give his children American names. So he consults the almanac and picks out the names he thinks best, naming them respectively, "Neuralgia," "Erysipelas" and "Spinal Meningitis."

Let us all be at the convention next year. REUBEN.

PETE'S PIPE LINES.

"Say, Bill," whispered the floor-walker to the night-clerk, as the rest of the Hammer club fluttered into the smoking-room after supper.

"Nothing doing," responded the key-distributer, turning his pockets inside out. "I haven't got a centime."

"You wrong me, old man. It isn't a touch this time?"

"The evidence is against you. But why all this secrecy?"

"I merely wanted to ask you the names of those two little ladies who've taken the second floor front suite."

"Well, you're the fifth one of the bunch that has braced me for that information since Wednesday night, but it's no use. You're all in the alsos with that pair."

"As to that, I guess we run neck and neck with the leaders. But, give me a line on them. Who are they, and what do they do?"

"I'm not any too strong on information myself, but I can stake you to that much. The tall blonde is Hulda Wire, the little brunette is Dewdrop Nichol, and they both work in the telephone office."

"A remarkable paradox, isn't it?"

"I don't see anything very peculiar about two nice young ladies working in a telephone office."

Digitized by Google

"It isn't that, but how strange that the light one should be so heavy and the dark one so light."

"Well, they're a couple of jolly girls, anyway, although I'll admit they're a trifle too talkative."

"Very likely! I suppose they call on the Pardee-Lyons, the Dwyers, the Tolls, and the Bells, and a few others of that circuit, don't they?"

"Well, Dwyers are busy most of the time, but the rest of that outfit are re-

THE "POOR" FARMER YESTERDAY AND TODAY.

In the past, ignorance and isolation.
In the present, intelligence and information. (Chicago Tribune.)

ceiving almost any time the girls give them a call."

"That's no drawback in their line of business, but if I thought they were real ladies, I'd like to get you to operate an exchange of names for me. However, they may be only a couple of ringers."

"Well, they don't eat soup with a fork, nor pie with a knife, and I know for a lead-pipe cinch that they're connected with most of the best families in the city."

"Well, just hustle up a bell-hop for me to act as a transmitter for a message I want to send up to the brunette."

"Why, certainly, but take your own chances."

In five minutes Front was working a panel racket on the girls' door, and the subscriber of the note waited in hopes of

Digitized by Google

being installed as the main lion, at the service of the communicative duet. At the end of another five the tip-gatherer slid down the banister with the rapidity of a nickel rattling down the slot, and bumped up against the desk with a thud.

"Well, how do I stand?" asked the floor-walker, passing the kid a quarter. "I guess maybe you'd better polish up these kicks of mine a few lines, and see if there's any dust on my coat.

"That last part of your spiel is all right," answered the button boy, "but there's nothing doing for you with the fairies."

"What's that? Do you mean that I'm on the hook?"

"The chances are you've been cut off for this evening anyway."

"Have they got callers?"

"Not just now, but I've done all I could for you, and that lets me out."

"What came off, anyway, while you were up there?"

"Well, I rapped on the door, and——"

"Sure thing, cross me vest, the first thing I heard was somebody sayin' 'number, please.' 'There's only one,' said I, 'and I have a note for the brunette, whatever her name is.' "

" 'Nichol, please,' said she, turning the key."

"Did she read my note?" asked the ladies' favorite anxiously.

"Sure Mike! She read it over twice, and then threw it over to her chum. 'What do you think, Huld,' said she, 'the bow-legged picture from Puck wants to meet me.' "

"Did she say that?"

"On the dead. Them's her very words."

"Well, let me know the worst. What did her friend say?"

"The blonde was fixing her switch, but she rang off long enough to give you the big mit. 'What,' said she, not that bald-headed cartoon with the first symptoms of hair-lip?' 'The very same.' 'Well, he's lead money with me.' 'Here, too,' answered the swell baby with the dark eyes.

" 'Well, what will I tell him?' said I.

" 'Just say that I've connected him with the fire department, although we think he's a false alarm.' "—F. L. E., in *Chicago Journal.*

TELEPHONES IN PARIS.

For the moment we may transfer the attention of those interested in the telephone question in England to the state of things that exists in Paris. The Parisian telephones are in the hands of the government, and we understand that at the present time there is a complaint of the shortcomings of the system. The principal reason for this outcry is that both the staff and the number of lines are altogether inadequate for the work required of them, and the natural result is an inefficient service. The plea put forward by the French postoffice is that it has not the funds at its disposal to remedy the grievances or to extend the service. Considered in the light of the fact that the charge for unlimited user in Paris is as high as $80 per annum—probably not exceeded in any other large city—this is surprising, and tends to the suspicion of bad management. It is asserted in certain Parisian circles that if a private company had the monopoly instead of the government, it would not only pay its shareholders big profits, but also find without difficulty the wherewithal to modernize and develop the system. This, at any rate, has not been the experience of this country, where the National company insisted on maintaining its high charges until driven to reduce them by the competition of the municipalities in the provinces and of the postoffice in the metropolis.

AFTER A FRANCHISE.

E. H. Moulton, president of Twin City Telephone Co. of Minneapolis, Minn., is in Grand Forks, N. D., with the intention of securing a franchise and interesting the business men of the city in an Independent telephone company to be organized by himself and associates with a view to building a line from St. Paul and Minneapolis to the Canadian line, and eventually into the city of Winnipeg, touching such points as St. Cloud, Alexandria, Fergus Falls, Fargo, Grand Forks and Crookston, and the smaller cities between these points, building lines to Wahpeton and Breckenridge.

Kenosha, Wis.—The Bristol Telephone company of Kenosha; capital stock, $4,000; incorporators, F. E. Stevens, J. A. Rowbottom and C. L. Marsh.

Digitized by Google

MONTHLY DIGEST OF TELEPHONE AND KINDRED PATENTS

Edited by Arthur F. Durand of the Chicago Bar.

Copies may be had, postage paid, by enclosing 5 cents for each one. Address inquiries in care of this magazine or to the Commissioner of Patents, Washington, D. C.

OTTO P. YURGAE, MILWAUKEE, WIS. No. 12,056, November 18, 1902. COMBINED ELECTRIC SIGNAL AND TELEPHONE SYSTEM. Re-issue 12,056.

This is a re-issue of patent No. 655,144, dated July 31, 1900. The invention consists in combining telephone apparatus with call box apparatus. Each call box is provided with a transmitter and a receiver and also with a hook switch E. When released, this hook switch operates like the handle of an ordinary call box, causing the make-and-break device in the box to transmit a signal over the line to the central station. The signal circuit is grounded, while the telephone circuit includes the two metallic limbs of the line. With this arrangement, it is claimed that signals can be transmitted without interfering with the talking circuit.

The patent is assigned to the Signalphone Co. of Milwaukee, Wis.

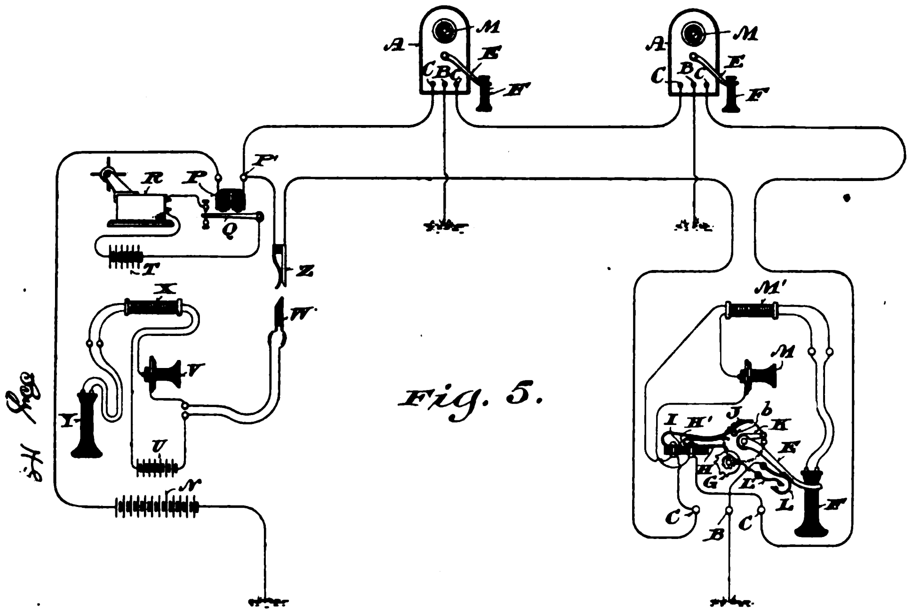

No. 12,056—Combined Electric Signal and Telephone System.

CHARLES L. BURLINGHAM, CHICAGO, ILL. No. 710,946, October 14, 1902. ELECTRIC BELL.

In this ringer the magnet cores project through the adjustment yoke E. The springs G^1 are interposed between this yoke and the ends of the magnets. The nuts *f* are screwed upon the threaded projecting end portions of the cores. In this way, the yoke, which carries the armature H, can be adjusted bodily upon the magnet cores, so as to vary the position of the armature relatively to the ends of the cores.

This patent is assigned to the McDermid Manufacturing Co. of Chicago, Ill.

EDWIN H. COLPITTS, BOSTON, MASS. No. 712,766, November 4, 1902. COMPOSITE TRANSMISSION OVER LOADED ELECTRIC CIRCUITS.

The object of this invention is to per-

mit of the loading of the circuit and the effective introduction of terminal transformers without any breaking or discontinuity in the telegraphic circuit conductors and without impairing the operation of the telegraphic circuits.

the transformer and the connection of its windings in the two circuit-sections, respectively, before combination with the characteristic feature of the invention. Fig. 4 is a detail illustrative of a modified arrangement of the said characteris-

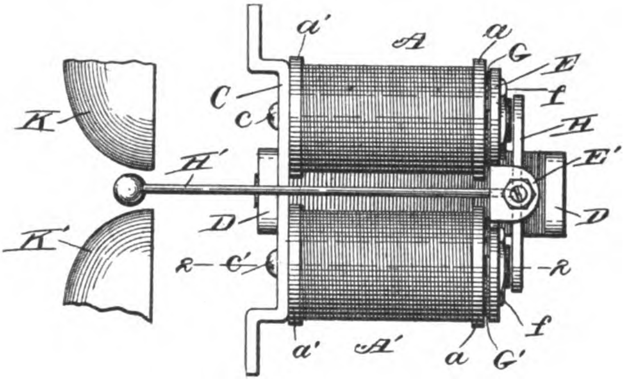

Fig. 1.

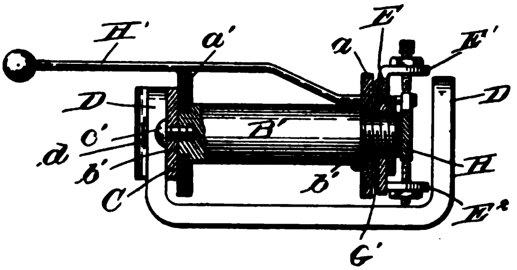

Fig. 2.

Fig. 4.

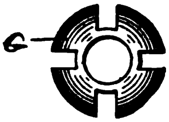

Fig. 3.

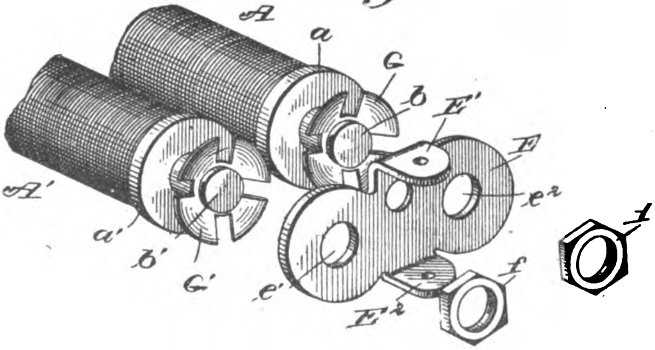

No. 710,946—Electric Bell.

In the drawings, Fig. 1 represents the application of the invention to one end of a loaded composite circuit fitted with a transformer. Fig. 2 shows a complete composite circuit with both terminal stations similarly fitted. Fig 3 illustrates

tic feature of the invention in association with a transformer, and Fig. 5 represents a further slight modification of the same.

The conductors are connected serially to constitute the direct and return wires of the telephone circuit, and are each

Digitized by Google

provided with ground wires, which severally constitute independent telegraphic circuits. The loading coils are systematically arranged at periodic intervals in the telephone circuit. A transformer at each terminal station of the telephone circuit divides the circuit into line or loading and terminal or unloading inductively connected sections, the transformer having its windings respectively in said sections. There is also a condenser included

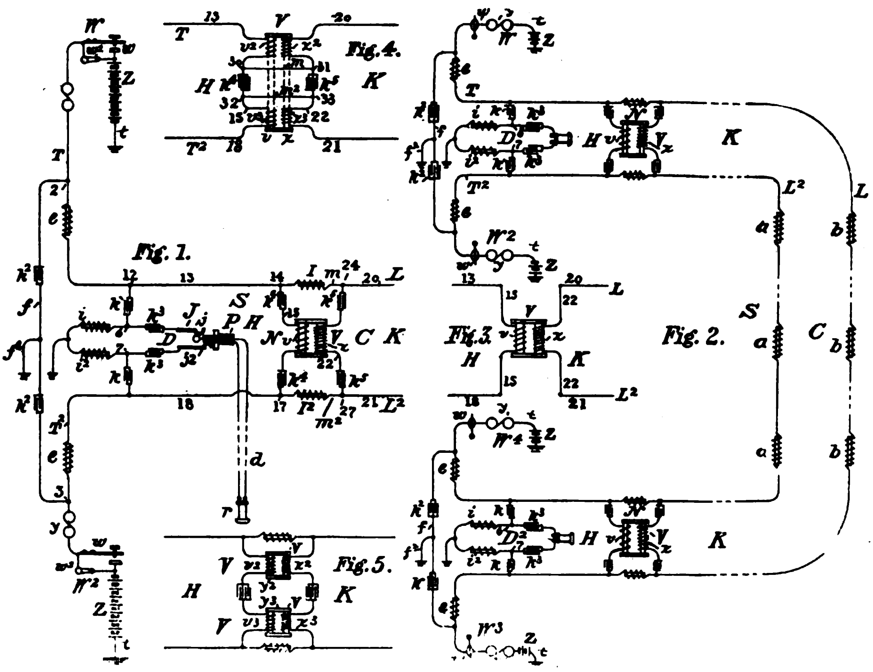
No. 712,766—Composite Transmission Over Loaded Electric Circuits.

in each section, together with the transformer winding thereof, so as to maintain the inductive continuity of the sections, while disestablishing inductive continuity between the telegraphic circuits. Furthermore, an inductive connection for each telegraphic circuit is associated with each transformer, uniting the corresponding conductors of the loading or unloading circuit connections, and establishing the conductive continuity thereof around the conductors for the passage of telegraphic currents. An electro-magnetic resistance of high inductive device of some kind is included in the inductive connection to impede the passage of voice currents.

This patent is assigned to the American Telephone and Telegraph Co. of New York.

Charles G. Burke, Brooklyn, N. Y. No. 713,744, November 18, 1902. Telephone System.

This is a scheme for improving the transmission. It is described as being applicable to all telephone systems, and especially to systems in which single ungrounded wires are employed as lines. In the patent, there are several figures showing different applications of the invention, and illustrating various modifications. The accompanying drawing illustrates the application of the invention to a single ungrounded line wire. The inventor's description is as follows:

The object of the invention is, primarily, to secure a higher efficiency in operating telephone systems generally, and especially those in which the line conductor is a single or ungrounded wire; and it consists in arranging the instrumentalities employed in the system in the special manner hereinafter more fully described.

The invention also consists in the novel features the more important of which are realized by connecting the circuit of the transmitter, transmitting-battery, and primaries of the operating induction-coils with the line and also by connecting one terminal of an accumulator of electrical energy, such as a secondary battery, with sponding terminals of the secondaries included therein, the several coils in each case being connected together by their opposite terminals. By this arrangement the line as a whole may be regarded as composed of two sections, all the instruments in each section being connected together in series opposite terminals, while

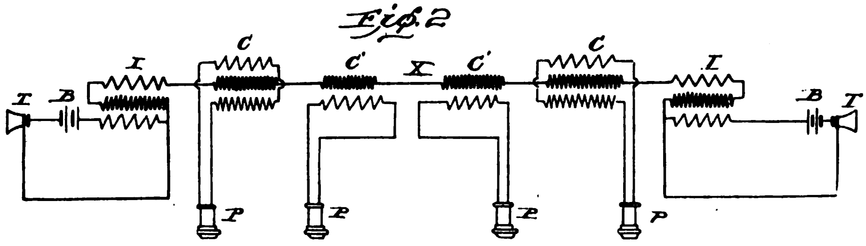

No. 713,744—Telephone System.

the local circuit of the operating-battery, transmitter, and primaries of the induction-coil and the other terminal of the independent battery to some other accumulator or reservoir of electricity.

In carrying out these improvements I employ the usual transmitters, transmitting-batteries, and induction-coils at opposite ends of the line; but in addition thereto I preferably use one or more transforming-coils at each station and two magneto-telephones as a receiver, which are connected up in the low-potential or coarse-wire winding of the transformers.

In practice I find it an advantage to have an extra coil or winding on the induction-coils used in connection with the transmitter for developing the high-potential pulsations in the line and also in those which transform the line pulsations with the low-potential pulsations which operate the receivers. These extra coils or windings preferably differ from the main windings in number of convolutions and resistance, being less in each case; but they are wound in the same direction. I find, moreover, that to receive the highest efficiency it is important to connect up in an exactly corresponding order at each end of the line the transmitters, batteries, induction-coils, and transformers to connect the telephone-receivers to the locals of the transformers at both ends of the line by corresponding terminals and to connect the line wire or wires at each end of the system to corresponding terminals... the sections themselves are connected to one another through the line by like terminals. From this it will be seen that any number of coils may be included in a section so long as this order of their mutual connections is observed, but that the complete line or circuit has but two

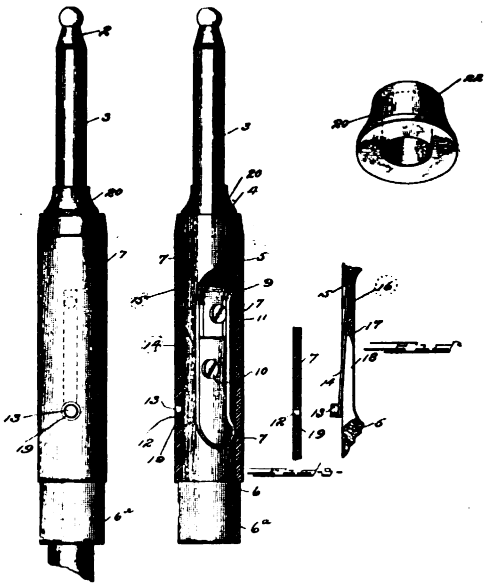

No. 711,556—Telephone Switchboard Plug.

sections, which, however, compose but a single complete organization. In this respect the two line-sections may be regarded as somewhat resembling the two bobbins of a neutral electromagnet, both tending to mutual co-operation and to the effecting of a common purpose what-

ever may be the direction of the operating-current.

Henry P. Clausen, Chicago, Ill. No. 711,556, October 21, 1902. Telephone Switchboard-Plug.

This is a very ingeniously constructed switch plug. Its shell of insulation 7 is locked in place by a spring catch 13, which engages a small opening in the side of the shell. In this way, the shell can be removed without the necessity of employing a screw driver to remove the usual screw fastening. In removing the shell, all that is necessary is to simply press the spring catch inward, so as to disengage it from the opening in the shell. The removable rubber ferrule 20 is also a novel and advantageous feature.

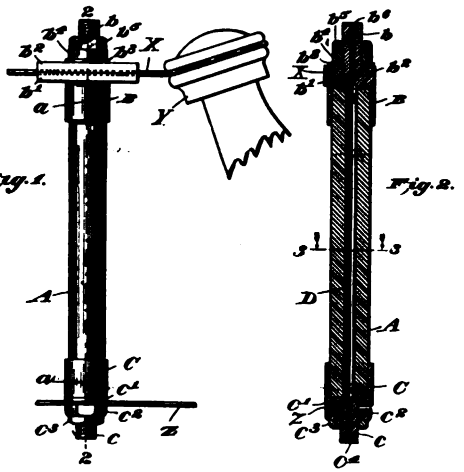

No. 711,921—Fuse.

This patent is assigned to the American Electric Telephone Co. of Chicago, Ill.

Frank B. Cook, Chicago, Ill. No. 711,921, October 21, 1902. Fuse.

This is the patent which covers Mr. Cook's well-known form of line fuse. It consists of the hollow tube A, having one end provided with the elongated clamping jaws b^1 and b^2 and having its other end provided with the binding or clamping nuts c^2 and c^3. The fuse wire D extends through the bore of the tube and is soldered to the ends of the hollow stems c and b. With this arrangement, the elongated jaws can be clamped directly upon the line-wire, as shown in Fig. 1. The bridle wire is connected to the lower end of the fuse, the latter, in this way, serving as a medium of connection between the line wire and the bridle. This is the fuse which forms a part of Mr. Cook's system of complete protection, which was described in a former issue of the Telephone Magazine.

Albert J. Parke, Boston, Mass. No. 711,589, October 21, 1902. Enclosure for Telephones.

The enclosure 14 is of cloth and is arranged in the form of a two part curtain adapted to be drawn apart in the center to afford access to the telephone. The upper portion of the curtain-like enclosure is supported upon a number of swing-

Fig. 1.

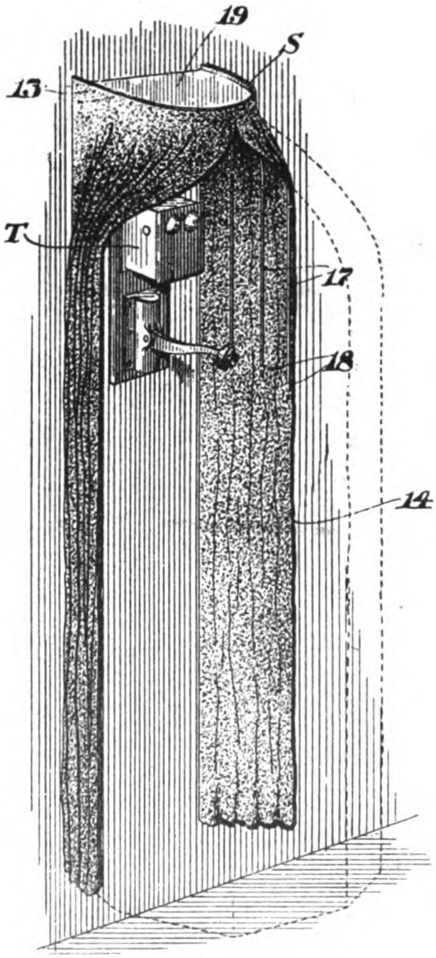

No. 711,589—Enclosure for Telephones.

ing rods 17, which are all pivoted at 15. These rods can be swung back at each side, as shown in Fig. 1, so as to part the curtain-like enclosure at the center. Mr.

Fig. 2.

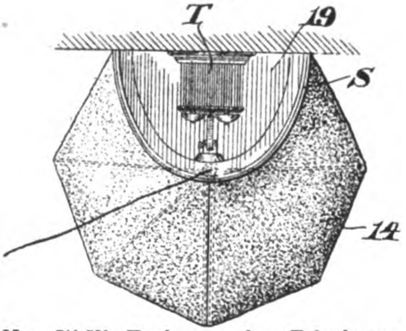

No. 711,589—Enclosure for Telephones.

Parke claims that an enclosure of this character has numerous advantages over the ordinary booth.

ALBERT J. PARKE, BOSTON, MASS. No. 711,588, October 21, 1902. ENCLOSURE FOR TELEPHONES.

This is the companion patent to Mr. Parke's other patent. In this case the

Fig. 3.

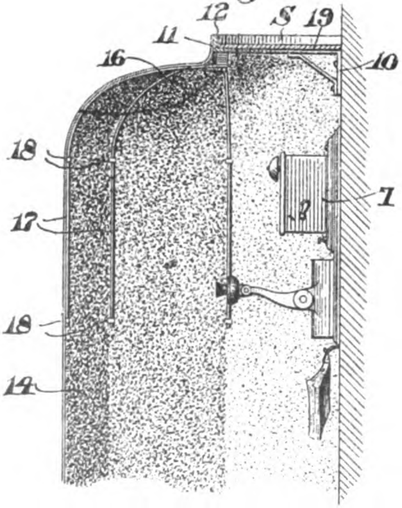

No. 711,589—Enclosure for Telephones.

booth or enclosure consists of a hood 17, which is secured at its top to the upper wall 10. This upper wall is provided with a glass or skylight 18. The lower part of the hood is mounted upon the swinging bail-shaped rod 16. This permits the hood to be swung upward or raised in the manner shown in Fig. 2.

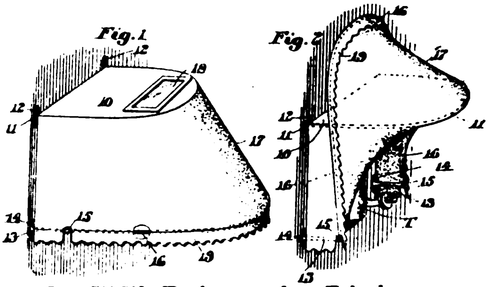

No. 711,588—Enclosure for Telephones.

EDWARD GARDNER LEWIS, ST. LOUIS, MO. No. 712,559, November 4, 1902. COIN-CONTROLLED APPARATUS FOR TELEPHONES.

This appears to be an attachment, by means of which an ordinary telephone may be converted into a nickel or dime telephone. The invention consists of a

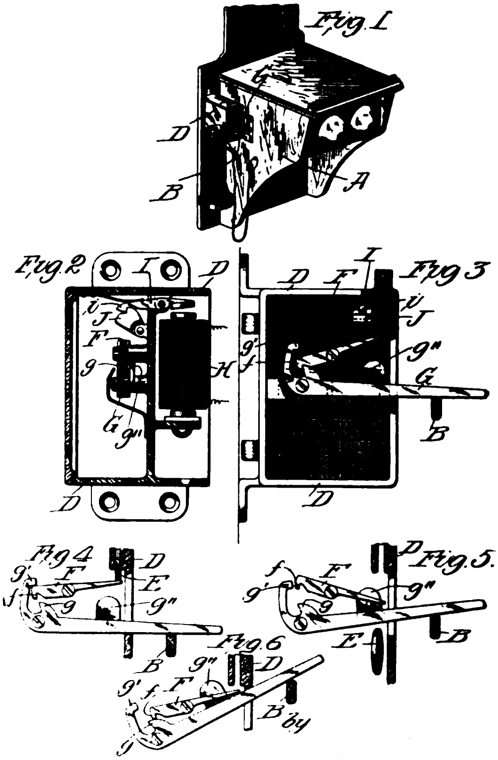

No. 712,559—Coin-Controlled Apparatus for Telephones.

box or casing D, which is secured to the wall at the side of the telephone, and which contains an arm G for locking the telephone hook-switch. When a coin is

Digitized by Google

placed in the slot, it causes the catch F to release the arm G, thereby allowing the hook-switch to rise when the receiver is taken down. When the arm G falls, the catch is then returned to its normal condition. When the subscriber is called, the magnet H is energized, thereby causing its armature *i* to disengage the pivoted weight J, which then acts as a coin. In rising, the armature restores this pivoted weight to its normal position. The patent is assigned to the Coin Controller Co. of St. Louis, Mo.

WILLARD M. MINER, PLAINFIELD, N. J. No. 711,640, October 21, 1902. TELEPHONE-RECEIVER.

In this receiver the magnets are supported upon a ring C. This ring is

Fig. 1.

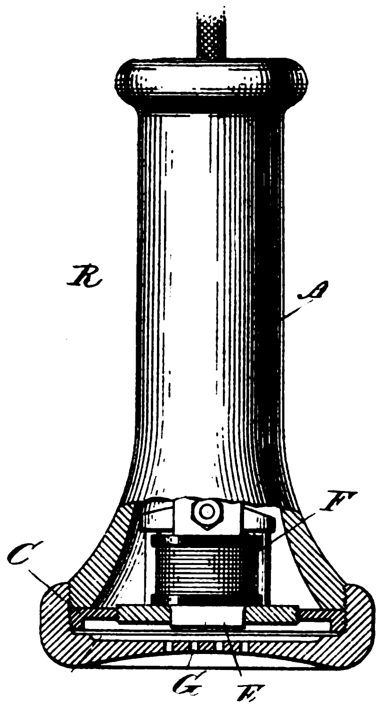

No. 711,640—Telephone Receiver.

clamped between the end of the casing A and the cap B. The cap also holds the diaphragm in place upon the ring. Perforations G in the center of the cap take the place of the ordinary opening.

This patent is assigned to the Sun Electric Co. of Camden, N. J.

ARTHUR THOMAS MILNOR THOMSON, MIDDLESEX, ENGLAND. No. 712,619, November 4, 1902. ELECTRICAL-RELAY.

This is a relay adapted more particularly for use in systems in which the ringing is done automatically. In the drawings, the generator is connected with the line as soon as the plug is inserted in the jack. The current then con-

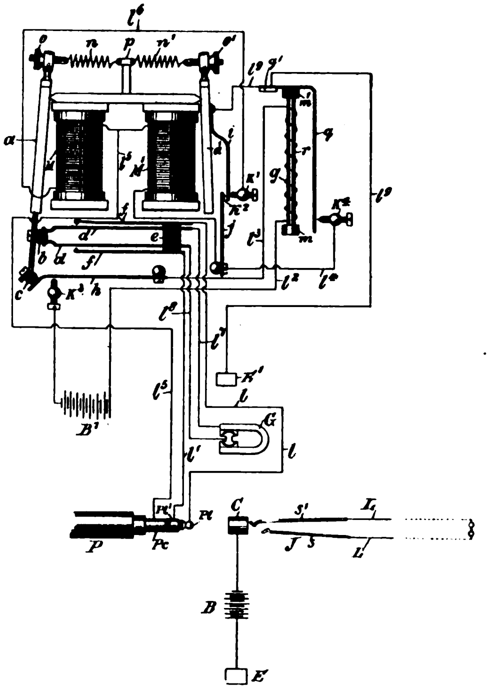

No. 712,619—Electrical Relay.

tinues to ring the bell at the subscriber's station until the rod *r* expands sufficiently under the heat generated in the coil *g* to disconnect the generator from the line. Thus the subscriber's bell is automatically rung for the period of time which it takes the rod to expand sufficiently to bring the contact *q* into engagement with the contact K^4. The patent contains other drawings illustrating various substitutes for the rod and heating coil. In one case, the inventor proposes to employ a clock-work device. Again, he describes an arrangement by which an electric motor may be made to serve as the time expending device.

Digitized by Google

JOSEPH WEST BROWN, PHILADELPHIA, PA. No. 711,615, October 21, 1902. MOUTHPIECE FOR TELEPHONE-TRANSMITTERS OR SPEAKING-TUBES.

The invention in this instance consists of a mouth piece, having an annular chamber adapted to contain an antiseptic or germicide. The fumes from the antiseptic or disinfectant are conveyed into the mouth piece through the perforations d^7 in the cylindric core d^3. A layer of porous material d^8, such as cloth or other like material, is wrapped around the outer surface of this perforated core.

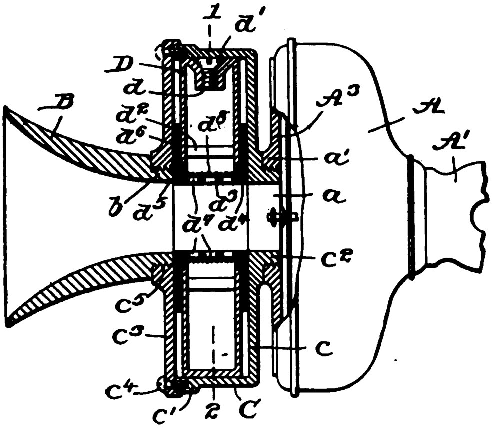
No. 711,615—Mouthpiece for Telephone Transmitters or Speaking Tubes.

The patent is assigned to Joseph G. Brown of Odessa, Del.

ALVA D. JONES, LOUISVILLE, KY. No. 714,189, November 25, 1902. TRAVELING CONTACT FOR RAILWAY TELEPHONES, TELEGRAPHS, OR THE LIKE.

The traveling contact described in this patent consists of the absorbent pad A of leather or other suitable material, having the perforations *b*. Cotton batting or other like fibrous material is packed into these perforations and the pad is then enclosed in the casing *d*. The whole is then enclosed in the casing A, which is supported upon the upper end of a lazy tong device D. The casing for the pad also supports a receptacle B, containing saltpeter or other material for the purpose of increasing the conductivity of the pad. Steam is then conducted through the pipe C to the receptacle B, so as to keep the pad moist. The casing A is cut away so as to expose the lower side of the pad which travels upon the line wire.

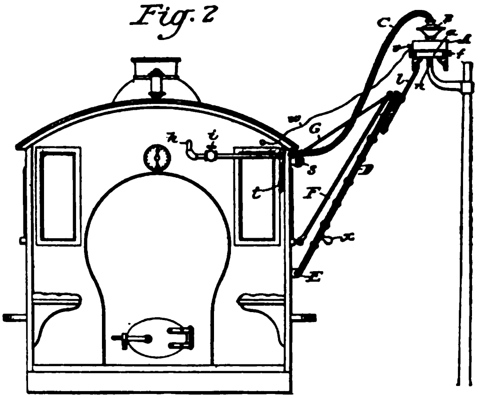

No. 714,189—Traveling Contact for Railway Telephones, Telegraphs or the Like.

JOHN A. WARRICK, SHELDON, ILL. No. 714,540, November 25, 1902. TELEPHONE-SWITCH.

This is a selective switch device for either party lines or inter-connecting systems. If subscriber No. 1 desires to

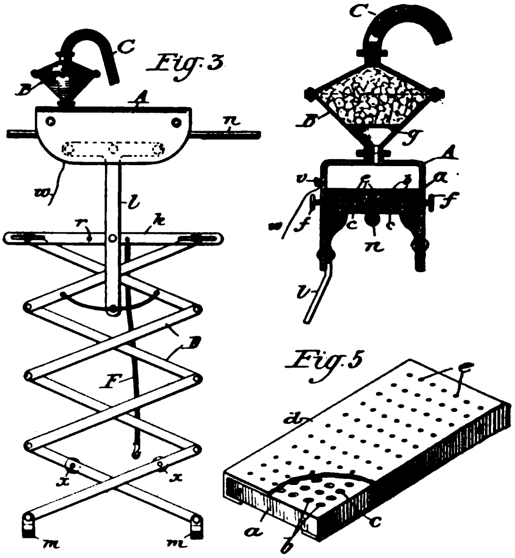

No. 714,189—Traveling Contact for Railway Telephones, Telegraphs or the Likes.

call subscriber No. 4, the former then presses the boss *o* on the swinging arm 1 in the notch or opening No. 4 on the rotary disk *c*. He then rotates his generator *n*, so as to throw current over the line and energize all of the magnets *h*. The energizing of these magnets at the

different stations operates all of the escapements *e*, thereby causing a rotation of all of the disks. Normally, the boss on the arm *1* of subscriber No. 4, is in the notch or opening No. 4. Therefore, when all of the disks have rotated sufficiently to bring the arms at stations Nos. 1 and 4 into contact with the spring contacts *p*, the local circuit of the bell at station No. 4 will then be closed, and the two subscribers are connected. Sluggish bells are employed, so that only the called subscriber's bell will ring.

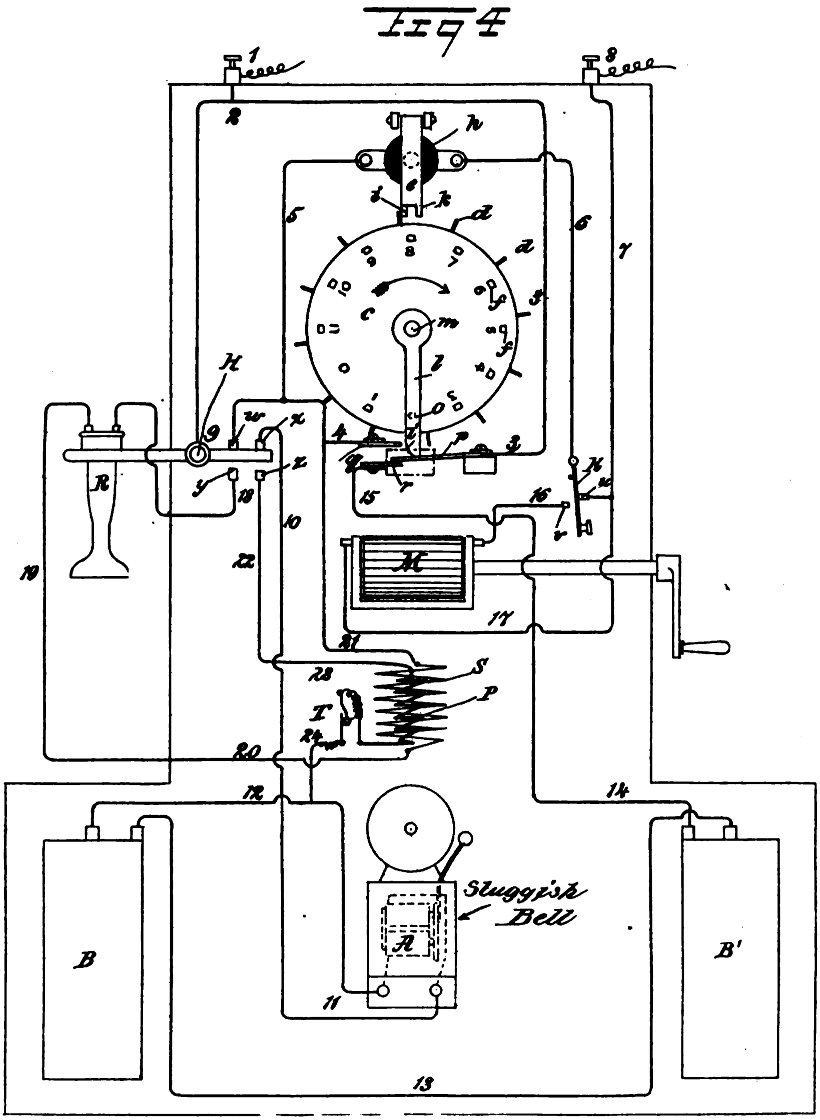

No. 714,540—Telephone Switch.

Charles C. Badeau, Schenectady, N. Y. No. 713,831, November 18, 1902. Fuse.

In this fuse the copper portions *a* and a^1 are arranged near enough together to permit arcing. The fusible metal B unites the two portions, as shown in the drawings. When this fusible metal melts, it starts an arc, which quickly burns away the adjacent portions of the copper strips.

The patent is assigned to the General Electric Co. of New York.

Digitized by Google

HARRY SHOEMAKER, PHILADELPHIA, PA. No. 714,246, November 25, 1902. WIRELESS TELEGRAPHY.

This is a wireless transmission system in which the Hertz oscillators and also the coherers are dispensed with. The improved receiving apparatus consists of the ground 11, to which is connected the wire 12, the latter being connected to the batteries 13. A wire 14a connects these batteries with the cap 14, which latter clamps and holds the ferrotype-diaphragm 15 in place. A rubber cup 16 is secured to this cap. The wire is also connected to the diaphragm. The local circuit 30 is controlled by the re-action between the plates of the receiving apparatus B. In Figs. 1 and 2, two ground connections are employed at each station. In Fig. 4, the usual single ground connection at each station is employed in conjunction with the ordinary air line. Fig. 2 is a sectional view of the novel receiving device.

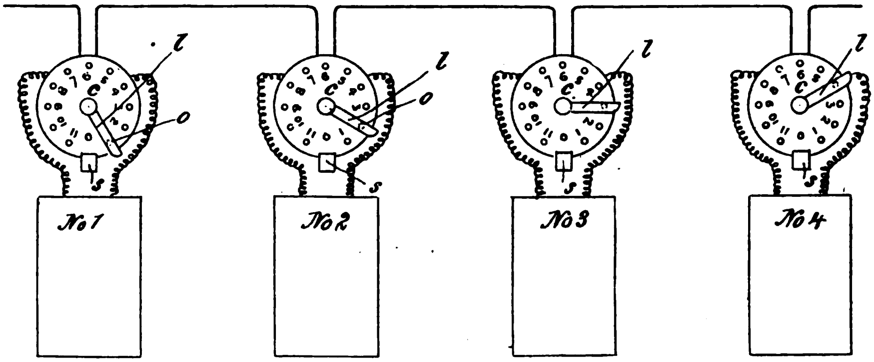

No. 714,540—Telephone Switch.

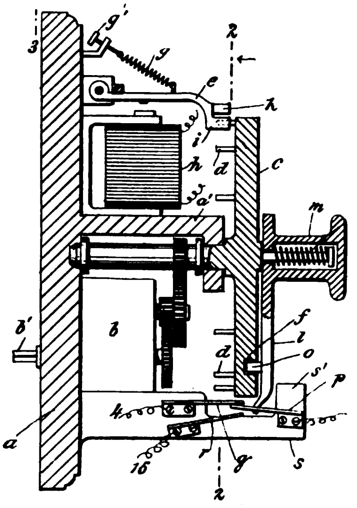
No. 714,540—Telephone Switch.

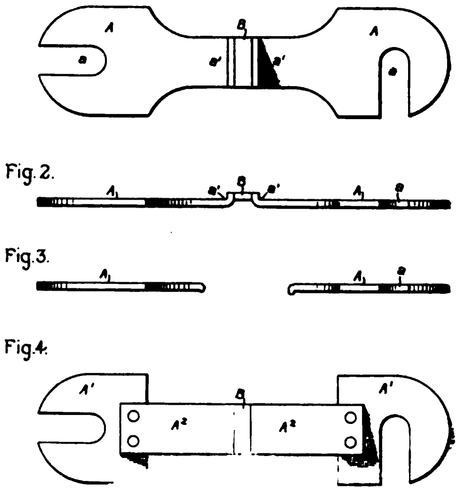

No. 713,831—Fuse.

Fig. 2.

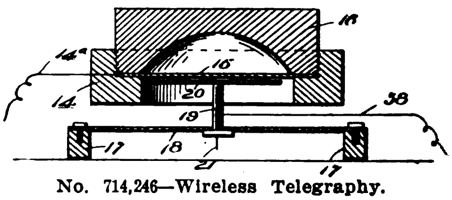
No. 714,246—Wireless Telegraphy.

This patent is assigned to the American Wireless Telephone & Telegraph Co. of Philadelphia, Pa.

Digitized by Google

Harry Shoemaker, Philadelphia, Pa. No. 713,700, November 18, 1902. Wireless Telegraphy.

The invention in this case consists of a novel form of impedence for wireless transmission systems. Instead of using the ordinary impedence coil, the inventor proposes to employ the permanent magnets L, having air gape M, through which the conductor of the local circuit passes. It is claimed that this arrangement lessens the resistance of the local relay circuit, and in other ways gives a more satisfactory result than is obtained by employing an ordinary impedence coil.

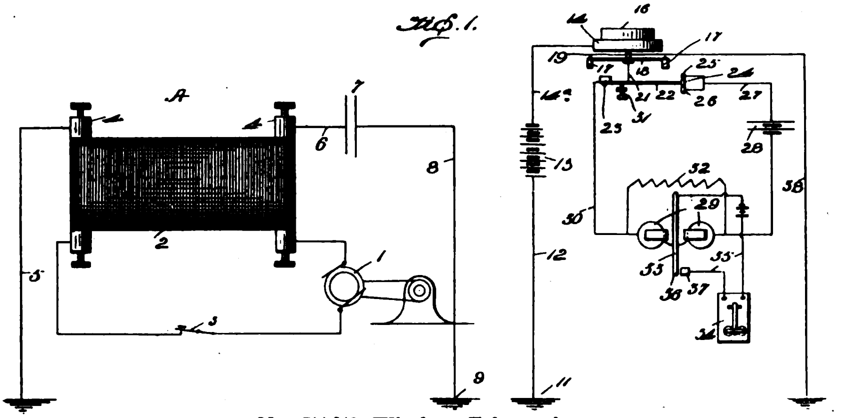

No. 714,246—Wireless Telegraphy.

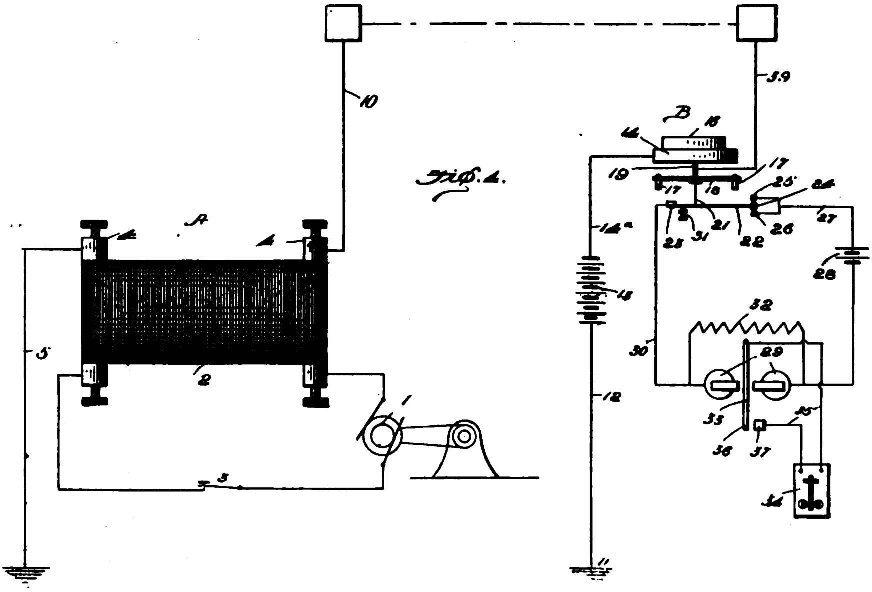

No. 714,246—Wireless Telegraphy.

Harry Shoemaker, Philadelphia, Pa. No. 714,648, November 25, 1902. Wireless Telegraphy.

This is another improvement in wireless transmission. The invention in this instance consists in providing electro-magnets 25, for decohering the coherers. Each electro-magnet is arranged to act on an armature 22, mounted on a coherer. The electro-magnets are energized one at a time by the rotary phonic wheel 24.

David S. Hulfish, Chicago, Ill. No. 712,801, November 4, 1902. Switchboard and Supervisory Signal Circuit.

This is a Bell patent in which the invention consists in a novel method of operating the supervisory signals. When the answering plug is inserted, a shunt is formed around the supervisory lamps by closing of the relay R. When the calling plug is inserted, the lamp S^2 is caused to glow. As soon as the call is answered, the individual shunt for the lamp S is broken, and a shunt is then formed around both lamps by the energizing of the relays R^2 and N. Then, when either subscriber hangs up his 'phone, the shunt around the two lamps is opened, allowing both lamps to rise to full glow. Thus the glowing of one lamp indicates an unanswered call, while the glowing of both lamps indicates the signal for disconnection. In this way, confusion as to signals is avoided.

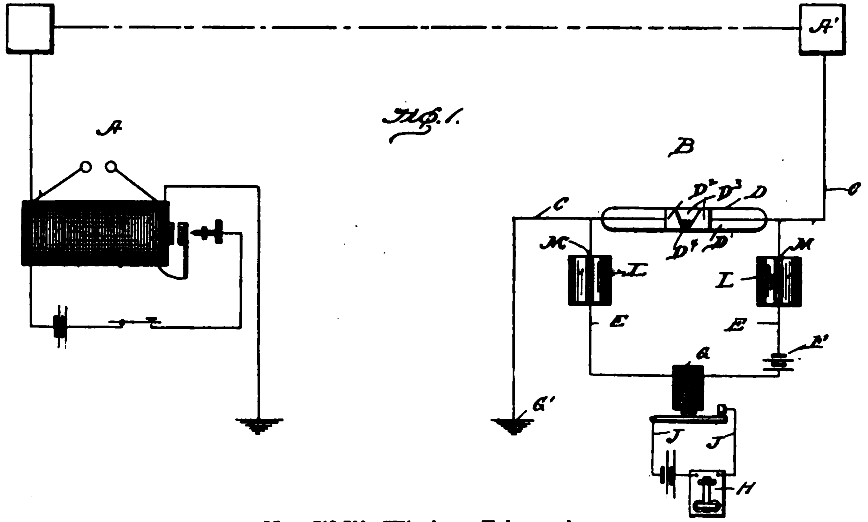

No. 713,700—Wireless Telegraphy.

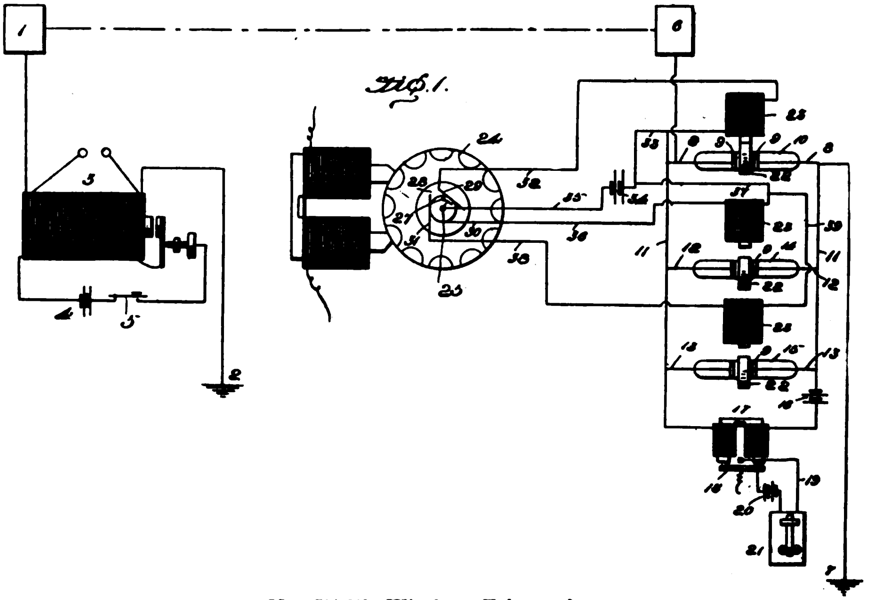

No. 714,648—Wireless Telegraphy.

The patent is assigned to the American Telephone & Telegraph Co. of Boston, Mass.

Digitized by Google

Albert H. Armstrong, Schenectady, New York. No. 714,355, November 25, 1902. Protective System.

This is a scheme for preventing people in the street from being injured by the breaking or falling of high potential conductors. To prevent the conductors from falling, a net-work composed of wires 22, 23 and 24 is arranged below the conductors in such manner as to catch any one of the latter should it break or fall from the poles. As a further precaution, the net-work thus formed of wires is grounded at g^1, and the line circuits are provided with circuit-breaking devices 13, 14 and 15, and also with the ground tap G. Thus, when a conductor falls upon the net-work, a ground circuit is immediately completed which causes one of the circuit-breaking devices to sever the connection between the line and the generator.

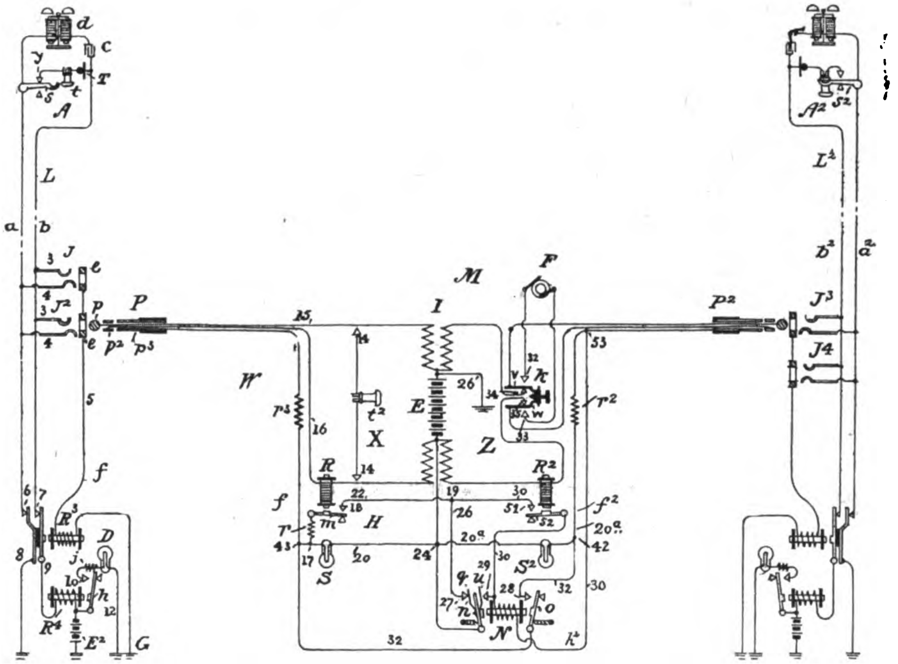

No. 712,801—Switchboard and Supervisory Signal Circuit.

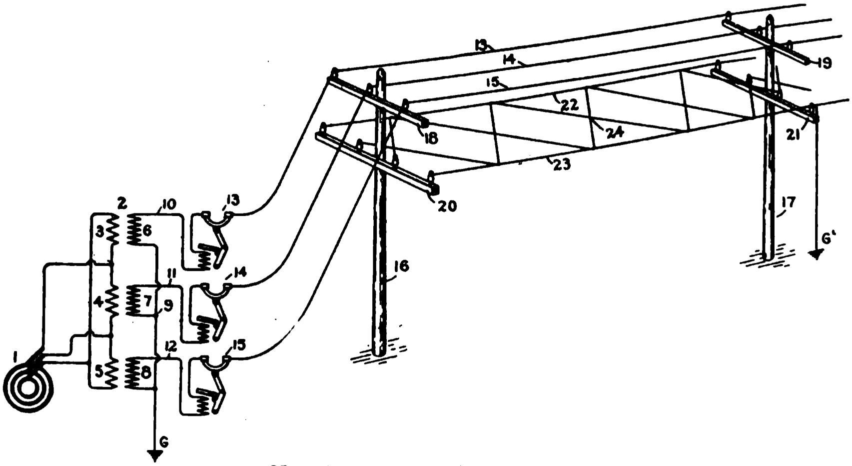

No. 714,355—Protective System.

Digitized by Google

Gales P. Moore, St. Louis, Mo. No. 712,950, November 4, 1902. Telephone-Lock.

This covers a device somewhat similar to the advice described in Mr. Lewis' patent. Mr. Moore's invention consists of the sliding bolt 9, adapted to normally lock the hook switch against rising. This bolt is held in its normal position by the catch 16, having an armature 14. When a coin is deposited in the slot, it strikes the arm 14, thereby releasing the bolt and allowing the hook switch to rise. This patent is assigned to the Controller Co. of St. Louis, Mo.

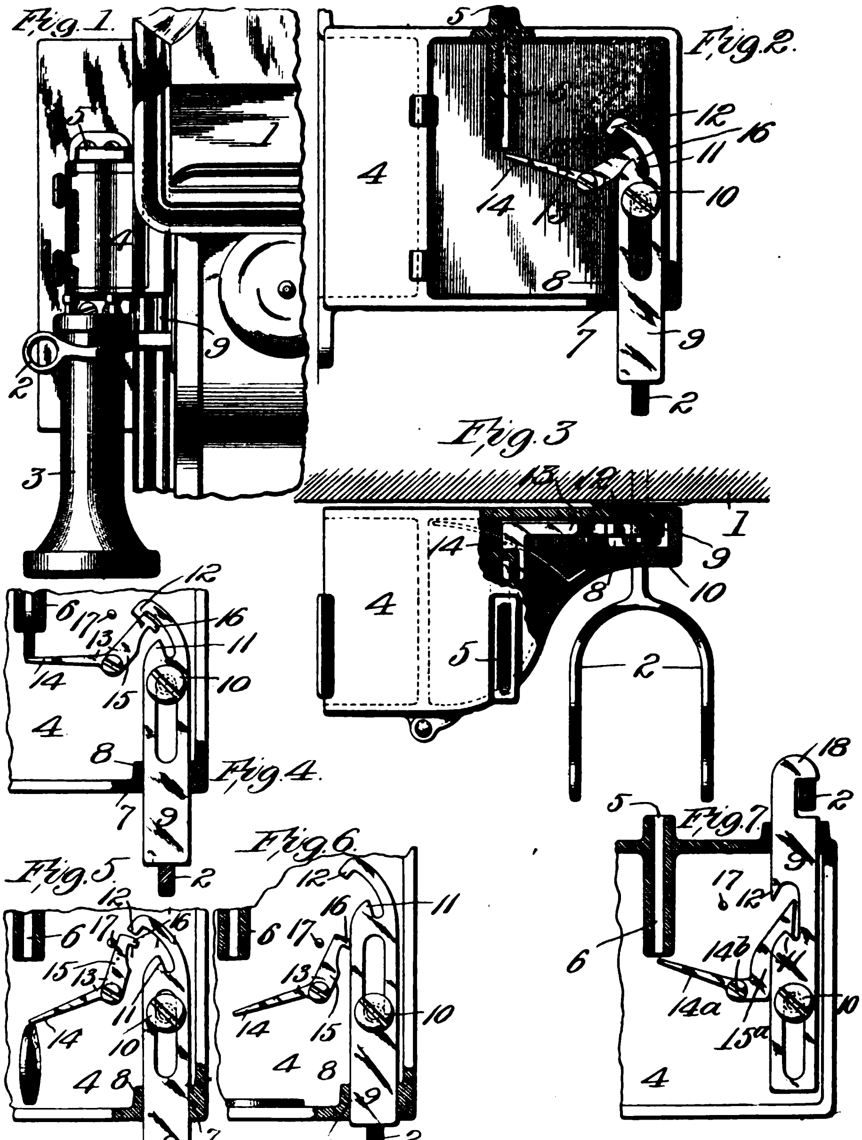

No. 712,950—Telephone Lock.

Digitized by Google

Charles Livingston Hyde, Tuxedo Park, New York. No. 711,974, October 28, 1902. Sound Concentrator.

This is a device for focusing or concentrating sound waves coming from a distance upon the diaphragm of a telephone transmitter. The drawing shows two forms of the concentrator, as it is called. In Fig. 1, only flat deflecting surfaces are employed, whereas, in Fig. 2, sound waves are deflected from round or concave surfaces.

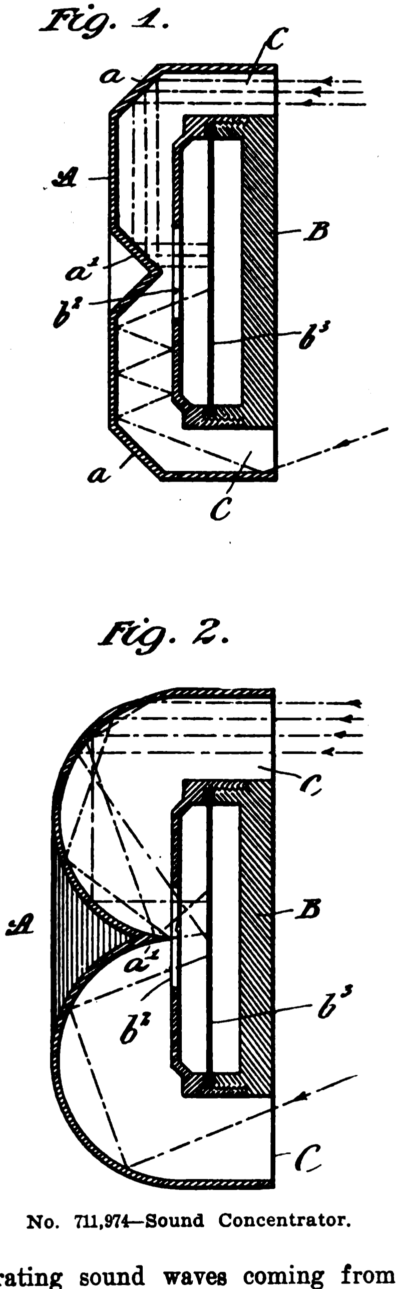

No. 711,974—Sound Concentrator.

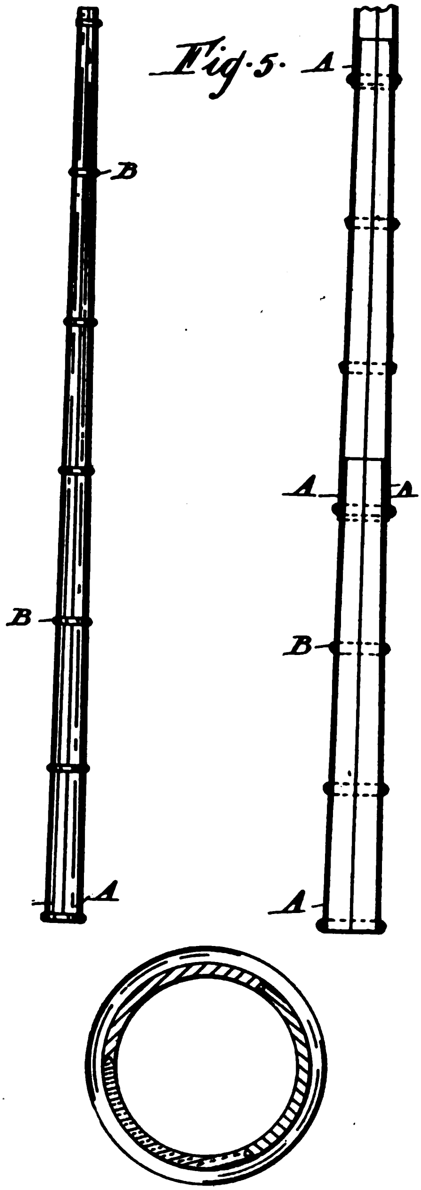

No. 714,568—Metallic Pole.

This patent is assigned to the Hutchinson Acoustic Co. of New York.

Digitized by Google

MEPHAN FERGUSON, MELBOURNE, VICTORIA, AUSTRALIA. No. 714,568, November 25, 1902. METALLIC POLE.

This is a metallic pole constructed of telescoping sheet metal lengths. Each tubular length is divided longitudinally into two or more sections, as shown in the drawings. Each section is pressed or bent into the proper form and provided at one edge with a tongue and at the other edge with a groove. These sections are then matched together and clamped in place by the rings B. The inventor claims that with this construction he is enabled to produce a very strong and rigid pole at a very low cost.

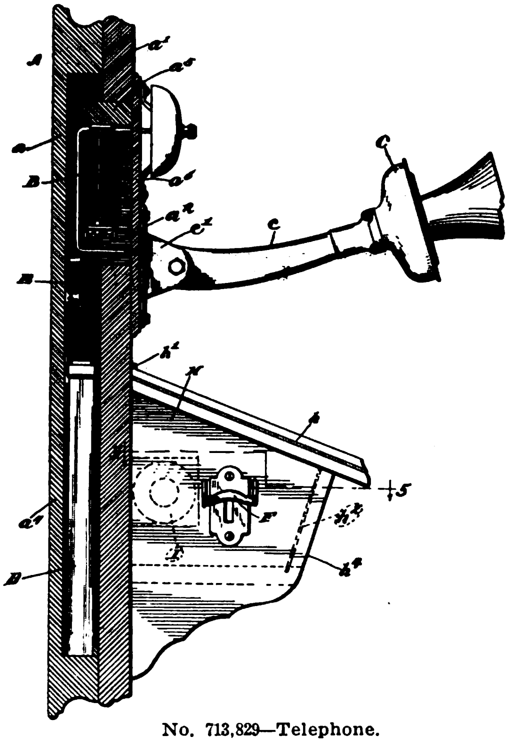

No. 713,829—Telephone.

ERNEST E. YAXLEY, CHICAGO, ILL. No. 713,829, November 18, 1902. TELEPHONE.

This is the well-known wall telephone of the American Electric Telephone Co. The back-board is composed of two hinge-connected sections adapted to be locked together flat-wise, and having between them a recess adapted to afford a chamber for the condenser, lightning arrester and bell ringer. Thus, although only of the ordinary thickness, it is made capable of concealing the greater part of the telephone apparatus. Another novel and desirable feature consists of the thin removable front wall h^2. This wall is slipped into grooves h^3, formed in the two side walls of the box which contains the hook-switch and induction coil. After lifting the hinged lid *h*, this front wall of the box can be readily removed or lifted out of place, so as to afford more convenient access to the switch-hook.

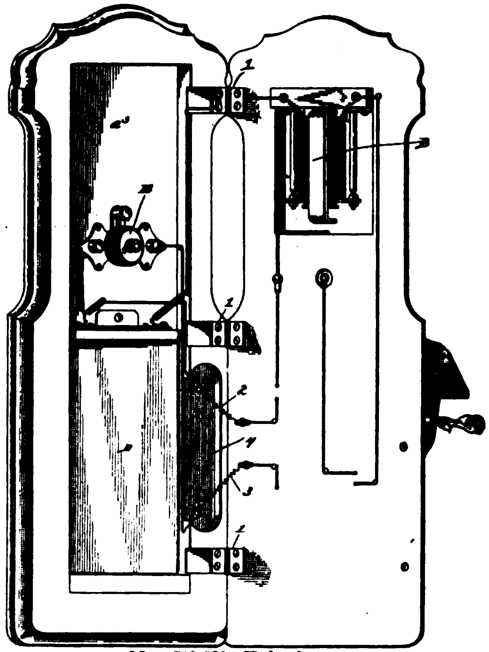

No. 713,829—Telephone.

The patent is assigned to the American Electric Telephone Co. of Chicago, Ill.

It is reported that the Great Northern is installing a telephone system along its lines in North Dakota and eastern Montana. The company says that it is merely experimenting in order to have a double protection through the blizzard district during the severe winter months.

Teacher (of juvenile class)—"Can any one tell me what a storage battery is?"

Small Tommy—"Yes, ma'am. Something that batters up furniture that's in storage."

Digitized by Google

DIRECTORIES

of

THE INDEPENDENT TELEPHONE ASSOCIATIONS.

Under the above title it is our intention to establish a department devoted to the movements and progress of the various Independent Telephone Associations, and the columns of the Telephone Magazine will be at all times open to the members of the different Associations for the discussion of matters of practical interest to those engaged in telephony. We ask the hearty co-operation of the secretaries of each Association, which we trust will be given. If every month each secretary will forward reports of meetings, changes in officers, new exchanges and other information which will be interesting to his fellow workers, the same will receive our prompt attention. Copy should reach this office not later than the 7th of the month.

The Independent Telephone Association of the United States of America.

President—James M. Thomas, New York, N.Y.
First Vice President—Hugh Dougherty, Bluffton, Ind.
Second Vice President—C. E. Stinson, Rochester, N. Y.
Third Vice President—W. H. Durin, Cedar Rapids, Ia.
Secretary and Treasurer——Jos. B. Ware, Detroit, Mich.
First Assistant Secretary—C. E. Wilson, Philadelphia, Pa.
Second Assistant Secretary—Ed. L. Barber, Wauseon, Ohio.
Third Assistant Secretary—T. B. Lee, Pittsburg, Pa.

ADVISORY BOARD.

James M. Thomas, New York, N. Y.
Hugh Dougherty, Bluffton, Ind.
H. D. Critchfield, Mt. Vernon, Ohio.
E. B. Fisher, Grand Rapids, Mich.
S. E. Wayland, Scranton, Pa.
S. P. Sheerin, Indianapolis, Ind.
E. E. Webster, Minneapolis, Minn.
H. C. Young, Columbia, Pa.

EXECUTIVE COMMITTEE.

Georgia—F. V. L. Turner, Atlanta.
Illinois—Thomas A. Marshall, Keithsburgh.
Indiana—Geo. F. Tier, Ft. Wayne.
Iowa—Henry E. Herr, Ottumwa.
Kentucky—J. A. Armstrong, Louisville.
Michigan—R. F. Johnson, Saginaw.
New Jersey—John J. Burleigh, Camden.
Florida—W. G. Brorein, Tampa.
Kansas—C. E. Wells, Marion.
Maine—L. A. Goudy, Portland.
Maryland—Frederick P. Boughton, Baltimore.
Missouri—H. L. Reber, St. Louis.
Massachusetts—Victor A. Sears, Boston.
Nebraska—Thos. E. Parmlee, Plattsmouth.
New York—C. L. Ingham, Buffalo.
Minnesota—C. H. Judson, Minneapolis.
Pennsylvania—C. W. Kline, Hazelton.
North Carolina—W. W. Shaw, Durham.
South Carolina—W. B. Moore, Yorkville.
Virginia—N. C. Watts, Staunton.
Texas—Mrs. Annie M. Brett, El Paso.
Wisconsin—A. L. Hutchinson, Weyauwega.
Ohio—Frank L. Beam, Columbus.

INTERSTATE INDEPENEDNT TELEPHONE ASSOCIATION.

Organized April 10, 1902.

Comprising the states of Illinois, Iowa, Indiana, Kentucky, Michigan, Minnesota, Ohio, Wisconsin.

OFFICERS.

President—C. E. Hull, Salem, Ill.
Vice President—L. A. Frazee, Connersville, Ind.
Secretary—E. M. Coleman, Louisville, Ky.
Treasurer—J. W. Layne, Carthage, Mo.

INDIANA MUTUAL TELEPHONE ASSOCIATION.

President—L. A. Frazee, Connersville, Ind.
Vice President—C. M. Zion, Lebanon, Ind.
Secretary and Treasurer—Harry B. Gates, Indianapolis, Ind.

SOUTHERN INDIANA TELEPHONE ASSOCIATION.

Third Annual, October 28-29, 1902.

OFFICERS.

President—G. A. Kienle, Huntingburgh.
Vice President—C. D. Knoefel, New Albany.
Secretary—E. W. Pickhardt, Huntingburgh.
Treasurer—T. M. Thom, Lamar.

OFFICERS.

IOWA TELEPHONE ASSOCIATION.

Annual Meeting Held at DesMoines, on the Second Tuesday in March.

President—U. S. Alderman, Nevada.
Vice President—Henry S. Herr, Ottumwa, Ia.
Secretary and Treasurer—Chas. C. Deering, Boone, Ia.

SOUTHEASTERN IOWA INDEPENDENT TELEPHONE ASSOCIATION.

October 1901, Third Annual.

OFFICERS.

President—Dr. H. S. Herr, Ottumwa, Ia.
Vice President—W. H. Fowler, Pella, Ia.
Secretary and Treasurer—Fred W. Kelley, Oskaloosa, Ia.

NORTHEASTERN IOWA INDEPENDENT TELEPHONE ASSOCIATION.

Organized November 18, 1902.

OFFICERS.

President—Victor Stevens, Dubuque, Ia.
Vice President—J. F. Van Voss, Independence, Ia.
Secretary and Treasurer—S. S. Lichty, Vinton, Ia.

THE NEW YORK STATE INDEPENDENT TELEPHONE ASSOCIATION.

Organized July 25, 1902.

OFFICERS.

President—Martin Carey, Buffalo, N. Y.
Vice President—C. E. Stinson, Rochester, N. Y.
Secretary—Chas. H. Blood, Ithaca, N. Y.
Treasurer—F. E. Lyford.

THE NEW YORK INDEPENDENT TELEPHONE ASSOCIATION.

Organized July 25, 1902.

OFFICERS.

President—Geo. R. Fuller, Rochester, N. Y.
First Vice President—Howard Hendrickson, Albany, N. Y.
Second Vice President—Boyd McDowell, Elmira, N. Y.
Secretary and Treasurer—Chas. O. Harris, Rochester, N. Y.

OHIO INDEPENDENT TELEPHONE ASSOCIATION.

OFFICERS.

President—J. M. Thomas, Cleveland, Ohio.
Vice President—D. J. Cable, Lima, O.

Digitized by Google

Second Vice President—C. Y. McVey, Youngstown, O.
Secretary and Treasurer—H. D. Critchfield, Cleveland, O.

MISSOURI RIVER TELEPHONE ASSOCIATION.

Organized April, 1902.
OFFICERS.
President—H. E. Ralston, Maitland, Mo.
Vice President—G. A. Haynie, Savannah, Mo.
Secretary and Treasurer—L. N. Fry, Grant City, Mo.

NEBRASKA INDEPENDENT TELEPHONE ASSOCIATION.

Third Annual, February 17-18, 1902.
OFFICERS.
President—Thomas E. Parmlee, Plattsmouth, Neb.
Vice President—I. D. Clarke, Papillion, Neb.
Secretary and Treasurer—E. C. Hansen, Fairbury, Neb.

SOUTHERN INDEPENDENT TELEPHONE ASSOCIATION.

Organized March 19, 1902.
Comprising the following states: North Carolina, South Carolina, Georgia, Florida, Virginia.
OFFICERS.
President—F. V. L. Turner, Atlanta, Ga.
Vice President—W. G. Brorein, Tampa, Fla.
Second Vice President—W. B. Moore, Yorkville, S. C.
Third Vice President—W. W. Shaw, Durham, N. C.
Secretary and Treasurer—P. D. Langdon, Augusta, Ga.

TEXAS, OKLAHOMA AND INDIAN TERRITORY INDEPENDENT TELEPHONE ASSOCIATION.

Organized July 18, 1902.
OFFICERS.
President—J. E. Boynton, Waco, Tex.
First Vice President—C. W. Roberts, Abilene, Tex.
Second Vice President—E. D. Nims, Roff, I. T.
Third Vice President—C. H. Duffy, Muskogee, I. T.
Secretary and Treasurer—J. B. Earle, Waco, Tex.

INDEPENDENT TELEPHONE ASSOCIATION OF WISCONSIN.

February 19-20, Third Annual.
OFFICERS.
President—Richard Valentine, Janesville, Wis.
Vice President—H. D. Slater, Waupaca, Wis.
Secretary and Treasurer—H. D. Winter, Madison, Wis.

KANSAS INDEPENDENT TELEPHONE ASSOCIATION.

Organized, January 28, 1902.
OFFICERS.
President—A. R. Champlin, Newton, Kan.
Vice President—B. F. Pankey, Topeka, Kan.
Secretary—C. E. Wells, Marion, Ia.
Treasurer—J. W. Smith, Minneapolis, Minn.

KENTUCKY TELEPHONE ASSOCIATION

Organized, November 2, 1898.
OFFICERS.
President—D. L. Pendleton, Winchester, Ky.
Vice President—H. K. Cole, Lancaster, Ky.
Secretary and Treasurer—James Maret, Mt. Vernon, Ky.

INDEPENDENT TELEPHONE ASSOCIATION OF MAINE.

Organized, October 19, 1901.
OFFICERS.
President—Maynard S. Bird, Rockland, Me.
Vice President—Geo. W. Q. Perham, Bryants Pond, Me.
Second Vice President—L. A. Goudy, Portland, Me.
Secretary and Treasurer—Sam'l T. White, West Paris, Me.

MICHIGAN INDEPENDENT TELEPHONE ASSOCIATION.

Organized, 21, 1897.
OFFICERS.
President—J. B. Ware, Detroit, Mich.
Vice President—R. B. McPherson, Howell, Mich.
Secretary—Chas. E. Brown, Alma, Mich.
Treasurer—R. F. Johnson, Saginaw, Mich.

MINNESOTA INDEPENDENT TELEPHONE ASSOCIATION.

Organized June, 1902.
OFFICERS.
President—Dr. J. H. James, Mankato, Minn.
First Vice President—Hon. James A. Tawney, Winona, Minn.
Second Vice President—J. J. Greaves, Glencoe, Minn.
Third Vice President—E. J. Bradley, Duluth, Minn.
Secretary—W. Howard Meers, West Concord, Minn.
Treasurer—Joseph Lockey, St. Paul, Minn.

INDEPENDENT TELEPHONE ASSOCIATION OF MAINE.

Organized October 19, 1901.
OFFICERS.
President—Maynard S. Bird, Rockland.
Vice President—Geo. W. Q. Perham, Bryants Pond.
Second Vice President—L. A. Goudy, Portland.
Secretary-Treasurer—Sam'l T. White, West Paris.

INDEPENDENT TELEPHONE MEETING.

There will be a meeting of the Independent Telephone Association of the state of Nebraska at the Lincoln hotel, in Lincoln, on Dec. 19 and 20, 1902, for the purpose of discussing matters of interest to Independent telephone companies, the construction and extension of toll lines and the protection of Independent telephone interests.

All persons interested in the Independent Telephone movement are urged to attend.

T. E. PARMELE, President. E. C. HANSEN, Secretary.

The Arlington Telephone company of Arlington, Ind., has been incorporated with a capital stock of $4,000. The incorporators are James M. Cross, Charles Sampson, John P. Downey.

Digitized by Google

FARMERS' PHONE LINES ARE PART OF FARMS.

Judge Smythe of the district court at Burlington, Iowa, has made a decision which is of wide interest and importance to farmers all over the country. He holds that a private telephone line, including poles, wires, etc., are fixtures, and therefore a part of the farm. The case was that of the Wapello Telephone company vs. the Louisa and Muscatine County Telephone company.

The contention of the plaintiff was that they had constructed a telephone line from the residence of Mr. N. R. Letts on his large stock farm to the town of Grand View, forming a connection with other lines, which plaintiff claimed constituted a telephone system belonging to them as co-partners. Mr. Letts sold his, the private line, to the Wapello Telephone company, and afterwards sold the farm to Brockaway & Sons without making any reservation on the telephone line. The Brockaways then sold the line to the Louisa and Muscatine County Mutual Telephone company, the defendants herein. The plaintiff then attempted to enjoin the defendants from using the line, contending the nature of the telephone system was sufficient notice to the purchaser of the farm that the line belonged to other parties, which is analogous with the corresponding rule of railroads and telegraph companies across a farm. Defendant insisted that the telephone line was a part of the realty and a fixture of the farm, because of its permanent character. This contention was adopted by the judge, who decided accordingly. The country throughout Iowa and adjoining states is dotted with these private telephone lines, and according to Judge Smythe's decision they belong as much to the farmer as do the fences on his farm which connect with the fences of other owners and form a continuous line boundary.

SATISFACTORY GROWTH.

President Herman Snow of the Blakesburg, Iowa, Telephone and Telegraph Company attended the convention and reports a somewhat remarkable growth of the independent lines in his section. The Blakesburg company was organized six months ago, 30 telephones being installed. There are at present 180 telephones to the board direct and by exchange with mutual farmer lines more than 200 others can be reached.

The Keystone Telephone & Telegraph Co. of Waterford, Pa., reports the recent completion of a rural line nine miles in length. The company also have contracts and will at once begin work on three additional rural lines, two of which will be more than ten miles in length. Business with the local exchange is constantly increasing, and taken as a whole prospects were never better.

Kansas City, Mo.—As the result of a recent order issued by the Kansas and Missouri Telephone company the telephone girls are forbidden to give patrons connection with any of the private exchanges in the city, unless the number of the exchange wanted is called for. Many of the large business houses and public institutions have a private exchange and a "central" girl, and in the past if anyone called up Armour's, or the Public library, for example, connection was at once given with the private exchange, whose "central" would at once connect with the number desired in the building. As a result of this recent order, however, one may ask for Armour's, or The Star, as the case may be, in vain. The patron must get the exact number out of the telephone book and call for it.

Alonzo Burt, general manager of the telephone company, says the rule was made to increase the efficiency of the service. Mr. Burt says that when there were but a few private exchanges in the city the girl operators could readily memorize all their numbers, but that now there are so many private exchanges that it has proven too great a tax on their memories. Mr. Burt says the new rule will expedite the general service.

The Stromberg-Carlson Telephone Manufacturing company, Rochester, N. Y., with a capital stock of $3,000,000, was licensed to transact business in Illinois, with a state capital of $250,000.

Digitized by Google

TRADE NOTES.

By some curious train of thought many people have arrived at the conclusion that the construction of a telephone is altogether a very easy thing.

How directly opposed to the facts such an idea is could not be better illustrated than by a tour of inspection of the new immense plant of the Kellogg Switchboard and Supply Company at Green and Congress streets.

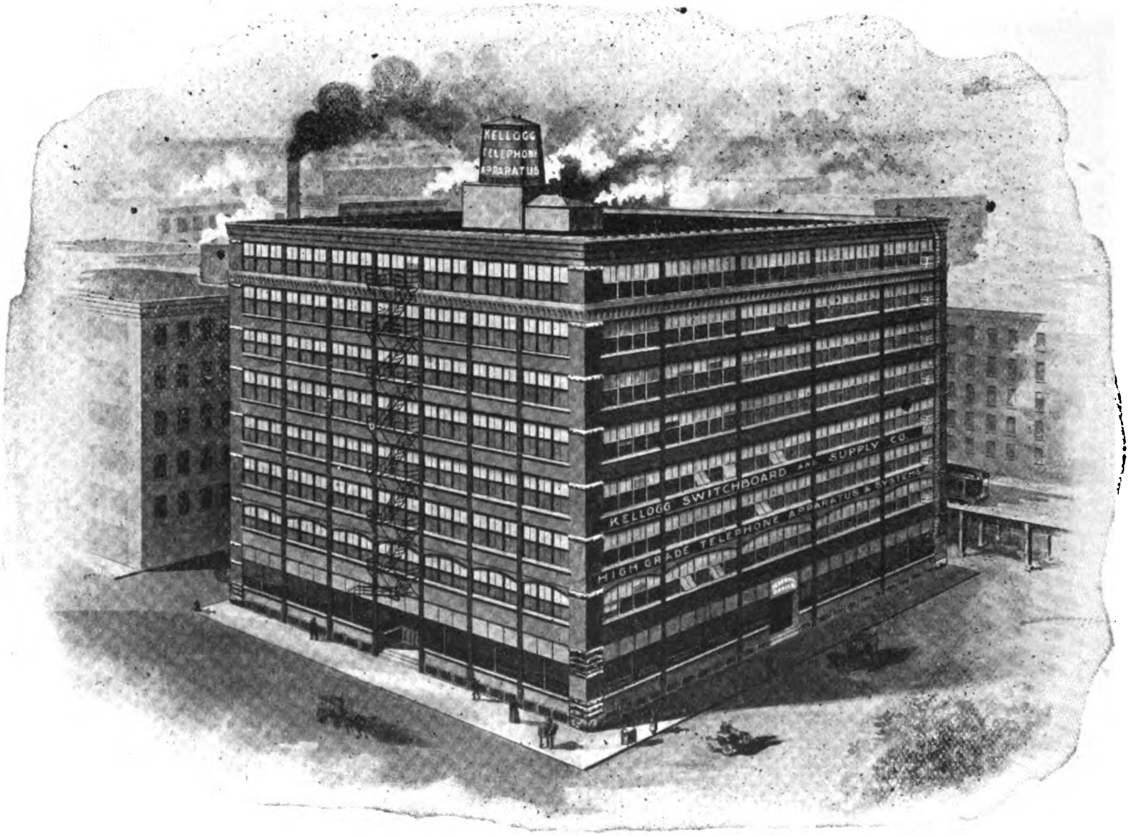

Kellogg Switchboard and Supply Company.

This huge building, considered the largest and finest independent telephone factory in the world, is teeming with interest.

The building is eight stories in height. Stop at any floor and you will find enough to interest you an entire day.

Quality of material and workmanship receive more attention than the quantity of goods gotten out.

Among the many handsome private switchboards now being exhibited is a duplicate of one recently installed in the Department of Agriculture at Washington.

The cabinet of this board is of finely finished mahogany, in which apparatus for 60 line circuits is located, connections to the distributing frame being 21 pair switchboard cable soldered directly to the line jacks.

The distributing frame is of the combined type, being provided for jumpering the lines and mounting the protection apparatus, which latter is of an improved type of carbon, block, lightning arrester and sneak current protector.

The jumpering is done with flame-proof jumper wire.

The power plant for supplying all current used in operating the exchange and subscriber's instruments is complete in every detail, consisting of a duplicate set of "Chloride Accumulator" storage batteries arranged to be charged by a Holtzer-Cabot

Digitized by Google

combined charging and ringing machine, a power board of marble, mounted in an iron framework and provided with necessary instruments and switches for operating the power plant. The Kellogg Switchboard and Supply Co. furnished all apparatus and installed the plant complete, ready for service, including outside construction and connecting of subscriber's instruments.

E. E. Yaxley of the Monarch Telephone Manufacturing Company announces the issuance of the Monarch Bulletin No. 2 in a few days. It will be an artistic and concise catalogue of telephones and telephone parts made and sold by the Monarch company.

Mr. E. R. Harding of Chicago, western manager for the Holtzer-Cabot Company, reports the recent completion of a new magnet by his company. The magnet is for use in magneto telephones. By following an original and long studied method of construction the company has produced a magnet which under test discounts former efforts. It is claimed that a four bar magnet of the new style has the strength of a five bar of the old; that the three bar of the improved has strength equalling that of the four as previously made.

The Standard Pole and Tie Company, 44 Broad street, New York, reports the recent shipment of 300 poles to the Mysore State Gold Mining Company of Madras, India. The company has recently purchased 7,000 acres of Florida Heart pine in Hernando county, Fla. Three car loads of crossarms can be turned out per day from the southern mill. The Juniper poles come from North Carolina, where the company owns many acres of the uncut timber. Last year 40,000 Juniper poles were sold in the middle west.

The first Underground Cable System installed in the state of South Dakota is now being placed by the Capital City Telephone Co. of Pierre. Mr. W. S. Rowe, general manager, is quite busy making these extensive improvements. He is reconstructing the exchange and cabling all the central portion of the city. He is also installing an entire new central office equipment, which equipment is of the manufacture of the Eureka Electric Co. of Chicago, and Mr. Rowe states it is his firm determination and intention that the service in the exchange at Pierre shall be the best in the state. With this end in view he has purchased an entire new equipment of the well-known manufacturers of Eureka apparatus,—the Eureka Electric Co. of Chicago.

The Standard Underground Cable Co. have completed the erection of the largest and most modern plant in this country for rolling copper rods, drawing all sizes and shapes of bare wire, and insulating weatherproof wires and cables. This plant is an addition to their large underground cable factory and rubber insulated wire and cable factory at Perth Amboy, N. J.

The rod mill was started successfully on November 25, and the wire mill December 1.

They are now prepared to furnish bare rods and wire in any quantities, the capacity of the rod mill being 3,000,000 pounds per month and the wire mill 2,000,000 pounds single turn.

The weatherproof factory will be in full operation by February 1, 1903, with a capacity of 500,000 pounds of wire and cables per month, working single turn.

The sales department staff has been largely added to, on account of this new departure and the general increase in business.

The general sales department with headquarters in Pittsburg, together with the branch office managers at New York, Philadelphia and Chicago, remain the same.

Mr. A. B. Saurman, who has represented the company in Boston for the past few years, goes to San Francisco, where he is associated with Mr. C. F. Sloane, the Pacific coast sales agent of the company, Mr. Saurman devoting his attention exclusively to the interest of the company on the coast.

The Boston office is now in charge of Mr. Frank Clark Cosby, formerly the company's representative in St. Louis, and latterly connected with the sales de-

Digitized by Google

partment of the W. E. & Mfg. Co. in New York city.

The New York office force is augmented by the presence of Mr. H. P. Kimball, formerly with the Williamsport Electric Co.

Mr. R. M. Hirst, for several years connected with the Philadelphia office, will devote most of his time to the trade in the territory covered by the Philadelphia office.

The Pittsburg office will have two men constantly on the road, Mr. A. A. Anderson, who has been with that office for several years, and Mr. McBride, formerly with the Pittsburg Reduction Co.

Mr. J. R. Wiley at the Chicago office will be assisted by Mr. E. J. Pietzcker, formerly with the American Steel & Wire Co.

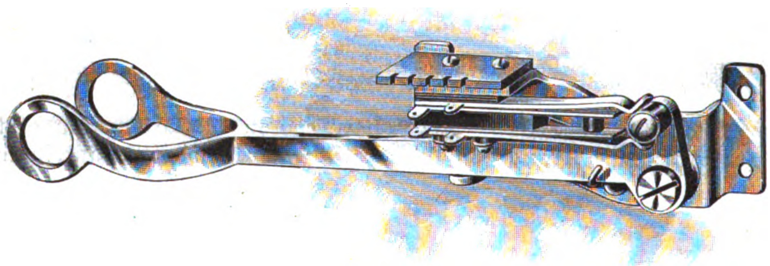

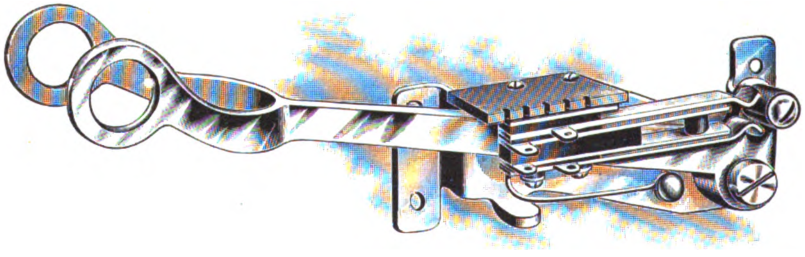

A NEW HOOK-SWITCH.

In Figs. 1 and 2 are shown views of a new hook-switch recently placed on the market by the Stromberg-Carlson Telephone Manufacturing Co. of Chicago.

The hook is of the long lever type and mounted on a heavy brass frame, fastened with bolt and nut. The hook lever forms no part of the circuit, but all contacts are made by the springs mounted upon the lug on the side of the frame, as shown. The downward movement of the hook causes a hard-rubber insulated pin, attached to the lever, to be drawn in between the springs, thus disengaging the springs and breaking contact, as shown in Fig. 2, and making contact when the hook is released, as in Fig. 1. A stop is provided at the lower edge of the frame to prevent the downward movement of the lever, below the proper point. The springs are made of German silver of good length, and all contacts are pure platinum; pure hard-rubber strips are used to insulate the springs from each other and the frame. At the top of the lug, upon which the springs are mounted, is fastened a strip of hard fiber with the front edge slotted, through which the wires are brought down to the springs, thus keeping them separated and reducing the chances of short-circuiting to a minimum.

The Harloe Insulator Co. of Hawley, Pa., are placing upon the market their latest invention—a Self-Tying Insulator—which they claim is vastly superior to the present style of insulators.

The McRoy Clay works, of Brazil, Ind., manufacturers of conduits, instead of circularizing their mailing list in the good old way, now send out an attractive blotter each month.

Digitized by Google

In addition to an attractive "ad" and monthly calendar a space on each one is devoted to a short poem.

The following poem appeared on the December blotter and is particularly appropriate:

AT THE 'PHONE.

Maud Muller, on a summer's day,
Called, "Number, please?" to earn her pay?
Before her, numbers, printed small,
Fell down when any one would call.
The Judge took down his office 'phone,
And made to Maud his wishes known.
Said he, "I'll ask you just once more,
For four-eleven-forty-four."
Said Maud, as mild as summer seas,
"What number did you ask for, please?"
Said he, "I told you twice, before,
It's four-eleven-forty-four."
Said Maud, and you could hear her smile,
"Just hold the 'phone a little while."
A weary interval ensued,
The wires hummed an interlude.
And broken bits of talk came o'er
The 'phone, and made the waiter sore.
The wishbone-shaped receiver hook
He seized upon and wildly shook.
Till Maudie's voice he heard once more,
"What number are you waiting for?"
The Judge responded with a roar,
"It's four-eleven-forty-four."
Serenely Maud made answer then,
"That line is busy; call again."
The Judge had business late that day,
And so he merely walked away.
But as he walked he shook his head,
And this is what he sadly said:
"Of all the words of tongue or pen,
The d——dest are, 'Busy; call again.'"

—*Selected.*

The Fisk-Newhall Telephone Mfg. Co. have removed from 171 South Canal street to 166-172 South Clinton street. A desire for more room and better facilities for handling the increasing business caused the removal.

The company are encouraged over the outlook for the 1903 business and predict that they will have more business than they can handle.

"Polishing Cream," a cream especially adapted to cleaning switchboards and telephones and used and endorsed by the leading manufacturers, is being placed on the market by the manufacturer, Frank J. Lamberson of 173-175 South Clinton street, Chicago. Mr. Lamberson sends a sample bottle to anyone mentioning the TELEPHONE MAGAZINE.

The Chicago Fuse Wire & Mfg. Co. of Chicago, Ill., annouces that they have installed at 187 Pratt street, Buffalo, N. Y., in connection with the Union Mfg. & Specialty company, a complete equipment for the manufacture of their well-known lines of fuse wire, fuse strip, fuse links and telephone and telegraph specialties.

This move has been occasioned on account of the steady growth of their business and a desire on the part of the company to do everything in their power to give the best service to their customers in all sections of the country.

The headquarters of the company will remain at Chicago, but the eastern factory at Buffalo will be in charge of competent men who are thoroughly trained in the details of the business.

Mr. W. R. Goodman, secretary of the Chicago Fuse Wire & Mfg. Co. further states that their new plans contemplate extensions in their field of work.

The Western Telephone Manufacturing Company has purchased the property formerly operated and controlled by the Western Telephone Construction Company. The latter company was one of the pioneer independent manufacturers, which fact, combined with the strength of the new organization, promises great things for the future. The officers are as follows: A. E. Ziehme, president; F. W. Pringle, vice president; J. C. Kavanaugh, treasurer; G. Hallett Johnson, secretary; H. S. Pringle, superintendent, and J. E. Keelyn, superintendent of sales department. The factory is located at Winthrop Harbor, Ill. A 200 drop switch board exhibited at the convention was manufactured for Dowie's Zion City.

Gainesville, Texas.—The city council has granted a franchise for an Independent telephone company and the lines will be constructed as soon as possible.

Digitized by Google

DELIVERY OF TELEPHONIC MESSAGES

It may not be generally known that the postoffice has made arrangements in those districts served by its telephone system for delivering telephonic messages at their destinations in the same way as a telegram, and at half the telegraphic rate. Only those having a private telephone, however, can avail themselves of this facility, and thirty words seem to be the maximum for an ordinary message, which can be delivered by express within a radius of one mile of the receiving office for a charge of 3d over and above the usual charge for a call. The postoffice telephone scheme contemplates the establishment of a call office at practically every branch postoffice in London within a few months, and there is little doubt but that the above arrangement will readily be taken advantage of by the subscribers to the system. In the same way the trunk lines can be used for this purpose, the only additional charge being 3d a mile for the delivery of the message. When the postoffice have completed their metropolitan system, it is conceivable that in some cases it will be found more expeditious to telephone messages to non-subscribers than to use the telegraph, and owing to the limits placed on the length of a telegraphic message, it should certainly prove more economical.—*Electrical Engineer*, London.

The new plant of the Home Telephone company of South Bend, which recently opened for business, is proving very satisfactory, everything having been constructed of the best material and with the greatest care. The company is busily engaged in putting in a large number of new 'phones and the outlook for the plant is exceedingly bright.

Buffalo, N. Y.—Stockholders of the Independent Union Telephone company held a meeting and elected a board of directors for the ensuing year. It was voted to increase the capital stock of the company from $200,000 to $1,000,000. The company's purpose in doing this is to secure funds with which to build long distance lines. The directors were elected as follows: Samuel B. Rawson of Elyria, O.; George H. Frost of Buffalo, Dr. W. R. Campbell of Niagara Falls, Judge A. R. Smith of Tonawanda, and I. H. Griswold, F. W. Martin, A. E. Lord, F. H. Sudro and T. M. Brush, all of Elyria.

Des Moines, Iowa.—Articles of incorporation of the Great Northern Telephone company have been filed in the office of the secretary of state. The company is capitalized at $25,000. The incorporators are J. A. Peters, C. J. Thompson, H. R. Irish, J. Jacobs, O. A. Olson, J. Thompson and Willard Secor, all of Forest City.

Rogers City, Mich.—The Clark telephone system is about completed. This is as fine a system as there is in the state. The system is connected with Onaway, Cheboygan and Metz, and will eventually be connected with Alpena. Rogers also has one of the finest school houses in the state. These are two great improvements for Rogers City this year.

Attleboro, Mass.—The Taunton Telephone company is making arrangements to extend its line from Taunton through Norton, Mansfield and Attleboro, and intends to combine these four places into one big district, which will be managed like the Providence district of the Providence Telephone company.

WANT ADVERTISEMENTS.

Want advertisements not exceeding twenty words, exclusive of address, will be inserted in these columns for 50 cents each. If over twenty words the rate will be 2½ cents per word.

WANTED—Situation as exchange manager with progressive Independent company. Five years' experience in general telephone work with Bell Company. Address X Y Z, care of Telephone Magazine.

WANTED—Engineering work of all kinds in the west. Experienced telephone engineer seeks employment. Address S. B., Telephone Magazine.

FOR SALE—Second-hand telephone apparatus of all kinds. Prices reasonable. Address A. B. C., Telephone Magazine.

WANTED—Telephone men in all sections to act as correspondents. Address Ferguson, Telephone Magazine.

Digitized by Google

SEEK THE BEST, SHUN THE REST

The Long Nose, Needle Point, Side Cutting Plyer is Good to Sell— Good to Buy.

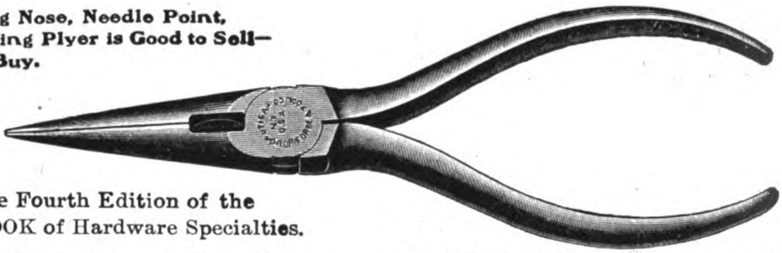

Used for Fine Instrument, Switchboard and Repair Work.

Send for the Fourth Edition of the GREEN BOOK of Hardware Specialties.

UTICA DROP FORGE & TOOL CO.
Manufacturers of Nippers and Plyers.

SMITH & HEMENWAY CO.
Mfrs. of Cutlery and Hardware Specialties.

296 BROADWAY, NEW YORK CITY.

AN ERICSSON ?

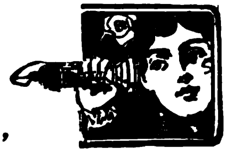

YES, AND IT IS "STANDARD OF THE WORLD"

Switchboards of all sizes; telephones for all uses and full exchange equipment. We help new companies to start right and old exchanges to improve.
We can interest you. Write for particulars.

ERICSSON TELEPHONE CO., 296 Broadway, NEW YORK CITY.

RELAY SHELLS

We are supplying them in large quantities for progressive manufacturers. Companies installing central systems, covering thousands of subscribers, use them. They are drawn from stock make in our own Steel Mill.

We also make

MAGNET CORES

of a superior quality of Norway Iron thoroughly annealed.

Inquiries solicited.

Samples of work to responsible concerns.

FEDERAL MFG. CO.
THOMPSON FACTORY,
CHICAGO, ILL.

IWANS' PATENT IMPROVED Post Hole AND Well Auger

THE BEST IN THE WORLD. The 10 and 12-inch are especially adapted for telephone and telegraph post holes.

WEST BEND, IOWA,
June 19th, 1902.

GENTLEMEN:—In reply to your letter of June 7th, will say that we have two of your 12-inch Patent Post Hole Augers, and we are well pleased with them. Two men can bore from 50 to 60 five-foot holes a day with each auger. Please ship us one more 12-inch auger at once, and oblige. Yours respectfully,
WEST BEND TELEPHONE CO.

They will Save you Time and Money in your Construction Work and Give Satisfaction in All Kinds and Under All Conditions of Soil. : : : : :

FOR SALE BY HARDWARE AND IMPLEMENT JOBBERS AND DEALERS.

Write for Prices and Circular of our complete line of post hole augers and diggers.

Manufactured Exclusively by

IWAN BROTHERS
Box 104, Streator, Ill.

Digitized by Google

Nungesser Primary Batteries.

Our improved No. 4, 300 ampere-hour Closed Circuit Battery is the most powerful battery of this class. It is put up in both glass and porcelain jars. This battery is very largely used for telephone exchange service, central energy systems, gas and gasoline engine ignition, railway signals, etc.

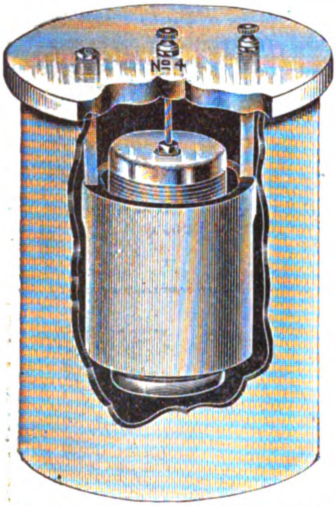

No. 4—SIZE 5½ in. dia. x 7½ in. high.

THE 1900 DRY BATTERY

Is manufactured Expressly for Telephone Exchange Service. In every comparative test made within the past four years, the 1900 Dry Battery has proven its superiority over all other dry or wet batteries. This battery has shown, in many of the most progressive telephone exchanges in this country, over there years' continuous service without attention of any kind. They are now more largely used than all other dry or wet batteries combined. ——

OUR PRICES ARE THE LOWEST.

SIZE. 2½ in. dia. x 6 in. High.

MANUFACTURED BY THE

Nungesser Electric Battery Co.,

CLEVELAND, OHIO, U. S. A.

Western Representative, THOMAS G. GRIER, 126-130 Jackson Boulevard, Chicago, Ill.

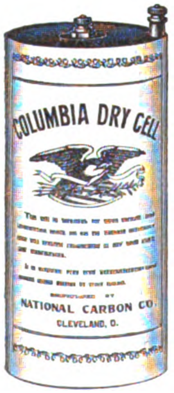

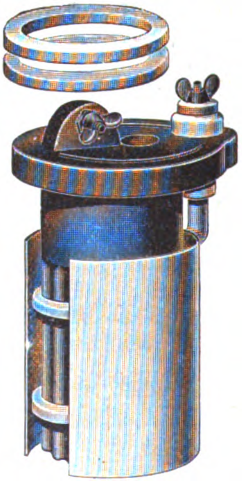

The Columbia will do more work, last longer, and give better satisfaction than ANY other dry cell.

The same is true of the National No. 2 Cell, compared with other wet cells.

With our cells you can better your service, and cheapen cost of maintenance. Write for prices and particulars.

LOCK DRAWER "L"
CLEVELAND, OHIO

National Carbon Co.

Digitized by Google

$4.50 VICTOR DESK STAND

WITH

Transmitter and Receiver

WHILE THEY LAST

VICTOR DESK STAND COMPLETE WITH GENERATOR BELL AND BATTERIES - - - - $9.00

VICTOR TELEPHONE WORKS

203-207 So. Canal St., Chicago, Ill, U. S. A.

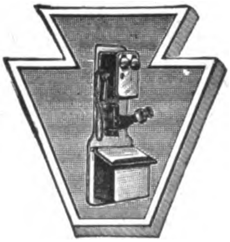

Keystone Electric Telephone Co.

MANUFACTURERS OF HIGH-GRADE

TELEPHONES AND SWITCHBOARDS

TOLL LINE EQUIPMENT

Exchanges Equipped in Every Detail

WRITE FOR PRICES

Office and Factory, 565 Old Ave., PITTSBURG, PA.

Please mention TELEPHONE MAGAZINE in writing to advertisers.

Digitized by Google

DIPLOME DE GRAND PRIX

Awarded to the Telephone Magazine at the Paris Exposition in 1900, it being one of the Nineteen American Journals and Magazines that made a collective exhibit.

Digitized by Google

Telephone Magazine

Have you Renewed Your Subscription For 1903?

Telephone Magazine

Digitized by Google

CONTENTS.

Report of Inter-State Independent Telephone Association's Convention, . 225
Address of Welcome—Hon. L. H. McGann, ... 225
Opening Address—President Raney, ... 226
Secretary's Report—Sec'y E. M. Coleman, ... 229
"Rates—Measured Service"—Geo. N. Bandy, ... 242
"The Sliding Scale of Rates for Exchanges"—Dr. H. S. Herr, ... 244
"Toll Rates"—H. H. Robinson, ... 246
"Restrictions by Municipal Authority with a Synopsis of the Law."
Ohio—W. F. Lauback, ... 248
Iowa—U. S. Alderman, ... 252
Michigan—J. B. Ware, ... 253
Indiana—Mr. Pickhardt, ... 254
"Settlement of Toll Business Between Connecting Companies"—A. L. Hu ch-inson, ... 257
"Independent Telephone Securities as an Investment"—From a Banker's Standpoint—Col. J. D. Powers, ... 260
"From a Small Investor's Standpoint"—J. H. Layne, ... 262
"Methods of Improving Long Distance Telephony"—C. E. Hull, ... 264
Banquet 266
Among the Exhibitors, ... 267
Editorial, ... 271
E. M. Coleman (sketch) 272
Afterthoughts, ... 273
Pete's Pipe Lines, ... 274
Digest of Telephones and Kindred Patents—Arthur T. Durand (illustrated) . 277
Directories Independent Telephone Associations, ... 293
Farmers 'Phone Lines Are Part of Farms, ... 295
Trade Notes, ... 296

INDEX TO ADVERTISEMENTS.

	PAGE
American Electric Telephone Co.—Telephones	XIII
American Electric Telephone Co.—Selective Signal Telephones	XII
Bulkley, Chas. C.—Patent Lawyer	XVIII
Chicago Insulated Wire Co.—Bare and Insulated Wires	XIV
Conley Foil Company—Tin Foil	XI
Connecticut Insulating Wire Co.—Magnet Wire	II
Cook, Frank B.—Protective Apparatus	IV-V
Crawfordsville Wire & Nail Co.—Telephone Wires.	II
Croselmire & Ackor—Refiners	II
Electrose Manufacturing Co.—Telephone Specialties	II
Electric Storage Battery Co.—Accumulators	XVIII
Electricity (London)—Newspaper	XVIII
Ericsson Telephone Co.—Microphones	XV
Farr Telephone & Construction Supply Co.—Telephone Supplies	VIII-IX
Federal Manufacturing Co.—Relay Shells	XV
Gordon Battery Co.—Batteries	XI
Illinois Electric Specialty Co.—Pole Changers	Cover
International Telephone Mfg. Co.—Telephones	VI
Iwan Bros.—Post Hole and Well Augers	XV
Jukes & Shafer—Japanners	II
Keystone Electric Telephone Mfg. Co.—Telephones.	XVII
Klein, Mathias & Son	X
Lamberson, Frank J.—Polishing Cream	II
Menominee Electric Mfg. Co.—Magnato Generators	Cover
McDermid Mfg. Co.—Magnet Wire	XI
National Carbon Co.—Batteries	XVI
New York Insulated Wire Co.—Rubber-covered Wires and Cables	XIV
Northwestern Tel. Mfg. Co.—Telephones	XVII
Nungesser Electric Battery Co.—Batteries	XVI
Okonite Co., Ltd	XIV
Plume & Atwood Mfg. Co.—Brass, Copper and German Silver	XVIII
Roth Bros. & Co.—Power Apparatus	XI
Royal Trust Company	XVIII
Situations Wanted	
Standard Underground Cable Co.	XIV
Speer Carbon Co.—Carbon Specialties	II
The Calculagraph Company—the Calculagraph	III
The Kents Express & Teaming Co.—Heavy Teaming	X
The Smith & Hemenway Corp.	XV
Utica Drop Forge & Tool Co	IX
Victor Telephone Works—Desk Stands	XVII
Weston Elec. Instrument Co.—Testing Instruments	III

Digitized by Google

WE ONLY MANUFACTURE AND SELL

MAGNETO GENERATORS

To Telephone Manufacturers Only

BUT

We Sell More of Them Than Anyone Else In The Business and Positively

GUARANTEE EVERY ONE WE SELL

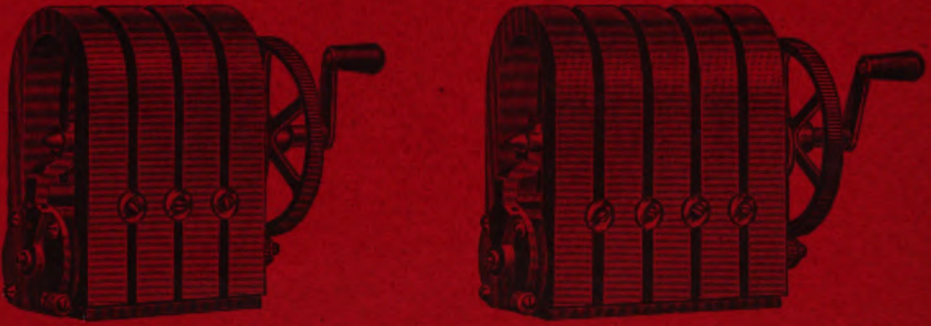

EXCHANGE OWNERS SHOULD ALWAYS SPECIFY A MENOMINEE GENERATOR WHEN ORDERING MAGNETO TELEPHONES

And Your Signaling System Will be Perfect.

Remember the name *MENOMINEE*

MENOMINEE ELECTRIC MFG. CO.

MENOMINEE, MICH.

Digitized by Google

You Should SEE IT

WHAT'S IT?
THAT'S IT!

The I. E. S. Pole Changer.

Our Patents all Allowed. Guaranteed free from infringement and warranted to give satisfaction. Additional particulars upon request.

Illinois Electric Specialty Co.

170 E. Madison Street
CHICAGO

Digitized by Google

Digitized by Google

Digitized by Google

Digitized by Google

Digitized by Google

Stanford University Libraries
3 6105 010 180 789

STANFORD UNIVERSITY LIBRARIES
CECIL H. GREEN LIBRARY
STANFORD, CALIFORNIA 94305-6004
(415) 723-1493

All books may be recalled after 7 days

DATE DUE

FEB 15 1995

FEB 21 1995

Digitized by Google

Digitized by Google